Ecological No Net Loss Assessment Report

Prepared for

Weyburn HOA
8392 SE 50th Place
Mercer Island, WA 98040

Prepared by

Northwest Environmental Consulting, LLC

Northwest Environmental Consulting, LLC
600 North 36th Street, Suite 423
Seattle, WA 98103
206-234-2520

January 2022

Purpose

The purpose of this report is to fulfill the requirements of City of Mercer Island Municipal Code (MICC) 19.07.110 Shoreline Master Program by assessing overall project impacts and proposed mitigation to determine if the project meets the “No Net Loss” General Regulation of the Shoreline Master Program.

No Net Loss is defined as “An ecological concept whereby conservation losses in one geographic or otherwise defined area are equaled by conservation gains in function in another area.”

Permits are being applied for a dock extension and repair.

Location

The subject property is located at 8392 SE 50th Place (King County parcel number 4217402325) in the City of Mercer Island, Washington (see Appendix A – Sheet A1.0). The parcel is on the waterfront of Lake Washington, a shoreline of the state, that contains several endangered fish species listed under the Endangered Species Act and Washington State designated priority fish species.

Project Description

The work on the dock will include removal of an existing finger pier and reducing the existing dock from 5-feet-10-inches wide to 3-feet-10-inches wide within 30 feet of the shore. Two new 2-feet-10-inch by 29-feet-10-inch finger piers will be added waterward of the existing ell. In addition the existing 5-foot-10-inch wide ell will be extended 10 feet. The existing decking will be removed and replaced with grated decking using ThruFlow decking so that all deck surfaces are grated.

Pile work will be required to complete the work. The proposal includes removing 6 existing structural timber piles (1 8-inch, 2-10-inch, and 3 12-inch piles) and 3 mooring piles (2 8-inch and 1 10-inch). To complete the work, 28 existing piles will be repaired. The first 30 feet of dock will require the addition of 3 8-inch steel piles. The extensions will require the addition of 8 8-inch steel piles. Project drawings are included in Attachment A, sheets A2.0 to A7.0

During construction, a floating boom will surround the work barge and dock. (See Appendix A – Sheets A6.0)

A shoreline vegetation plan is proposed, that will add 2 native trees and 3 native shrubs. These shoreline plantings will provide shade and allow allochthonous material to enter the lake along the shoreline and improve shoreline conditions (see Appendix A – Sheet A7.0).

Approach

Northwest Environmental Consulting LLC (NWEC) biologist Brad Thiele conducted a site visit on January 20, 2022 to evaluate conditions on site and adjacent to the site. NWEC also consulted the following sources for information on potential critical fish and wildlife habitat along this shoreline:

- Washington Department of Fish and Wildlife (WDFW): Priority Habitats and Species online database (http://apps.wdfw.wa.gov/phsontheweb/)

- WDFW SalmonScape online database of fish distribution and ESA listing units (https://apps.wdfw.wa.gov/salmonscape/)

- Mercer Island GIS online database (https://chgis1.mercergov.org/Html5Viewer/Index.html?viewer=PubMaps&viewer=PubMaps)

Site Description

The subject property is a shoreline tract owned by HOA in a residential neighborhood. It has shoreline on its western boundary with single-family homes to the north and south along the shoreline and waterward of the parcel.

The only existing structures on the property are an open sided hut and the existing wood decked dock.

The shoreline is bulkhead with lawn and a gravel strip landward of the bulkhead. A sand and gravel beach cove is present on the north shoreline. A laurel shrub and shore pine are present along the south shoreline and various other ornamental vegetation is present.

The substrate of the lake is sand and gravel shifting to sand about 20 feet from shore. No aquatic vegetation was observed at the time of the site visit.

The neighboring properties include armored shoreline and similar vegetation. See attached photos.

Species Use

WDFW's PHS mapping and SalmonScape mapping tools show the following salmonid species using Lake Washington for migration and/or rearing: residential coastal cutthroat (*Oncorhynchus clarkii*), winter steelhead (*O. mykiss*), Dolly Varden/bull trout (*Salvelinus malma*), sockeye salmon (*O. nerka*), fall Chinook (*O. tshawytscha*), coho salmon (*O. kisutch*), and kokanee (*O. nerka*). The SalmonScape database maps the site as accessible to the Endangered Species Units (ESU) of Threatened Chinook and steelhead. Juveniles migrate and may rear in the waters near the project when traveling from spawning sites on other lake tributaries to the lake's outlet at the Hiram M. Chittenden Locks. The project site is accessible to any fish migrating or rearing in the lake. The shoreline is not mapped as a sockeye salmon spawning location.

Priority Habitats and Species mapping does not show any other aquatic or terrestrial occurrences within 1,500 feet of the project location.

The Mercer Island GIS does not show any environmental layers at the location, a watercourse is mapped as occurring about 100 feet to the south of the project and will not be affected.

Project Impacts and Conservation Measurements

Direct Impacts:

Sediments: Sediment disturbance will occur below the OHWM and along the shoreline of Lake

Washington during pile installation and removal. Additionally, the tug and barge propwash may disturb sediments temporarily when making trips to/from the site.

Impacts to sediments should be minimal from pile work and the project actions are not expected to exceed State Water Quality Standards.

Shoreline: Planting additional native vegetation, especially a native cedar tree and native willow trees, will increase the habitat functions of the shoreline by creating shade along the shoreline that will be an improvement from the existing baseline habitat conditions at the project site. These plants will provide overhanging cover for fish, structural diversity for birds and wildlife, detritus for aquatic invertebrates and long-term recruitment of woody material and other allochthonous food sources. The proposed planting plan is included (see Appendix A - Sheet A7.0).

Lakebed: The proposed project will add 11 8-inch diameter steel piles and remove 3 8-inch, 3 10-inch, and 3 12-inch timber piles. This will result in restoration of 1.2 square feet of lakebed.

Noise: Construction equipment will create noise audible to neighbors and in-water. Noise disturbance will be short-term and should have negligible effects on fish and wildlife in the area. Work will be completed during the in-water work window when juvenile fish are not expected to be present.

Potential spills: Short-term risks include the potential for petroleum spills that can occur with any equipment operation. The level of impact to the aquatic environment is expected to be reduced because a crew competent using spill containment measures will be on site and employ these measures should a spill occur.

Indirect Impacts:

Shading: The proposed configuration will result in an increase of 117 square feet of nwt overwater coverage from the addition and removal of area from the dock. The existing solid wood decking will be replaced with grated ThruFlow decking.

Grated decking allows more light to penetrate the water below a dock that can increase productivity in the littoral zone below the dock and reduce the full shade favored by salmonid predators. Salmonid predators are known to use hard shadowing under solid-decked docks to ambush juvenile salmonids. Reducing these hard shadows limits predation opportunity caused by hard shading under the dock.

ThruFlow grated decking has a measured performance at 43 percent light penetration (ThruFlow, 2020). Thus, effective cover of the area is 57% of the area of a solid decked structure. Table 1 provides a summary of effective coverage:

Table 1 – Effective coverage

	Solid decking	Proposed grated	Conversion	Effective coverage	Reduction in coverage
Existing after removal (SF)	819	819	0.57	467	352
Extension (SF)	0	226	0.57	129	97
Total (SF)	209	1045		596	449

The use of grated decking reduces the proposed overwater coverage by 449 square feet. The extension will add 129 square feet of effective overwater coverage. This new coverage is being configured in water 7 to 9 feet deep and will start about 90 feet from shore. Reconfiguring moorage into deeper water and removing moorage within 15 to 20 feet of shore will reduce the chances of propwash during docking and castoff. In addition, the proposal removes 109 square feet of overwater coverage from the nearshore where overwater coverage is thought to be the most impactful to outmigrating juvenile salmonids.

Recreational Boating: The project supports continued recreational boating, which has been identified as a limiting factor for salmonid populations in Lake Washington. The pier will not introduce additional boating to Lake Washington, as the owners could still access the lake from a public boat launch or private moorage facility.

Other Conservation measures:

Work window: The work will be completed during the prescribed in-water work window for this area of Lake Washington (July 16 to April 30). Operating within this time frame helps protect Chinook salmon, steelhead, bull trout and other salmonid fish species by doing work when juvenile fish are not expected to be present.

Best Management Practices: Applicable BMPs will be used, such as a floating boom around the in-water work area, to contain any floating debris that may escape during construction. The barge will have a perimeter containment sock to absorb oil and grease that might inadvertently wash from the barge during construction.

Hazardous material containment materials such as spill absorbent pads and trained personnel will be required onsite during any phase of construction where machinery is in operation near surface waters.

Conclusion

Juvenile Chinook salmon, and other salmonids, rear and migrate along the Lake Washington shoreline.

There will be temporary impacts from noise and disturbed sediments during construction. The project will restore 1.2 square feet of lakebed by removing pilings. The proposed repairs will remove 109 square feet of opaque decking from the dock configuration all within about 30 feet of the shoreline. The new additional finger piers and ell extension will add 226 square feet of overwater coverage. All new and existing decking will use grated ThruFlow decking and reduce the effective overwater coverage by 449 square feet at the site. The grating reduces the hard shadows favored by salmonid predators and increases productivity under the pier.

The new extension is in the deepest water possible to reduce the chances of sediment disturbance during docking and castoff, away from the nearshore.

A shoreline planting plan will be implemented and will add native trees and shrubs to the shoreline that will provide natural shading, allochthonous food sources and will eventually be a source of woody materials and will improve shoreline conditions at the site in the long-term to offset temporary construction impacts. The planting includes 2 native trees and 3 native shrubs.

The project will minimize construction effects on the environment by following the prescribed fish window and using applicable BMPs to prevent construction spills, turbidity, and floating

debris from escaping the area. The construction crew will retrieve all dropped items from the bottom and dispose of them properly.

This project has been designed to meet current residential dock standards and will use Best Management Practices to reduce project impacts. The conservation measures are designed to improve ecological functions or prevent further degradation of habitat. The project will improve shoreline conditions, reduce overwater coverage in the nearshore and reduce effective overwater coverage at the site. The proposed project has been designed to improve baseline ecological conditions at the site **and will result in No Net Loss of ecological functions**.

Document Preparers

Brad Thiele	Biologist	28 years of experience	Northwest Environmental Consulting, LLC (NWEC)

NWEC followed standard acceptable field methods and protocols at the time work was performed. These standards may include delineation of wetland and stream boundaries, characterization, rating, functional analyses, impact assessments and mitigation of impacts. The conclusions and findings in this report are based on field observations and measurements and represent our best professional judgment and to some extent rely on other professional service firms and available site information. Within the limitations of project scope, budget, and seasonal variations, we believe the information provided herein is accurate and true to the best of our knowledge. Northwest Environmental Consulting does not warrant any assumptions or conclusions not expressly made in this report or based on information or analyses other than what is included herein.

References

King County. 2021. King County iMap. Online database. Accessed April 2021 at https://gismaps.kingcounty.gov/iMap/

Washington Department of Fish and Wildlife (WDFW). 2021. Priority Habitats and Species. Online database. Accessed April 2021 at http://apps.wdfw.wa.gov/phsontheweb/

WDFW. 2021. SalmonScape. Online database. Accessed April 2021 at http://apps.wdfw.wa.gov/salmonscape/

Appendix A:
Project Drawings

SITE PLAN

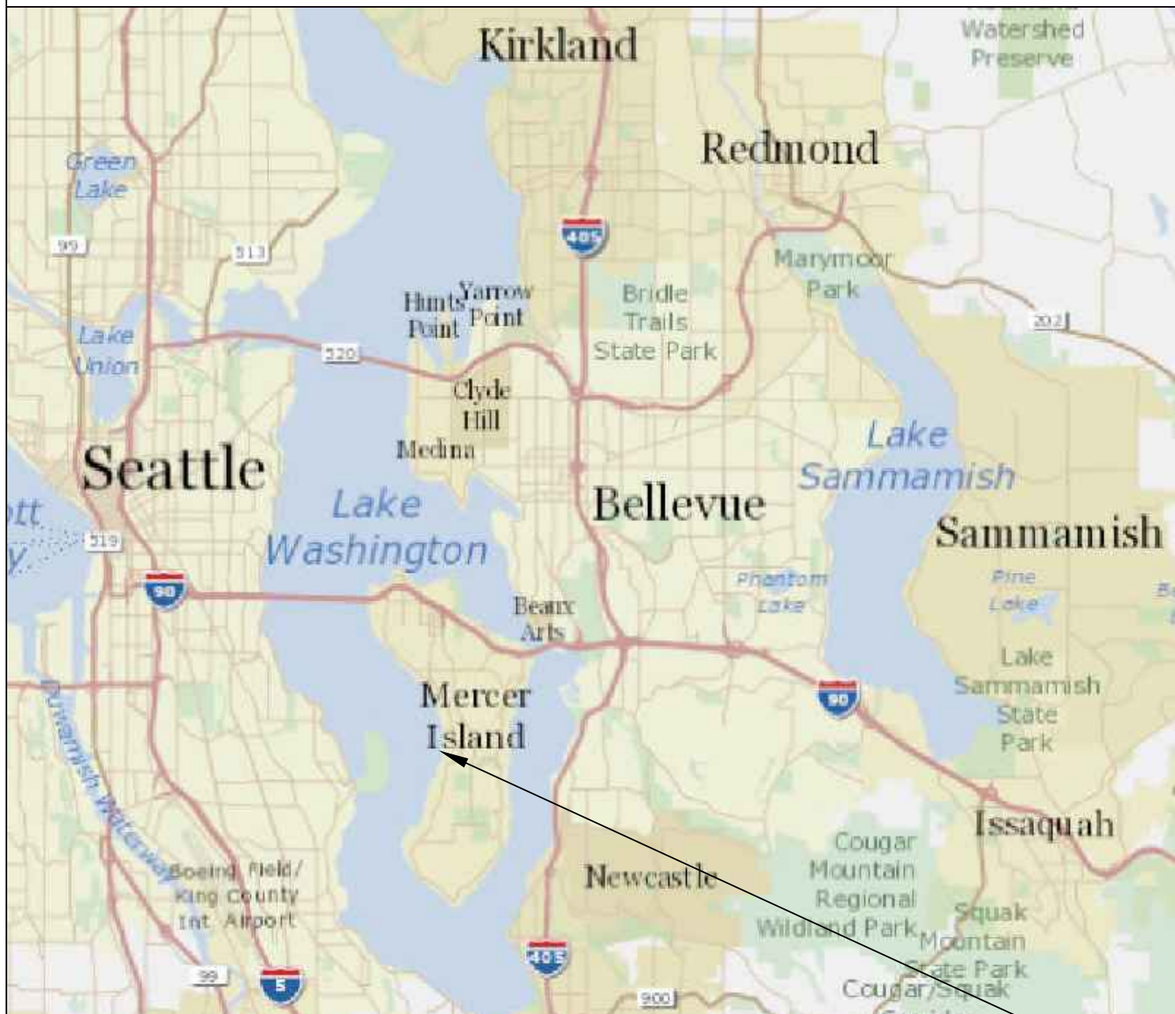

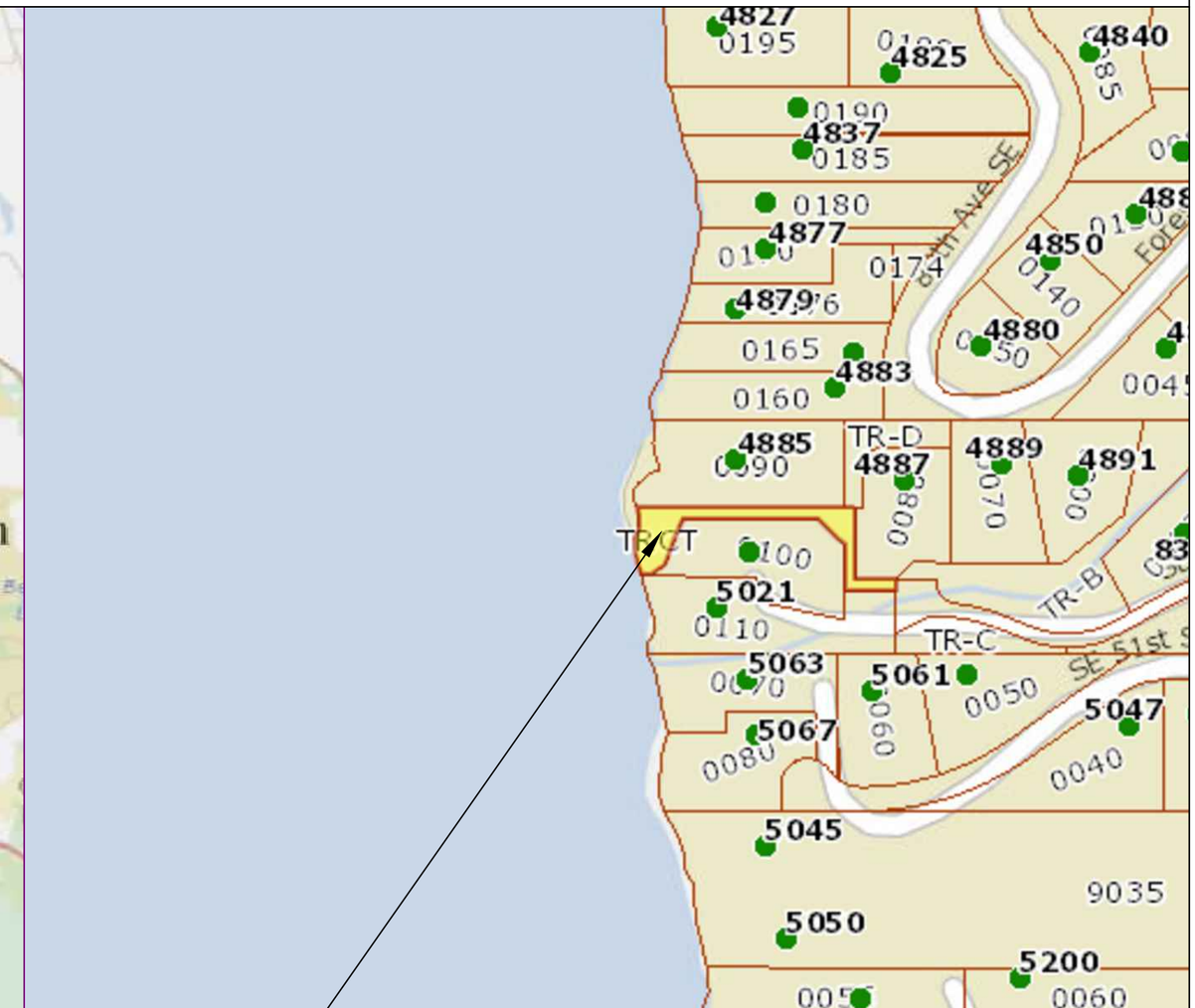

SUBJECT PROPERTY

Pin: 933270-0020

Legal Description: WEYBURN

Plat Block:
Plat Lot: 2

LAT: 47.55803 LONG: -122.22759

County: King County
Location: Lake Washington

Applicant: Weyburn HOA
8392 SE 50th Pl
Mercer Island, WA 98040

Created: 11/08/21

Last Updated: 12/23/2021 11:49 AM Dray

Datum: CORPS OF ENGINEERS 1919
NE Quarter Of Section 24, Township 24, Range 04

Adjacent Owners:
PAVLIN EDWARD G DR
5021 84TH AVE SE 98040
ERLITZ MARC D+MARLA J-TTEE
4885 FOREST AVE SE 98040

BUILT BY SEABORN · ESTD 1947 ·

Seaborn Pile Driving
1080 W Ewing St
Seattle, WA 98119

Office: 206-236-1700 ext. 3
www.seabornpiledriving.com

Scope of Work: We propose to remove (6) existing piles, remove (3) existing mooring piles, repair (28) existing piles, drive (11) piles, and repair the existing dock with grated decking material.

SHEET A1.0

NWS-2021-XXX
PAGE 1 OF 12

EXISTING CONDITIONS

****CLEAN UP LAKE AROUND PROJECT****

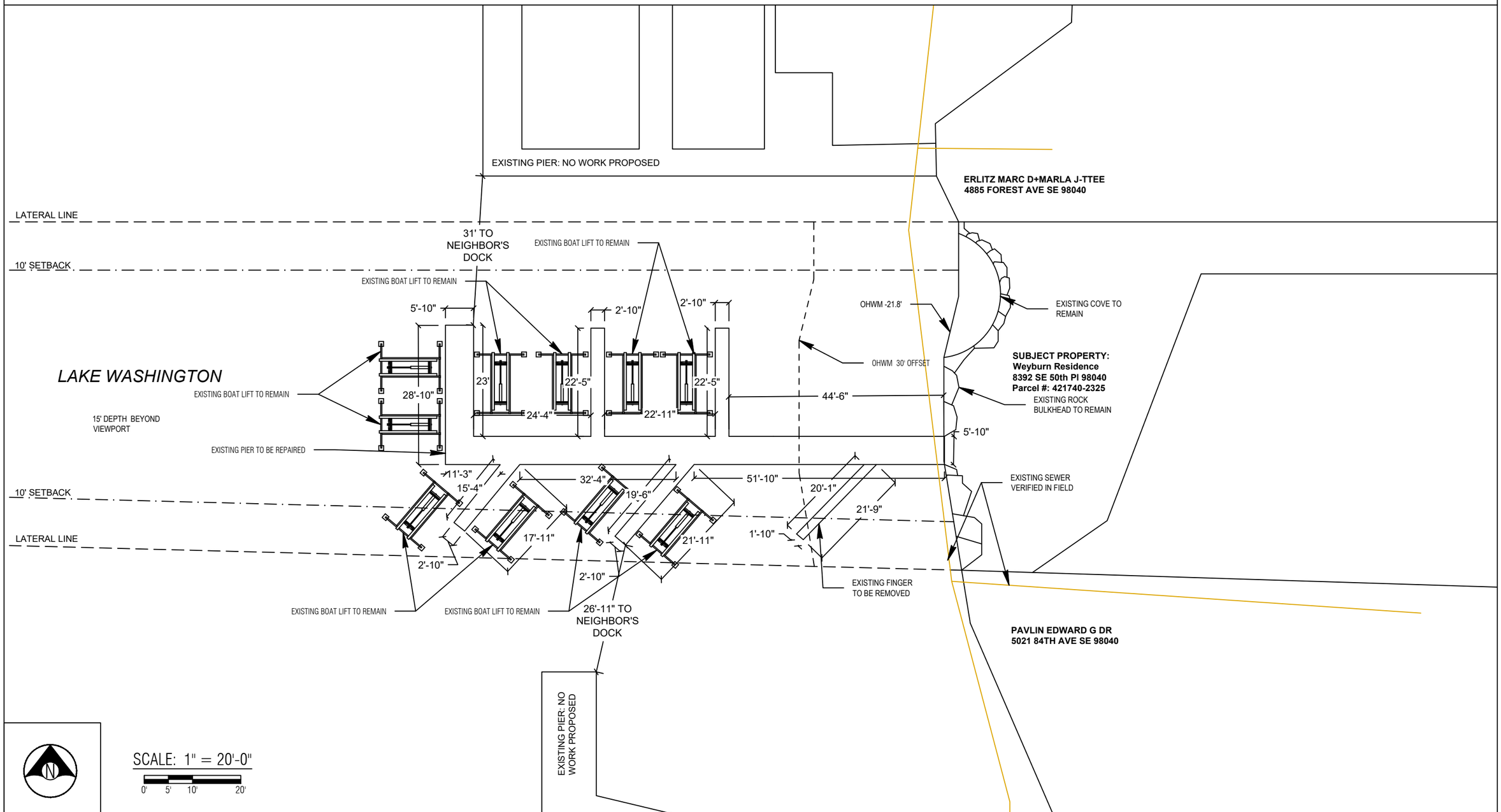

County: King County
Location: Lake Washington

Last Updated: 12/23/2021 11:49 AM Dray

Applicant: Weyburn HOA
8392 SE 50th Pl
Mercer Island, WA 98040

Created: 11/08/21

Datum: CORPS OF ENGINEERS 1919
NE Quarter Of Section 24, Township 24, Range 04

Adjacent Owners:
PAVLIN EDWARD G DR
5021 84TH AVE SE 98040
ERLITZ MARC D+MARLA J-TTEE
4885 FOREST AVE SE 98040

BUILT BY SEABORN · ESTD 1947 ·

Seaborn Pile Driving
1080 W Ewing St
Seattle, WA 98119

Office: 206-236-1700 ext. 3
www.seabornpiledriving.com

Scope of Work: We propose to remove (6) existing piles, remove (3) existing mooring piles, repair (28) existing piles, drive (11) piles, and repair the existing dock with grated decking material.

SHEET A2.0

PROPOSED CONDITIONS

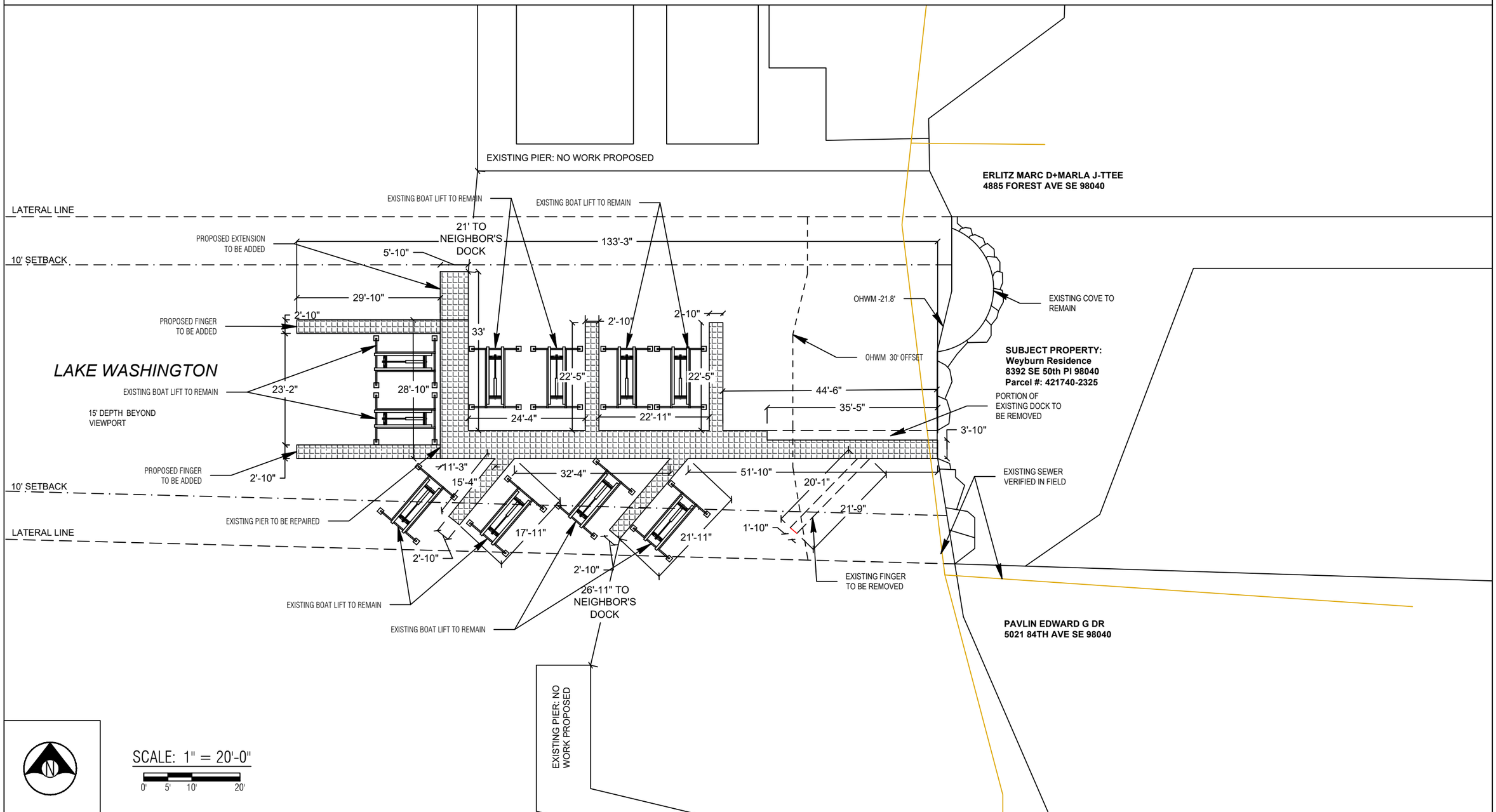

County: King County
Location: Lake Washington

Last Updated: 12/23/2021 11:49 AM Dray

Applicant: Weyburn HOA
8392 SE 50th Pl
Mercer Island, WA 98040

Created: 11/08/21

Datum: CORPS OF ENGINEERS 1919
NE Quarter Of Section 24, Township 24, Range 04

Adjacent Owners:
PAVLIN EDWARD G DR
5021 84TH AVE SE 98040
ERLITZ MARC D+MARLA J-TTEE
4885 FOREST AVE SE 98040

BUILT BY SEABORN · ESTD 1947 ·

Seaborn Pile Driving
1080 W Ewing St
Seattle, WA 98119

Office: 206-236-1700 ext. 3
www.seabornpiledriving.com

Scope of Work: We propose to remove (6) existing piles, remove (3) existing mooring piles, repair (28) existing piles, drive (11) piles, and repair the existing dock with grated decking material.

SHEET A3.0

PIER DETAILS - EXISTING/PROPOSED

LEGEND

○ (28) EXISTING PILES - TO BE REPAIRED

● (11) PROPOSED STEEL PILES - TO BE ADDED

⊗ (6) EXISTING PILES - TO BE REMOVED

○ (3) EXISTING MOORING PILES - TO BE REMOVED

Area: 928 sqft (original dock total)

Area: 109 sqft (total area to be removed)

Area: 226 sqft (total area to be added)

Area: 1045 sqft (new grated decking)

**Grated decking material is 43% light permeable

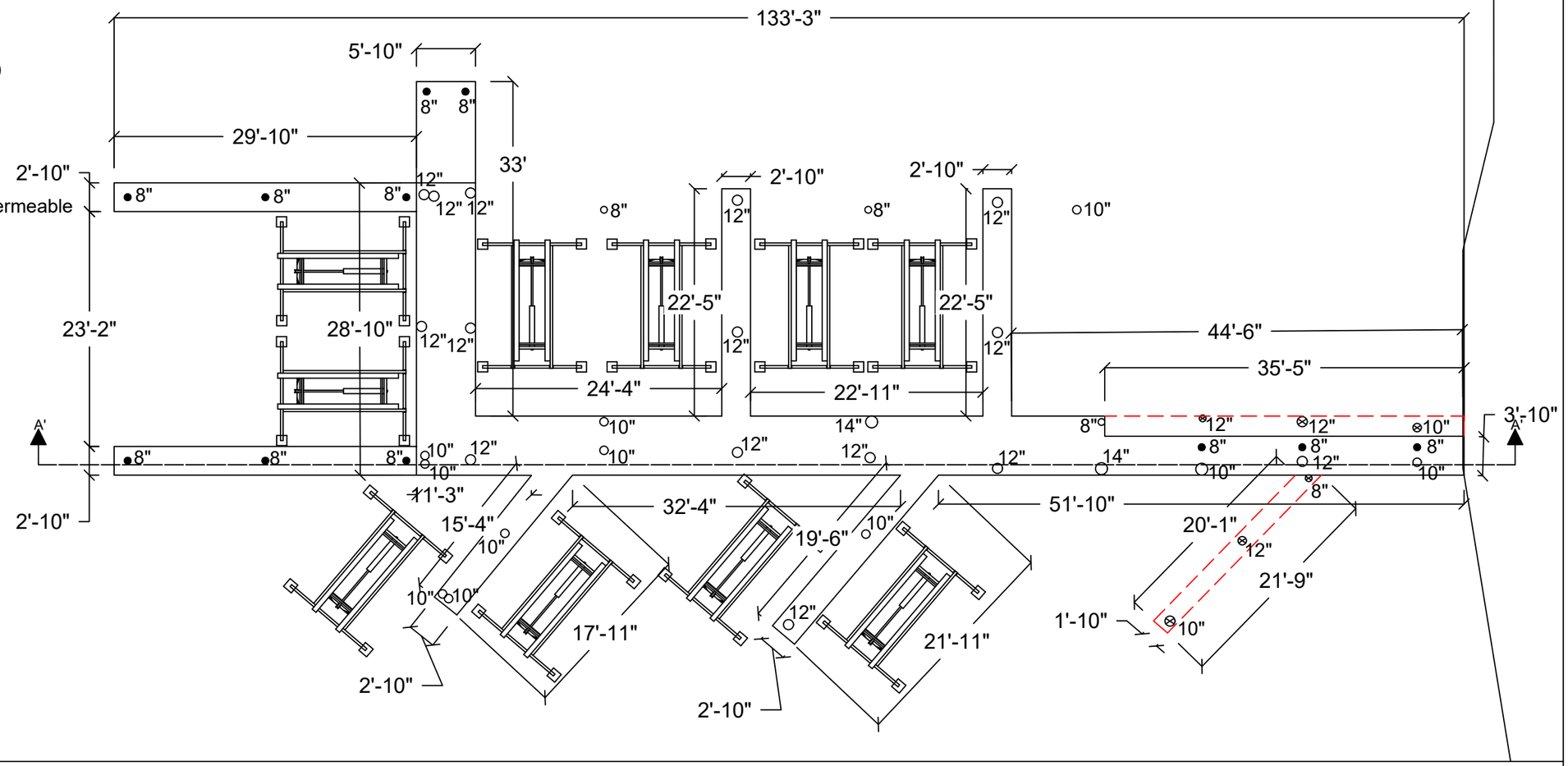

PLAN VIEW

County: King County
Location: Lake Washington

Applicant: Weyburn HOA
8392 SE 50th Pl
Mercer Island, WA 98040

Created: 11/08/21

Last Updated: 12/23/2021 11:49 AM Dray

Datum: CORPS OF ENGINEERS 1919
NE Quarter Of Section 24, Township 24, Range 04

Adjacent Owners:
PAVLIN EDWARD G DR
5021 84TH AVE SE 98040
ERLITZ MARC D+MARLA J-TTEE
4885 FOREST AVE SE 98040

BUILT BY SEABORN · ESTD 1947 ·

Seaborn Pile Driving
1080 W Ewing St
Seattle, WA 98119

Office: 206-236-1700 ext. 3
www.seabornpiledriving.com

Scope of Work: We propose to remove (6) existing piles, remove (3) existing mooring piles, repair (28) existing piles, drive (11) piles, and repair the existing dock with grated decking material.

SHEET A4.0

PIER DETAILS EXISTING/PROPOSED

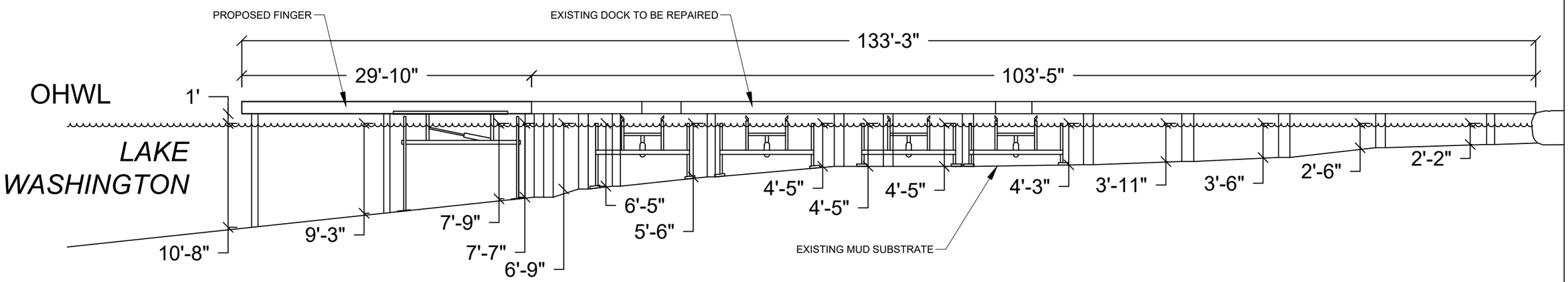

SECTION VIEW: A'-A'

Seaborn Pile Driving
1080 W Ewing St
Seattle, WA 98119

Office: 206-236-1700 ext. 3
www.seabornpiledriving.com

Scope of Work: We propose to remove (6) existing piles, remove (3) existing mooring piles, repair (28) existing piles, drive (11) piles, and repair the existing dock with grated decking material.

County: King County
Location: Lake Washington

Last Updated: 12/23/2021 11:49 AM Dray

Applicant: Weyburn HOA
8392 SE 50th Pl
Mercer Island, WA 98040

Created: 11/08/21

Datum: CORPS OF ENGINEERS 1919
NE Quarter Of Section 24, Township 24, Range 04

Adjacent Owners:
PAVLIN EDWARD G DR
5021 84TH AVE SE 98040
ERLITZ MARC D+MARLA J-TTEE
4885 FOREST AVE SE 98040

SHEET
A5.0

BMP INFORMATION

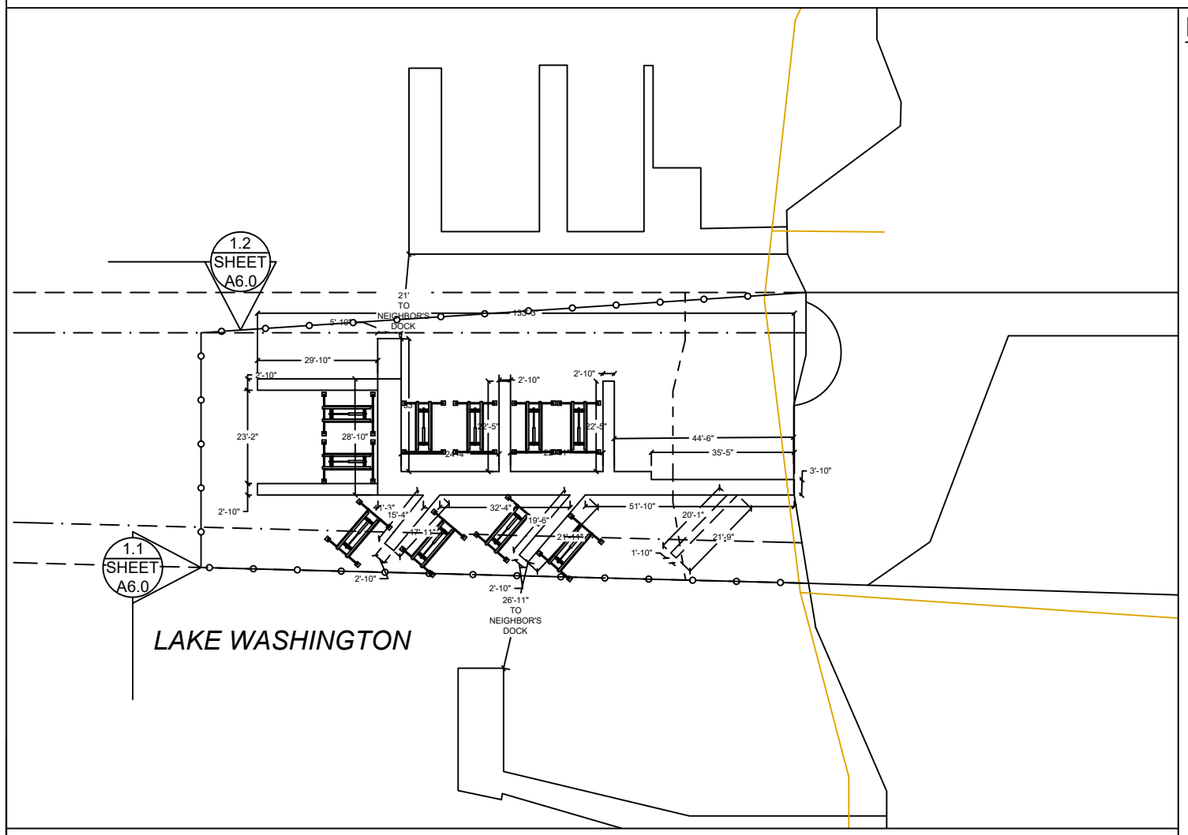

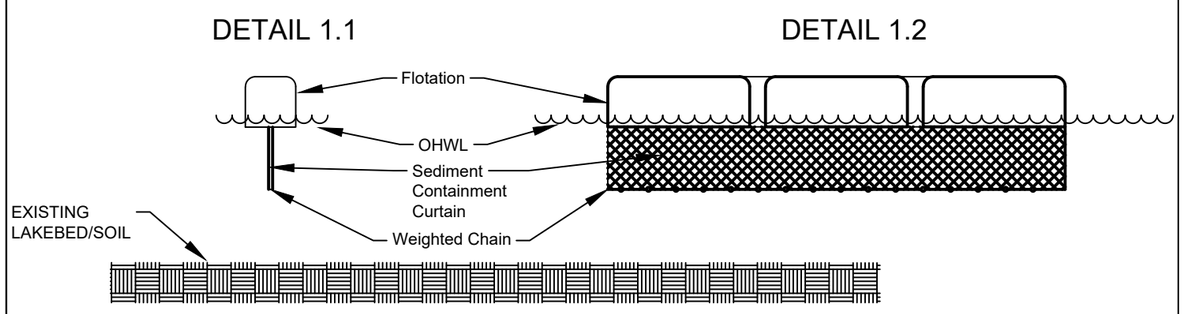

DETAIL 1.1 & 1.2

BMP NOTES:

A. Constant vigilance shall be kept for the presence of protected fish species during all aspects of the proposed action, particularly during in-water activities such as vessel movement, deployment of anchors & spuds, pile driving, dredging, and placement of gravels and other fill.

1. The project manager shall designate an appropriate number of competent observers to survey the project site and adjacent areas for protected species, including the presence of fish as conditions allow.
2. Visual surveys shall be made prior to the start of work each day, and prior to resumption of work following any break of more than an hour. Periodic additional visual surveys throughout the work day are strongly recommended.
3. All in-water work shall be done during the in-water work window for the waterbody. Where there is a difference between the USCOE and WDFW work windows, the overlap of the two shall apply.
4. All pile driving and extraction shall be postponed or halted when obvious aggregations or schooling of fish are observed within 50 yards of that work, and shall only begin/resume after the animals have voluntarily departed the area.
5. When piloting vessels, vessel operators shall operate at speeds and power settings to avoid grounding vessels, and minimize substrate scour and mobilization of bottom sediments.

B. No contamination of the marine environment shall result from project-related activities.

1. Appropriate materials to contain and clean potential spills shall be stored and readily available at the work site and/or aboard project-related vessels.
2. The project manager and heavy equipment operators shall perform daily pre-work equipment inspections for cleanliness and leaks. All heavy equipment operations shall be postponed or halted should a leak be detected, and shall not proceed until the leak is repaired and the equipment is cleaned.
3. To the greatest extent practicable, utilize biodegradable oils for equipment that would be operated in or near water.
4. Fueling of land-based vehicles and equipment shall take place at least 50 feet away from the water, preferably over an impervious surface. Fueling of vessels shall be done at approved fueling facilities.
5. Turbidity and siltation from project-related work shall be minimized and contained through the appropriate use of erosion control practices, effective silt containment devices, and the curtailment of work during adverse weather and tidal/flow conditions.
6. All wastes shall be collected and contained for proper disposal at approved upland disposal sites appropriate for the material(s).
7. When removing piles and other similarly treated wood, containment booms must fully enclose the work area. Wood debris, oils, and any other materials released into lake waters must be collected, removed, and properly disposed of at approved disposal sites.
8. All in- and over-water wood cutting would be limited to the minimum required to remove the subject wood component, and all cutting work should be enclosed within floating containment booms.
9. When removing piles, no actions shall be taken that would cause adhering sediments to return to lake waters.
10. Above-water containment shall be installed around removed piles to prevent sediment laden waters from returning to lake waters.
11. Construction staging (including stocking of materials, etc.) will occur on the supply barge.
12. All Exposed wood to be used on the project will be treated with a cheminite treatment.

BUILT BY SEABORN · ESTD 1947 ·

Seaborn Pile Driving
1080 W Ewing St
Seattle, WA 98119

Office: 206-236-1700 ext. 3
www.seabornpiledriving.com

Scope of Work: We propose to remove (6) existing piles, remove (3) existing mooring piles, repair (28) existing piles, drive (11) piles, and repair the existing dock with grated decking material.

County: King County
Location: Lake Washington

Applicant: Weyburn HOA
8392 SE 50th Pl
Mercer Island, WA 98040

Created: 11/08/21
Last Updated: 12/23/2021 11:49 AM Dray

Datum: CORPS OF ENGINEERS 1919
NE Quarter Of Section 24, Township 24, Range 04

Adjacent Owners:
PAVLIN EDWARD G DR
5021 84TH AVE SE 98040
ERLITZ MARC D+MARLA J-TTEE
4885 FOREST AVE SE 98040

SHEET A6.0

MITIGATION PLAN

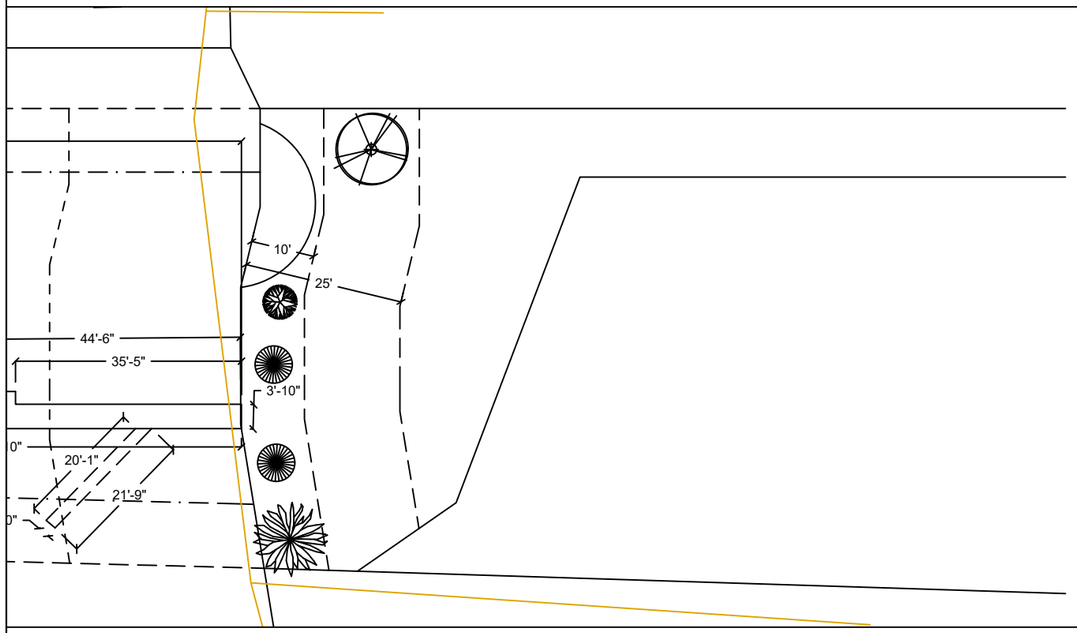

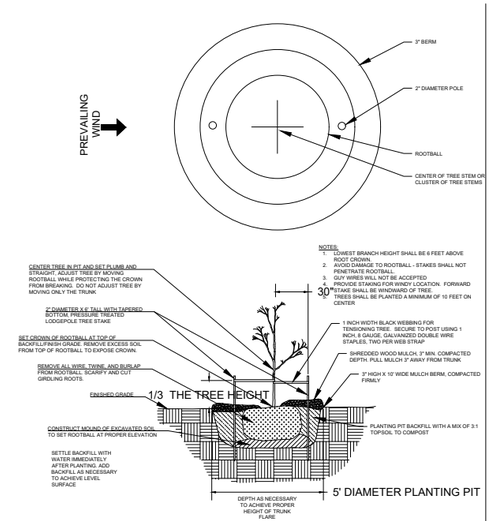

TREE PLANTING DETAILS (NTS)

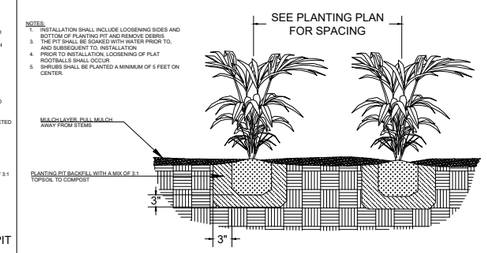

SHRUB AND GROUNDCOVER PLANTING DETAILS (NTS)

Notes:

1. Shrubs are show, and shall be planted, at least five feet on center. Trees are show, and shall be planted, at least ten feet to center.
2. The property owner will implement and abide by the shoreline planting plan. The plants shall be installed before or concurrent with the work authorized by this permit. A report, as-built drawing and photographs demonstrating the plants have been installed or a report on the status of project construction will be submitted to the U.S. Army Corps of Engineers, Seattle District, Regulatory Branch, within 12 months from the date of permit issuance. This reporting requirement may be met by completing and submitting a U.S. Army Corps of Engineers approved Report for Mitigation Work Completion form.
3. The property owner will maintain and monitor the survival of installed shoreline plantings for five years after the U.S. Army Corps of Engineers accepts the as-built report. Installed plants shall achieve 100% survival during monitoring Years 1 and 2. Installed plants shall achieve at least 80% survival during monitoring Years 3, 4 and 5. Percent survival is based on the total number of plants installed in accordance with the approved riparian planting plan. Individual plants that die will be replaced with native riparian species in order to meet the survival performance standards.
4. The property owner will provide annual monitoring reports for five years (Monitoring Years 1-5). Each annual monitoring report will include written and photographic documentation on plant mortality and replanting efforts and will document whether the performance standards are being met. Photos will be taken from established points and used repeatedly for each monitoring year. In addition to photos at designated points, photo documentation will include a panoramic view of the entire planting area. Submitted photos will be formatted on standard 8 1/2 x 11" paper, dated with the date the photo was taken, and clearly labeled with the direction from which the photo was taken. The photo location points will be identified on an appropriate drawing. Annual shoreline planting monitoring reports will be submitted to the U.S. Army Corps of Engineers, Seattle District, Regulatory Branch, by November 31 of each monitoring year. This reporting requirement may be met by completing and submitting a U.S. Army Corps of Engineers approved Mitigation Planting Monitoring Report form.

PROPOSED PLANTING SPECIES/QUANTITIES

SYMBOL	LATIN NAME	COMMON NAME	QTY	SIZE
	Thuja picatta	Western Redcedar	1	3 ft
	Pinus contorta v contorta	Shore pine	1	3 ft
	Rosa nutkana	Nootka Rose	1	1 Gallon
	Philadelphus lewisii	Mock Orange	2	1 Gallon

PLANTS: Shrubs to be installed 5ft on center and trees to be installed 10ft on center.

County: King County
Location: Lake Washington

Applicant: Weyburn HOA
8392 SE 50th Pl
Mercer Island, WA 98040

Created: 11/08/21

Last Updated: 12/23/2021 11:49 AM Dray

Datum: CORPS OF ENGINEERS 1919
NE Quarter Of Section 24, Township 24, Range 04

Adjacent Owners:
PAVLIN EDWARD G DR
5021 84TH AVE SE 98040
ERLITZ MARC D+MARLA J-TTEE
4885 FOREST AVE SE 98040

BUILT BY SEABORN · ESTD 1947 ·

Seaborn Pile Driving
1080 W Ewing St
Seattle, WA 98119

Office: 206-236-1700 ext. 3
www.seabornpiledriving.com

Scope of Work: We propose to remove (6) existing piles, remove (3) existing mooring piles, repair (28) existing piles, drive (11) piles, and repair the existing dock with grated decking material.

SHEET A7.0

EXISTING PLANT PLAN

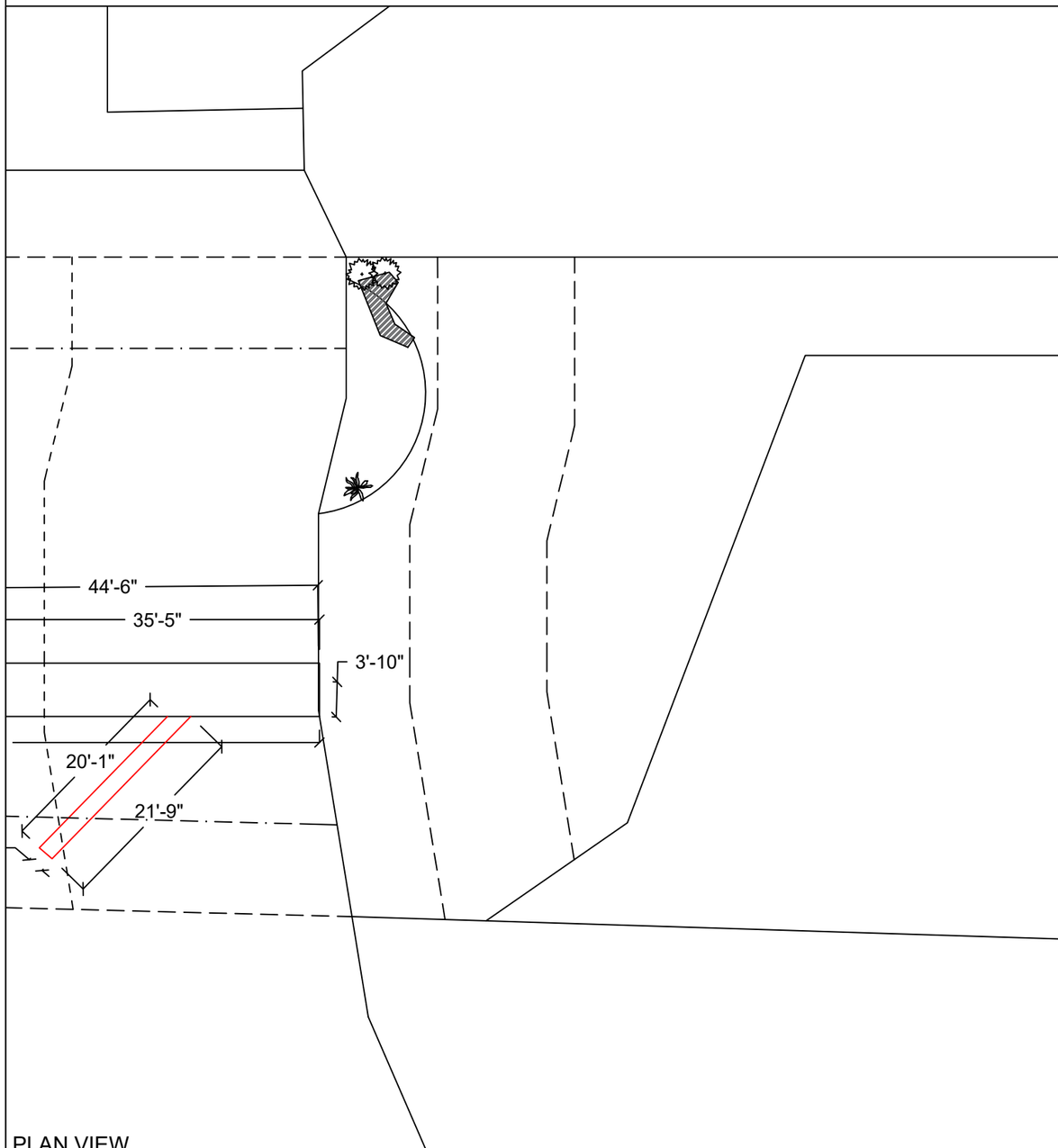

PLAN VIEW

EXISTING PLANTING SPECIES/QUANTITIES

SYMBOL	SCIENTIFIC NAME	COMMON NAME	QTY	SIZE
	Photinia serratifolia	Chinese photinia	1	~4'x5'
	Cortaderia selloana	Pampas grass	2	~5ft
	Hedera helix	English ivy	N/A	small

EXISTING PLANTS TABLE

County: King County
Location: Lake Washington

Applicant: Weyburn HOA
8392 SE 50th Pl
Mercer Island, WA 98040

Created: 11/08/21

Last Updated: 12/23/2021 11:49 AM Dray

Datum: CORPS OF ENGINEERS 1919
NE Quarter Of Section 24, Township 24, Range 04

Adjacent Owners:
PAVLIN EDWARD G DR
5021 84TH AVE SE 98040

ERLITZ MARC D+MARLA J-TTEE
4885 FOREST AVE SE 98040

BUILT BY SEABORN · ESTD 1947 ·

Seaborn Pile Driving
1080 W Ewing St
Seattle, WA 98119

Office: 206-236-1700 ext. 3
www.seabornpiledriving.com

Scope of Work: We propose to remove (6) existing piles, remove (3) existing mooring piles, repair (28) existing piles, drive (11) piles, and repair the existing dock with grated decking material.

SHEET A8.0

GENERAL NOTES:

MATERIALS SPEC LIST:

Boat Lifts:
* SL10014ARW - 146" x 191"

Decking Material: FRPP - Fiberglass reinforced polypropylene
Light permeable percentage:
* Surface - 43%
* 18" Dock Height - 61%

SEWER:
* All sewer is field verified by probing the lake bed manually during the allowed work windows for the area.

PILES:
* All new piles are epoxy coated steel piles *size varies, see plan set
* Repair piles are done as a sleeve/strap method
* Piles are driven using the vibro method

DOCK: being repaired/replaced
* _100_ % of Decking
* _100_ % of stringers
* _100_ % of caps

MITIGATION:
* Originally submitted mitigation will change following CORPS submittal. We will update the plan set to reflect all changes before submitting for an amendment

CODE REFERENCES: MERCER ISLAND

We are applying for the permit to be reviewed under the:

"Alternative Development Standards" per MIMC 19.13050(F)(3).

The code official shall approve moorage facilities not in compliance with the development standards in subsection (F)(1) or (F)(2) of this section subject to both U.S. Army Corps of Engineers and Washington Department of Fish and Wildlife approval to an alternate project design. The following requirements and all other applicable provisions in this chapter shall be met:

i. The dock must be no larger than authorized through state and federal approval; Ch. 19.13 Shoreline Master Program | Mercer Island City Code Page 30 of 34 The Mercer Island City Code is current through Ordinance 20C-13, passed June 16, 2020.

Currently in review.

ii. The maximum width must comply with the width of moorage facilities standards specified in standards specified in subsection D of this section (Table D);

The maximum width is compliant.

iii. The minimum water depth must be no shallower than authorized through state and federal approval;

The minimum water depth is compliant.

iv. The applicant must demonstrate to the code official's satisfaction that the proposed project will not create a net loss in ecological function of the shorelands; and

No Net Loss report is attached.

v. The applicant must provide the city with documentation of approval of the moorage facilities by both the U.S. Army Corps of Engineers and the Washington Department of Fish and Wildlife.

Appropriate documentation is attached.

Last permit issued for property: SHL9010-001 3/26/1991

Dock established/constructed: 10/30/1990

BUILT BY SEABORN · ESTD 1947 ·

Seaborn Pile Driving
1080 W Ewing St
Seattle, WA 98119

Office: 206-236-1700 ext. 3
www.seabornpiledriving.com

Scope of Work: We propose to remove (6) existing piles, remove (3) existing mooring piles, repair (28) existing piles, drive (11) piles, and repair the existing dock with grated decking material.

County: King County
Location: Lake Washington

Applicant: Weyburn HOA
8392 SE 50th Pl
Mercer Island, WA 98040

Created: 11/08/21

Last Updated: 12/23/2021 11:49 AM Dray

Datum: CORPS OF ENGINEERS 1919
NE Quarter Of Section 24, Township 24, Range 04

Adjacent Owners:
PAVLIN EDWARD G DR
5021 84TH AVE SE 98040

ERLITZ MARC D+MARLA J-TTEE
4885 FOREST AVE SE 98040

SHEET A9.0

DETAILS - REPAIR

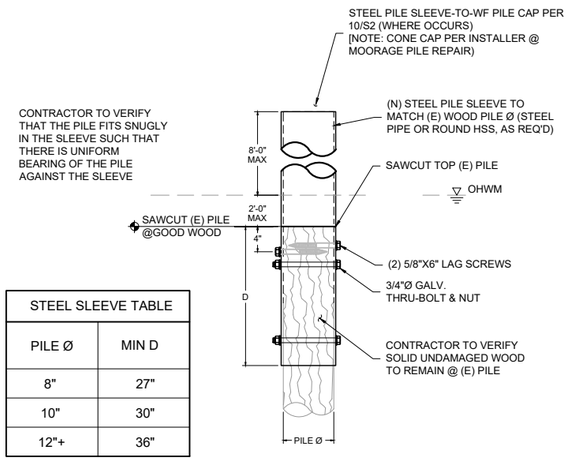

STEEL SLEEVE TABLE	
PILE Ø	MIN D
8"	27"
10"	30"
12"+	36"

S1 SLEEVE PILE REPAIR - TYP
SCALE: 1/2" - 1'

S2 DO NOT USE DETAIL

S3 DO NOT USE DETAIL

S4 DO NOT USE DETAIL

STEEL SLEEVE TABLE				
PILE Ø	MAX SPLICE HEIGHT	S1	S2	S3
9"	15"	6"	12"	3"
12"+	28"	6"	12"	3"

NOTES:
1) MAX PILE LOAD = 1,200 # / PILE (BOAT LOAD PARALLEL TO DOCK).
CONTACT ENGINEERING IF BOAT SIZE EXCEEDS GENERAL NOTES MAXIMUM ALLOWABLE.
2) MINIMUM BOLT SPACING = 3"
3) STRAP AXIS SHALL BE ORIENTED PERPENDICULAR TO LONGITUDINAL AXIS OF DOCK.

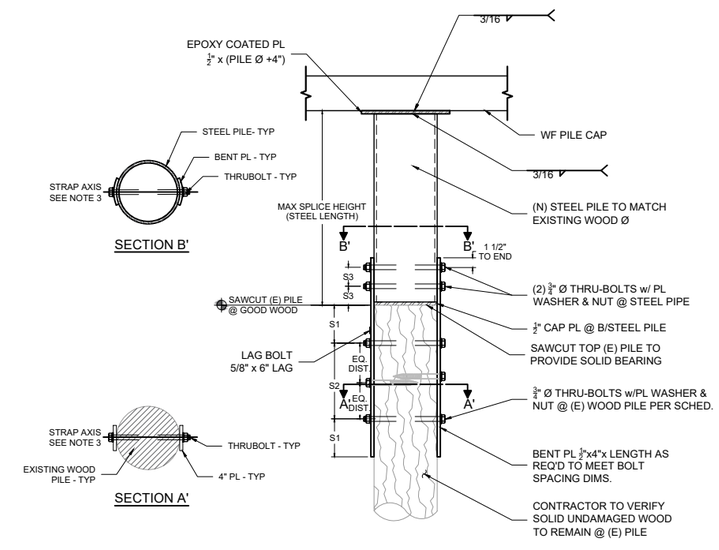

S5 SPLICE PILE REPAIR - TYP
SCALE: 1/2" - 1'

BUILT BY SEABORN · ESTD 1947 ·

Seaborn Pile Driving
1080 W Ewing St
Seattle, WA 98119

Office: 206-236-1700 ext. 3
www.seabornpiledriving.com

Scope of Work: We propose to remove (6) existing piles, remove (3) existing mooring piles, repair (28) existing piles, drive (11) piles, and repair the existing dock with grated decking material.

County: King County
Location: Lake Washington

Applicant: Weyburn HOA
8392 SE 50th Pl
Mercer Island, WA 98040

Created: 11/08/21
Last Updated: 12/23/2021 11:49 AM Dray

Datum: CORPS OF ENGINEERS 1919
NE Quarter Of Section 24, Township 24, Range 04

Adjacent Owners:
PAVLIN EDWARD G DR
5021 84TH AVE SE 98040
ERLITZ MARC D+MARLA J-TTEE
4885 FOREST AVE SE 98040

SHEET A10.0

NWS-2021-XXX
PAGE 10 OF 12

DETAILS - TRACK

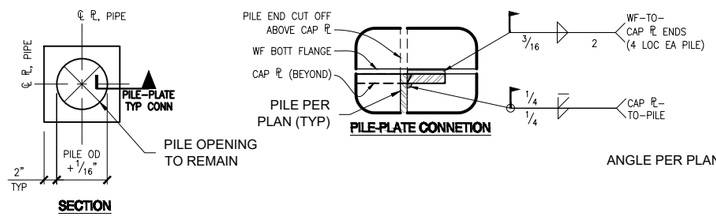

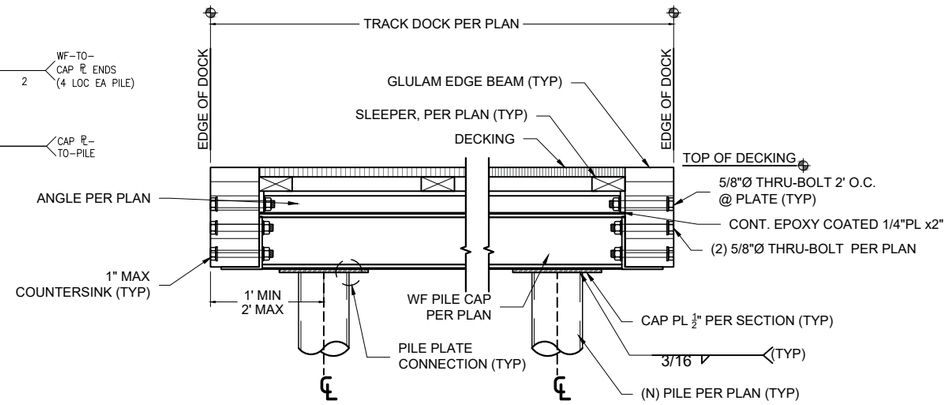

S1 DOCK SECTION w/PILES - TYP
SCALE: 1" - 1'

S3 DO NOT USE DETAIL

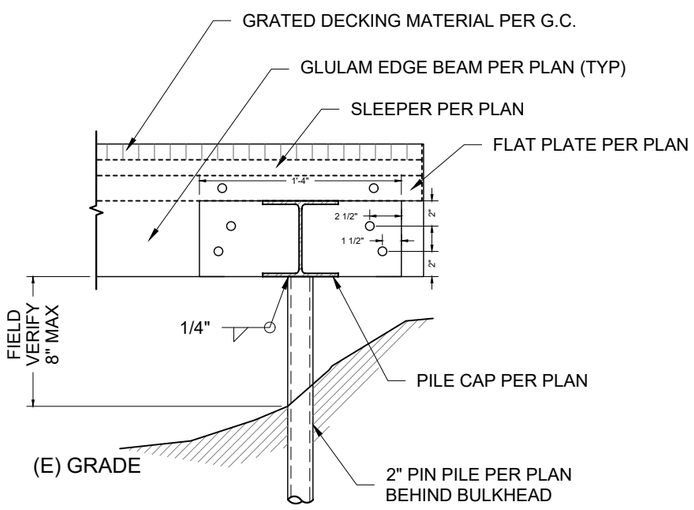

S4 PIN PILE @SHORE MOUNT - TYP
SCALE: 1" - 1'

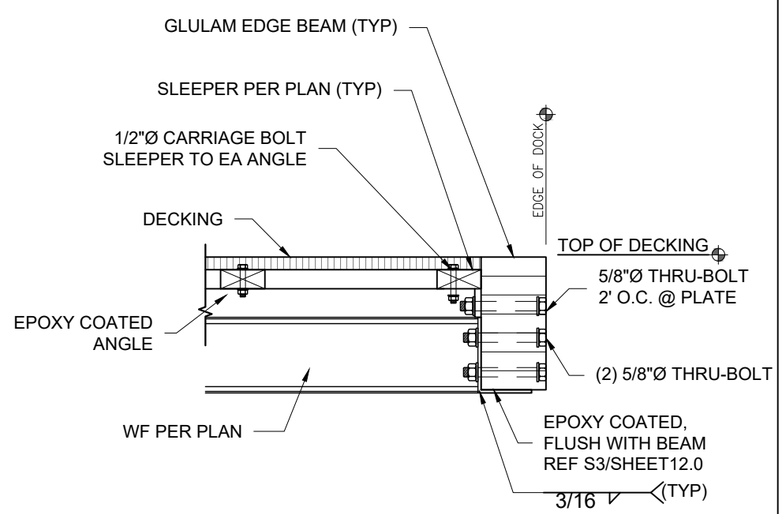

S5 EDGE SECTION (STEEL TRACK) - TYP
SCALE: 1" - 1'

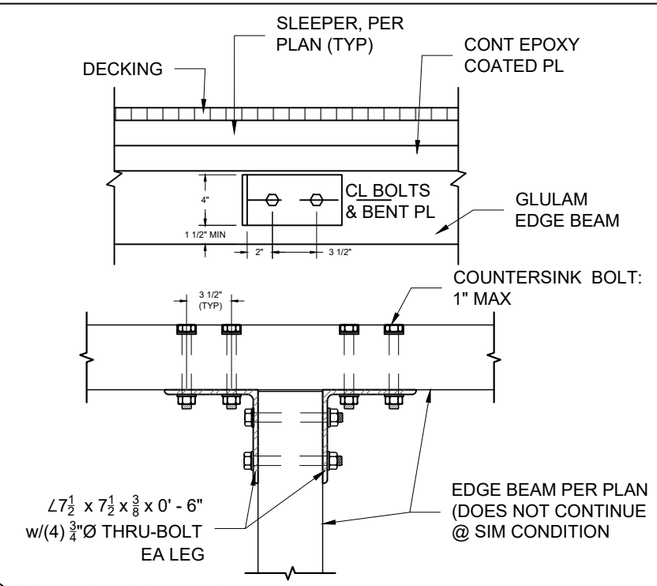

S6 BEAM TO BEAM - TYP
SCALE: 1" - 1'

County: King County
Location: Lake Washington

Last Updated: 12/23/2021 11:49 AM Dray

Applicant: Weyburn HOA
8392 SE 50th Pl
Mercer Island, WA 98040

Created: 11/08/21

Datum: CORPS OF ENGINEERS 1919
NE Quarter Of Section 24, Township 24, Range 04

Adjacent Owners:
PAVLIN EDWARD G DR
5021 84TH AVE SE 98040
ERLITZ MARC D+MARLA J-TTEE
4885 FOREST AVE SE 98040

BUILT BY SEABORN · ESTD 1947 ·

Seaborn Pile Driving
1080 W Ewing St
Seattle, WA 98119

Office: 206-236-1700 ext. 3
www.seabornpiledriving.com

Scope of Work: We propose to remove (6) existing piles, remove (3) existing mooring piles, repair (28) existing piles, drive (11) piles, and repair the existing dock with grated decking material.

SHEET 11.0

DETAILS - TRACK

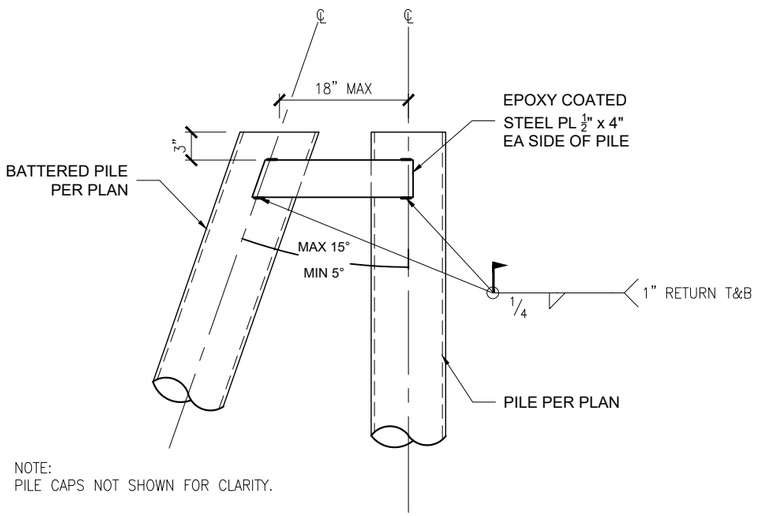

NOTE:
PILE CAPS NOT SHOWN FOR CLARITY.

S1 BRACE PILES - TYP
SCALE: 3/4" - 1'

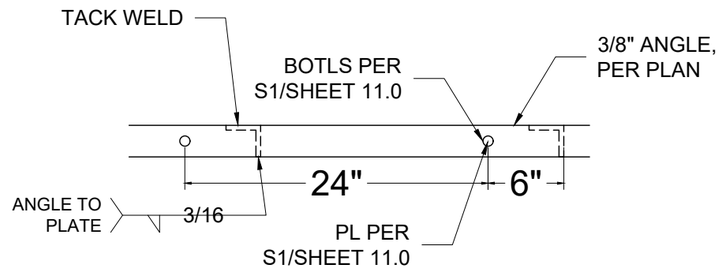

S2 ANGLE TO PLATE - TYP
SCALE: 1" - 1'

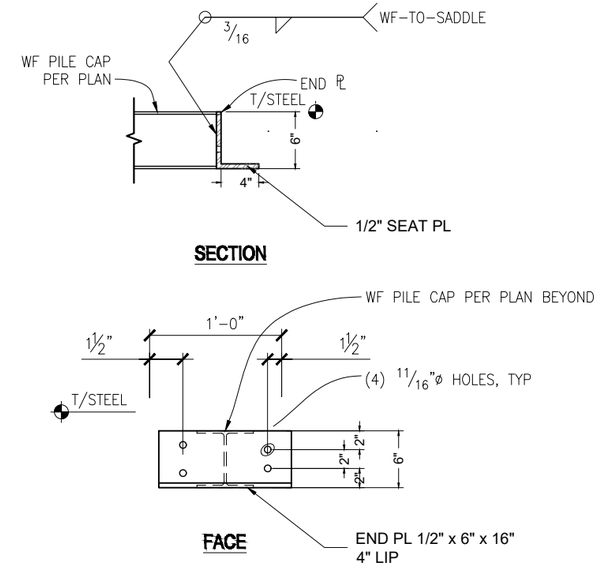

S3 BEAM SADDLE BRACKET
SCALE: 3/4" - 1'

S4 DO NOT USE DETAIL

S5 DO NOT USE DETAIL
SCALE: 1" - 1'

S6 DO NOT USE DETAIL
SCALE: 1" - 1'

County: King County
Location: Lake Washington

Applicant: Weyburn HOA
8392 SE 50th Pl
Mercer Island, WA 98040

Created: 11/08/21

Last Updated: 12/23/2021 11:49 AM Dray

Datum: CORPS OF ENGINEERS 1919
NE Quarter Of Section 24, Township 24, Range 04

Adjacent Owners:
PAVLIN EDWARD G DR
5021 84TH AVE SE 98040

ERLITZ MARC D+MARLA J-TTEE
4885 FOREST AVE SE 98040

BUILT BY SEABORN · ESTD 1947 ·

Seaborn Pile Driving
1080 W Ewing St
Seattle, WA 98119

Office: 206-236-1700 ext. 3
www.seabornpiledriving.com

Scope of Work: We propose to remove (6) existing piles, remove (3) existing mooring piles, repair (28) existing piles, drive (11) piles, and repair the existing dock with grated decking material.

SHEET
12.0

Appendix B:
Site Photographs

Photo 1 - Existing dock looking waterward.

Photo 2 - Existing dock looking landward.

Photo 3 - Shoreline conditions to the north of the dock.

Photo 4 - Shoreline conditions south of the dock.

Photo 5 - Conditions along the shoreline north of the site.

Photo 6 - Conditions along the shoreline south of the site.

Photo 7 - finger pier to be removed.