CITY OF MERCER ISLAND
DEVELOPMENT SERVICES GROUP

9611 SE 36TH STREET | MERCER ISLAND, WA 98040
PHONE: 206.275.7605 | www.mercergov.org

INSPECTION REQUESTS:
online: MyBuildingPermit.com
voicemail: (206) 275-7730

NOTE: ALL RECORDS AND DRAWINGS ARE SUBJECT TO PUBLIC DISCLOSURE AS REQUIRED BY RCW 42.56

TO BE COMPLETED BY APPLICANT

CONTACT INFORMATION:
Applicant is to complete the following information.

Applicant Contact information *prior* to permit issuance:
Name: Janet Buttenwieser and Matthew Wiley
Address: 6838 96th Ave SE, Mercer Island, WA 98040
Phone: (206) 388-8558
Email: matthew@wiley.net

Applicant Contact information *post* permit issuance:
Name: Janet Buttenwieser and Matthew Wiley
Address: 6838 96th Ave SE, Mercer Island, WA 98040
Phone: (206) 388-8558
Email: matthew@wiley.net

REQUIRED SPECIAL INSPECTIONS / STRUCTURAL OBSERVATIONS:
It is the Engineer of Record's responsibility to specify all required Special Inspections or Structural Observation (check items below). The owner is responsible for hiring an approved private Special Inspector for the checked inspections noted below. All Special Inspectors (except Geotechnical) must be WABO certified.
When Special Inspection or Structural Observation is required, the report shall be submitted to the City Building Inspector prior to the City Inspection. **Note: Inspection by the City Inspector is required in addition to the Special Inspection or Structural Observation indicated below. Do not cover or conceal any work prior to the City inspection.**

STRUCTURAL OBSERVATION BY ENGINEER OF RECORD (EOR):
Engineer of Record: Ted Ryan Company: PCS Structural Solutions Phone: (206) 292-5076
- [x] General Conformance to Construction Documents
- [x] Other: See structural observation letter for frequency

SOILS / GEOTECHNICAL:
Special Inspector: ____ Company: ____ Phone: ____
- [x] Erosion control measures
- [x] Shoring installation and monitoring
- [x] Observe and monitor excavation
- [x] Verification of soil bearing
- [ ] Other:
- [x] Subsurface drainage placement
- [x] Verify fill material and compaction
- [x] Rockery installation
- [x] Pile placement (auger cast/driven pile)
- [ ] Other:

REINFORCED CONCRETE:
Special Inspector: ____ Company: ____ Phone: ____
- [x] Concrete strength
- [x] Reinforcing steel and concrete placement
- [x] Shotcrete placement
- [ ] Other:
- [x] Retaining wall construction
- [ ] Prestressed / Precast construction
- [ ] Other:
- [ ] Other:

STRUCTURAL STEEL: *(AISC 360, Chapter N)*
Special Inspector: ____ Company: ____ Phone: ____
- [x] Fabrication and shop welds
- [x] Structural steel erection, field welds and bolting
- [ ] Other:
- [ ] Moment Frame construction
- [ ] Other:
- [ ] Other:

STRUCTURAL MASONRY:
Special Inspector: ____ Company: ____ Phone: ____
- [ ] Mortar strength
- [ ] Masonry unit strength
- [ ] Other:
- [ ] Other:
- [ ] Glass unit masonry installation
- [ ] Wall panel and veneer installation
- [ ] Other:
- [ ] Other:

WOOD:
Special Inspector / Engineer of Record: ____ Company: ____ Phone: ____
- [x] Lateral resisting system construction
- [ ] Other:
- [x] High strength diaphragm construction
- [ ] Other:

OTHER SPECIAL INSPECTIONS:
Special Inspector: ____ Company: ____ Phone: ____
- [x] Epoxy grout installations
- [x] Expansion anchor installations
- [ ] Other post installed anchors
- [ ] Alternative construction methods:
- [ ] Alternative construction materials:
- [ ] Stucco installation
- [ ] Infiltration System
- [ ] Exterior Insulation Finish System (EIFS) installation
- [ ] Other:
- [ ] Other:

DEFERRED SUBMITTALS:
The Applicant is required to select all deferred submittals / shop drawings for submittal to the City for review and approval prior to item fabrication / construction.
- [ ] Connector plate wood trusses
- [ ] Metal joist / metal trusses
- [ ] Premanufactured structures (stairs, etc.)
- [ ] Precast concrete elements
- [x] Other: Wood I-Joists
- [ ] Post tension layout
- [ ] Exterior cladding
- [x] Window wall / curtain wall construction
- [ ] Other:
- [ ] Other:

TO BE COMPLETED BY APPLICANT

ENERGY CODE COMPLIANCE INFORMATION:
Indicate where the following information is located in the drawing set. Alternatively, incorporate or include the Residential Energy Code Prescriptive Compliance (RECPC) Form into the drawing set.

	Sheet:
[x] Building envelope: *WSEC Table 402.1.1* (include U-factors, insulation and moisture control)	A010
[x] Whole house ventilation: *IRC Section M1507 WA Amended* (include ventilation option and duct sizing if applicable)	G100
[x] Energy Credit Information: *WSEC Table 406.2* (include specific, written requirements)	G100
[ ] RECPC Form Information: (if incorporated within drawing set) http://www.mercergov.org/files/2012ResidentialEnergyCalcForm.pdf	
[x] Air Leakage Testing. *IRC Section R402.4.1.2 WA Amendments* [x] Provide air leakage test report verifying air leakage rate does not to exceed 5 air changes per hour.	
[x] Duct Leakage Testing. *WSEC R403.2.2*	
[x] Postconstruction Test. *WSEC R403.2.2.1*	
[x] Rough-in Test. *WSEC R403.2.2.3*	

FILE NAME: *DSG CVR 2016 24x36.PDF*

TO BE COMPLETED BY DSG

PROJECT ALERTS:
Construction of the project shall be from ***approved plans only***. No deviation from the approved project plans is allowed without prior approval from the City of Mercer Island. Approved plans must be kept on site and maintained in good condition.

- [x] Refer to "Conditions of Permit Approval" provided at permit issuance for required construction rules and regulations, including:
  - Site Considerations
  - Hours of Work
  - Construction Vehicle Parking Restrictions
  - Acess Road Requirements
  - ROW restrictions
  - Drainage Requirements
  - Sewer Requirements
  - Water Service Requirements
  - Additional Fire Code Requirements
  - Planning Requirements
  - Noise Abatement Certification
  - Tree Requirements
- [ ] Refer to "Preconstruction Meeting Checklist" provided at the preconstruction meeting for development related requirements.
- [x] Temporary site address with minimum 6" high numbers visible from the street must be installed.
- [x] Erosion control measures must be as shown on approved project drawings. All erosion control is to be in place and inspected prior to the start of any site work.
- [x] A City of Mercer Island Business License is required for all subcontractors. Call (206) 275-7783 for more information.

TREE PROTECTION REQUIREMENTS:
- [x] Tree protection as shown on approved drawings shall be installed at tree dripline prior to start of any site work and must remain in place throughout the project.
- [x] No trees shall be cut without a City of Mercer Island tree permit.
- [x] Replacement trees must be a minimum of six feet tall at installation. They must be planted and approved prior to final inspection.
  - [x] For this project, 1 trees are authorized to be removed and replaced with 2 trees.
- [ ] This project appears to be within a protected eagle nest area. Contact Federal Fish and Wildlife at (360) 534-9304 or visit their website at http://www.fws.gov/pacific/eagle

FIRE PROTECTION REQUIREMENTS:
Separate Permits are required for ALL fire protection systems. For more information, see http://www.mercergov.org/Page.asp?NavID=2614

- [x] Fire Sprinkler SEPARATE PERMIT REQUIRED
  - [ ] NFPA 13D
    - [ ] Plus
  - [x] NFPA 13R Internal alarm must sound upon waterflow
  - [ ] NFPA 13
- [x] Approved Fire Code Alternatives:
  - [x] FCA1 Type X Throughout
  - [x] FCA2 Solid Core Doors
- [x] Monitored Household Fire Alarm per NFPA 72 SEPARATE PERMIT REQUIRED
- [x] Monitored Sprinkler Water Flow Alarm Per NFPA 13R
- [ ] Other:
  - [x] FCA3 NFPA 14 Standpipe System - SEPARATE PERMIT REQUIRED
  - [ ] FCA4

WATER SUPPLY REQUIREMENTS:
- [ ] Fire sprinkler design calculations must be provided prior to determining water supply system requirements.
- [x] Water Supply system upgrade required
  - [ ] City Installation.
  - [ ] Applicant Installation.
    Required Service Line Size: 2" (water main to meter) Required Supply Line Size: 2" (water main to house) Required Meter Size: 1-1/2"
- [x] Abandonment of existing service and meter required at main.
- [x] Pressure reducing valve required if pressure exceeds 80 psi.
- [x] Reduced pressure backflow assembly (RPBA) required for all lots with waterfront or non-city water supply (private wells or lake irrigation).
- [ ] Additional water supply requirements:

DRAINAGE REQUIREMENTS:
- [ ] On site detention system required.
- [ ] On site infiltration system required.
- [x] As-built Utility drawings required.
  - [x] Full Size drawings required.
- [x] Direct discharge into the lake.
- [ ] No Storm Water permit required.
- [ ] Connection to public storm drainage conveyance system req'd.
- [x] Other: Civil Engineer certification letter for Post construction Soil

SIDE SEWER REQUIREMENTS:
- [x] Side sewer requires a backflow preventer when connecting to the lake line or when the elevation of the lowest plumbing fixture is lower than the elevation of the upstream manhole rim or when side sewer is shared with one or more properties.
- [x] Video tape of existing sewer required (see standard details)
- [ ] New connection. [x] Connect to existing. ✔ Disconnect permit required. [x] Reconnect permit required.
- [ ] Other:

Note: When side sewer is to be connected to the lake line you will need to schedule three (3) days in advance with the City of Mercer Island Maintenance Department at (206) 275-7800.

APPROVED CODE ALTERNATIVES:
Code alternatives must be Inspected. Refer to the Inspection Checklist
- [ ] CA1:
- [ ] CA2:

SURVEY REQUIREMENTS (The following survey information must be submitted when checked):
Surveyor shall verify points chosen for height calculations and point verification shall be submitted at the time of City foundation Inspection. A property survey may be required to verify setbacks and in some cases buildings must be surveyed onto the lot. The City reserves the right to request an impervious area survey at any time prior to issuance of Certificate of Occupancy.

Surveyor: ____ Phone: ____
- [x] Building height survey
- [x] Building setback survey
- [ ] Impervious surface survey
- [ ] Other:
- [ ] **MAXIMUM 40 PERCENT ALTERATION INSPECTION:** *MCC 19.01.050(D)(1)(b)(i)*
  A Building Inspection prior to demolition is required for all legally nonconforming single family dwelling to ensure no more than 40 percent of the dwelling's exterior walls are structurally altered. Contact the Building Inspector at (206) 275-7730.
  - [ ] Civil / Drainage
  - [ ] LUP / Setback requirements

GEOTECHNICAL INFORMATION:
Land clearing, grading, filling and foundation work within geologic hazard areas is **NOT PERMITTED** between October 1 and April 1 without an approved Seasonal Development Limitation Waiver.

- [x] Geotechnical Report provided. All construction must comply with the recommendations of the Geotechnical Report. A copy of report and other geotechnical information must be kept on site at all times.
  ASPECT CONSULTING *Geotechnical Engineer* (206) 328-7443 *Phone*

SEASONAL DEVELOPMENT LIMITATION RESTRICTION:
- [x] Applies (Geologic Hazard area). Grading not permitted between October 1 through April 1.
- [ ] Waiver approved. Grading and excavation permitted subject to all conditions noted in Seasonal Development Limitation Waiver Permit.

Permit number *Approved by* *Date*

TO BE COMPLETED BY DSG

REQUIRED CONSTRUCTION INSPECTIONS:
It is the applicant's responsibility to contact DSG to schedule ALL inspections appropriate for the project. Request inspections online at www.MyBuildingPermit.com or by calling the Inspection Hotline at (206) 275-7730. Allow at least 24 hours (48 hours for Reinforcing steel) in advance of desired inspection. Be specific as to type of inspection.

Inspector shall initial and date appropriate inspection *only* if approved. Note: ***Items marked with an "•" require a separate permit.*** It is the applicants responsibility to apply for and obtain all City of Mercer Island permits.

INSPECTIONS: (Listed in order of typical sequencing)

Inspector	Date	Approved	
		[ ]	Pre-construction Meeting to Review Conditions of Permit Approval.
		•[ ]	Tree protection
		[ ]	Erosion control
		•[ ]	Sewer disconnect and cap. If applicable, separate side-sewer permit required
		•[ ]	Right-of-way use or work / easement, material delivery, etc. If applicable, separate ROW permit required
		[ ]	Land clearing, grading and demolition
		[ ]	Temporary power
		[ ]	Pilings / Shoring / Shotcrete. If applicable, provide survey letter (property line); Geotechnical Engineer / Special Inspector reports of inspections (pile and shoring installation, etc.)
		[ ]	Footings, setbacks, UFER ground. If applicable, provide survey letter (building height and setbacks); Special Inspector reports of inspections (soil bearing capacity, compaction, earthwork, pile installation, etc.)
		[ ]	Foundation walls / concrete columns
		[ ]	Roof and footing drains
		[ ]	Foundation damproofing
		•[ ]	Storm drainage, including (but not limited to): • Connections to storm main in ROW • Detention systems • Infiltration systems • Catch basins including oil-water separator tees • Area drains • Conveyance piping / cleanouts • Storm drain in ROW • Control structures / manholes • Pump systems • Retaining wall drainage
		•[ ]	Water Service
		[ ]	Water Supply
		[ ]	Water as-built drawings
		•[ ]	Side sewer installation, including (but not limited to): • Connections to side sewer main • Connections to existing side sewer • Back-flow valves • Grinder pump systems • Sewer manholes
		[ ]	Driveway / Access road
		[ ]	Underslab electrical / mechanical / plumbing
		[ ]	Underslab insulation / vapor barrier / reinforcing
		[ ]	Underfloor framing
		[ ]	Nailing-Roof sheathing. If applicable, provide Special Inspection letter for lateral wood inspection.
		[ ]	Nailing-Exterior wall and Shearwall. If applicable, provide Special Inspection letter for lateral wood inspection.
		[ ]	Rough hydronic installation
		[ ]	Rough electric installation
		•[ ]	Rough fire alarm (wiring inspection)
		[ ]	Rough plumbing installation (DWV, water)
		[ ]	Rough mechanical
		[ ]	Gas Piping
		•[ ]	Rough fire sprinkler / hydrostatic and flow (bucket) test
		[ ]	Framing and glazing. If applicable, provide Special Inspection letter for lateral wood inspection, welding epoxy anchors, etc.
		[ ]	Masonry construction (fireplace / walls / veneer / etc.)
		[ ]	Insulation installation
		[ ]	Stucco (paper and lath)
		[ ]	Shower pan (or tub)
		[ ]	Miscellaneous
		[ ]	Code Alternative CA1:
		[ ]	Code Alternative CA2:
		[ ]	Impact Fees Paid (If applicable)
		[ ]	**Final Inspection:** Tree Restoration
		[ ]	**Final Inspection:** Fire protection, including (but not limited to): • Sprinkler • Access Road • Fire Code Alternatives (see below) [ ] FCA1: [ ] FCA2: • Fuel Tank Installation • Fire Extinguishing System • Fire Alarm System [ ] FCA3: [ ] FCA4:
		[ ]	**Final Inspection:** Water supply protection, including (but not limited to) backflow devices for: • Waterfront property • Fire / lawn sprinkler • Well water on property • Boiler
		[ ]	**Final Inspection:** Site and utility: includes landscape, utilities and ROW. Site restoration complete and as-built drawings ready for submittal.
		[ ]	**Final Inspection:** Building, including electrical / mechanical / plumbing. If applicable, provide closeout (summary) letters from Engineer, Special Inspectors, Geotechnical Engineer, and exterior wall cladding inspectors (EIFS).

		[ ]	TT
		[ ]	TF
		[ ]	TW
		[ ]	TS
		[ ]	TB

90 DAY TEMPORARY CERTIFICATE OF OCCUPANCY (TCO):
Applicant option. Additional fees will be required and must be approved prior to occupancy. TCO requires tree plantings be completed.

Approved *Start Date* *End Date*

ADDITIONAL REQUIRED CITY INSPECTIONS:
Call the appropriate contact to arrange the inspection.

Required Inspection(s):	Contact:	Phone:	Scheduling:
Arborist on site during excavation	john.kenney@mercergov.org		
Type x Throughout	Building Inspector		
Solid Core Doors	Building Inspector		
Standpipe System - SEPARATE PERMIT	Fire Marshal J. Hicks		
Structural observations specified on - S005	EOR		

IMPACT FEES:
If applicable.
- [ ] Impact fees apply and are due ***prior*** to Final Inspection or on ____, whichever occurs first.
Date

PLAN REVIEW APPROVALS:
Not all review disciplines may be required to review the documents.

JHA	MMRI	RD	JK	JH
Building	*Planning*	*Engineering*	*Tree*	*Fire*

REVISED: *JULY 2019*

SF

PERMIT NUMBER 2205-199

CERTIFICATE OF OCCUPANCY
Issued after all required inspections have been performed and approved.
Approved *Date*

PROJECT NAME: Buttenwieser Wiley Residence

PROJECT ADDRESS: 6838 96th Ave SE, Mercer Island

APPROVED DRAWINGS MUST BE KEPT ON THE BUILDING SITE AT ALL TIMES

REVIEWED FOR CODE COMPLIANCE

JHA *Approved* 3/27/23 *Date*

TOPOGRAPHIC & BOUNDARY SURVEY

LEGAL DESCRIPTION

SOUTH 100 FEET OF THE NORTH 400 FEET OF GOVERNMENT LOT 2, SECTION 30, TOWNSHIP 24 NORTH, RANGE 5 EAST, W.M. TOGETHER WITH SECOND CLASS SHORELANDS ADJOINING SAID PREMISES

SITUATE IN THE CITY OF MERCER ISLAND, COUNTY OF KING, STATE OF WASHINGTON.

BASIS OF BEARINGS

N 89°59'33" E ALONG SUBDIVISION LINE AS SHOWN HERON AND PER R1, R2, R3 & R4.

REFERENCES

R1. RECORD OF SURVEY, VOL. 32, PG. 274, RECORDS OF KING COUNTY, WASHINGTON.
R2. MERCER ISLAND LLR VOL. 42, PG. 150 RECORDS OF KING COUNTY, WASHINGTON.
R3. RECORD OF SURVEY, VOL. 21, PG. 197, RECORDS OF KING COUNTY, WASHINGTON.
R4. MERCER ISLAND SHORT PLAT, VOL. 43, PG. 107, RECORDS OF KING COUNTY, WASHINGTON.

VERTICAL DATUM

NAVD88 PER GPS OBSERVATIONS

SURVEYOR'S NOTES

1. THE TOPOGRAPHIC SURVEY SHOWN HEREON WAS PERFORMED IN JANUARY & JULY OF 2021. THE FIELD DATA WAS COLLECTED AND RECORDED ON MAGNETIC MEDIA THROUGH AN ELECTRONIC THEODOLITE. THE DATA FILE IS ARCHIVED ON DISC OR CD. WRITTEN FIELD NOTES MAY NOT EXIST. CONTOURS ARE SHOWN FOR CONVENIENCE ONLY. DESIGN SHOULD RELY ON SPOT ELEVATIONS.
2. ALL MONUMENTS SHOWN HEREON WERE LOCATED DURING THE COURSE OF THIS SURVEY UNLESS OTHERWISE NOTED.
3. THE TYPES AND LOCATIONS OF ANY UTILITIES SHOWN ON THIS DRAWING ARE BASED ON INFORMATION PROVIDED TO US, BY OTHERS OR GENERAL INFORMATION READILY AVAILABLE IN THE PUBLIC DOMAIN INCLUDING, AS APPLICABLE, IDENTIFYING MARKINGS PLACED BY UTILITY LOCATE SERVICES AND OBSERVED BY TERRANE IN THE FIELD. AS SUCH, THE UTILITY INFORMATION SHOWN ON THESE DRAWINGS ARE FOR INFORMATIONAL PURPOSES ONLY AND SHOULD NOT BE RELIED ON FOR DESIGN OR CONSTRUCTION PURPOSES; TERRANE IS NOT RESPONSIBLE OR LIABLE FOR THE ACCURACY OR COMPLETENESS OF THIS UTILITY INFORMATION. FOR THE ACCURATE LOCATION AND TYPE OF UTILITIES NECESSARY FOR DESIGN AND CONSTRUCTION, PLEASE CONTACT THE SITE OWNER AND THE LOCAL UTILITY LOCATE SERVICE (800-424-5555).
4. SUBJECT PROPERTY TAX PARCEL NO. 3024059010
5. SUBJECT PROPERTY AREA PER THIS SURVEY IS 37,427 S.F. (0.86 ACRES). HOLDING THE STANDARD 18.6' CONTOUR FOR LAKE WASHINGTON, THE AREA IS 37,673 S.F. (0.86 ACRES).
6. THE PROPERTY DESCRIBED HEREON IS THE SAME AS THE PROPERTY DESCRIBED IN FIRST AMERICAN TITLE INSURANCE COMPANY, COMMITMENT NO. RC 40236167, WITH AN EFFECTIVE DATE OF DECEMBER 2, 2020 AND THAT ALL EASEMENTS, COVENANTS AND RESTRICTIONS REFERENCED IN SAID TITLE COMMITMENT OR APPARENT FROM A PHYSICAL INSPECTION OF THE PROPERTY OR OTHERWISE KNOWN TO ME HAVE BEEN PLOTTED HEREON OR OTHERWISE NOTED AS TO THEIR EFFECT ON THE PROPERTY.
7. FIELD DATA FOR THIS SURVEY WAS OBTAINED BY DIRECT FIELD MEASUREMENTS WITH A CALIBRATED ELECTRONIC 5-SECOND TOTAL STATION AND/OR SURVEY GRADE GPS OBSERVATIONS. ALL ANGULAR AND LINEAR RELATIONSHIPS ARE ACCURATE AND MEET THE STANDARDS SET BY WAC 332-130-090.

LEGEND

AREA DRAIN
ASPHALT SURFACE
BRICK SURFACE
BUILDING
CENTERLINE ROW
CO CLEANOUT
CULVERT PIPE
CONCRETE SURFACE
RETAINING WALL
DECK
FENCE LINE (CHAIN LINK)
FENCE LINE (WOOD)
FIRE HYDRANT
G GAS LINE
G GAS METER
GRAVEL SURFACE
CATCH BASIN (TYPE 1)
HUB/TACK
NAIL AS NOTED
MONUMENT IN CASE (FOUND)
MONUMENT (SURFACE, FOUND)
PH POWER HAND HOLE
P POWER METER
P POWER (OVERHEAD)
PP POWER POLE
REBAR AS NOTED (FOUND)
ROCKERY
SS SEWER LINE
SEWER MANHOLE
SD STORM DRAIN LINE
TEL SENTRY TELEPHONE SENTRY
SIZE TYPE TREE (AS NOTED)
W WATER LINE
WM WATER METER
WV WATER VALVE
HB HOSEBIB
YARD LIGHT
WETLAND AREA
WETLAND FLAG
TREE TAG REFERENCE
GEOTECH EXPLORATIONS (APPROXIMATE)

VICINITY MAP

N.T.S.

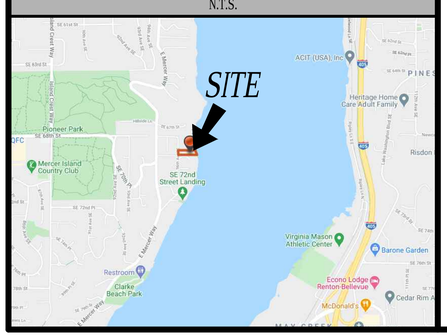

SCHEDULE B ITEMS

3. NOTICE OF TAP OR CONNECTION CHARGES WHICH HAVE BEEN OR WILL BE DUE IN CONNECTION WITH DEVELOPMENT OR RE-DEVELOPMENT OF THE LAND AS DISCLOSED BY RECORDED INSTRUMENT. INQUIRIES REGARDING THE SPECIFIC AMOUNT OF THE CHARGES SHOULD BE MADE TO THE CITY/COUNTY/AGENCY.
CITY/COUNTY/AGENCY: CITY OF MERCER ISLAND
RECORDED: DECEMBER 06, 1977
RECORDING NO.: 7712060812 (NOT PLOTTED-BLANKET IN NATURE)

4. EASEMENT AND THE TERMS AND CONDITIONS THEREOF:
GRANTEE: PUGET SOUND POWER AND LIGHT COMPANY
PURPOSE: ELECTRIC TRANSMISSION AND DISTRIBUTION LINE
AREA AFFECTED: WESTERLY PORTION OF SAID PREMISES
RECORDING NO.: 2616148 (PLOTTED)

5. EASEMENT AND THE TERMS AND CONDITIONS THEREOF:
GRANTEE: MERCER ISLAND SEWER DISTRICT
PURPOSE: SEWER LINE
AREA AFFECTED: A PORTION OF SAID PREMISES
RECORDING NO.: 5750932
(EASEMENT OVER LINE AS CONSTRUCTED ACROSS 2ND CLASS SHORELANDS.-NOT PLOTTED-BLANKET IN NATURE)

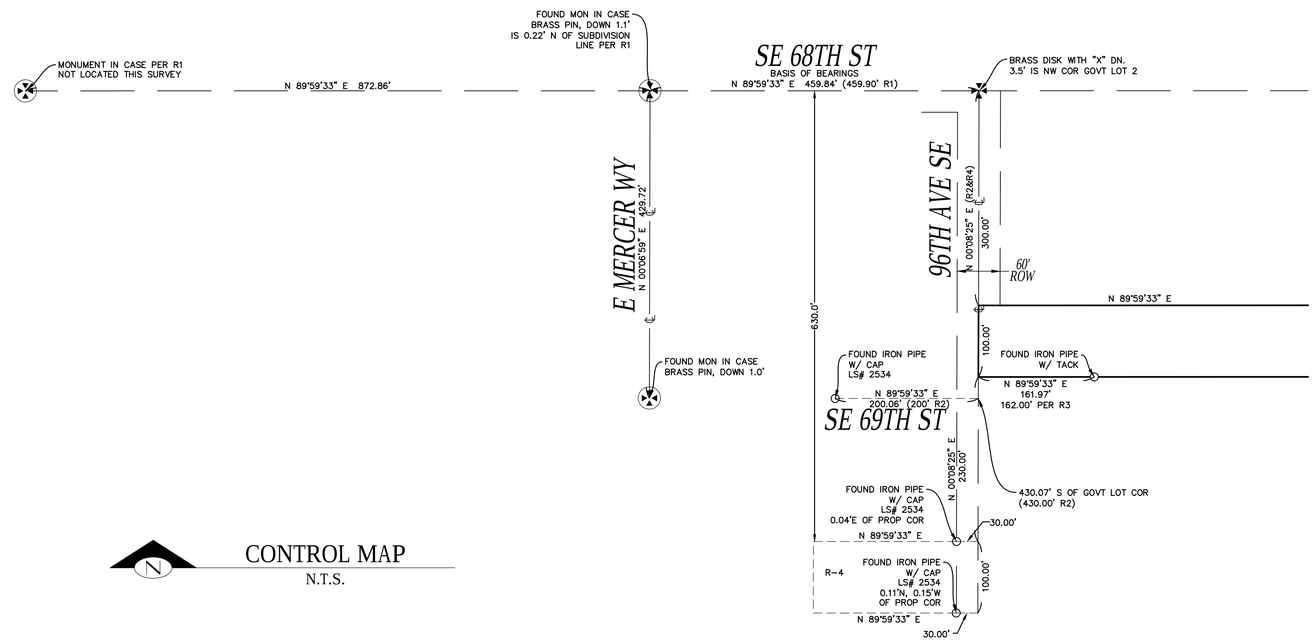

CONTROL MAP
N.T.S.

STEEP SLOPE/BUFFER DISCLAIMER:

THE LOCATION AND EXTENT OF STEEP SLOPES SHOWN ON THIS DRAWING ARE FOR INFORMATIONAL PURPOSES ONLY AND CANNOT BE RELIED ON FOR DESIGN AND/OR CONSTRUCTION. THE PITCH, LOCATION, AND EXTENT ARE BASED SOLELY ON OUR GENERAL OBSERVATIONS ON SITE AND OUR CURSORY REVIEW OF READILY AVAILABLE PUBLIC DOCUMENTS; AS SUCH, TERRANE CANNOT BE LIABLE OR RESPONSIBLE FOR THE ACCURACY OR COMPLETENESS OF ANY STEEP SLOPE INFORMATION. ULTIMATELY, THE LIMITS AND EXTENT OF ANY STEEP SLOPES ASSOCIATED WITH ANY SETBACKS OR OTHER DESIGN OR CONSTRUCTION PARAMETERS MUST BE DISCUSSED AND APPROVED BY THE REVIEWING AGENCY BEFORE ANY CONSTRUCTION CAN OCCUR.

INDEXING INFORMATION

NW 1/4 NE 1/4 SW 1/4 SE 1/4
SE 1/4 NE 1/4
SECTION: 30
TOWNSHIP: 24N
RANGE: 05E, W.M.
COUNTY: KING

REVIEWED FOR CODE COMPLIANCE
March 27, 2023
SITE COPY
MERCER ISLAND WASHINGTON

measure success

TOPOGRAPHIC & BOUNDARY SURVEY
PARCEL NO. 3024059010

BUTTENWIESER / WILEY RESIDENCE
6838 96TH AVE SE
MERCER ISLAND, WA 98040

EDWIN J. GREEN JR. STATE OF WASHINGTON REGISTERED PROFESSIONAL LAND SURVEYOR 22583
2/8/2021

Terrane
10801 Main Street, Suite 102, Bellevue, WA 98004
phone 425.458.4488 support@terrane.net
www.terrane.net

JOB NUMBER:	202552
DATE:	02/04/21
DRAFTED BY:	TGC
CHECKED BY:	EJG/TMM
SCALE:	1" = 10'
REVISION HISTORY	
7/19/21	ADD'L TOPO
8/6/21	PER COMMENTS
SHEET NUMBER	
1 OF 3	

TOPOGRAPHIC & BOUNDARY SURVEY

LEGEND

- AREA DRAIN
- ASPHALT SURFACE
- BRICK SURFACE
- BUILDING
- CENTERLINE ROW
- CO — CLEANOUT
- CULVERT PIPE
- CONCRETE SURFACE
- RETAINING WALL
- DECK
- FENCE LINE (CHAIN LINK)
- FENCE LINE (WOOD)
- FIRE HYDRANT
- G — GAS LINE
- G — GAS METER
- GRAVEL SURFACE
- CATCH BASIN (TYPE 1) HUB/TACK
- NAIL AS NOTED
- MONUMENT IN CASE (FOUND)
- MONUMENT (SURFACE, FOUND)
- PH — POWER HAND HOLE
- P — POWER METER
- P — POWER (OVERHEAD)
- PP — POWER POLE
- REBAR AS NOTED (FOUND)
- ROCKERY
- SS — SEWER LINE
- SEWER MANHOLE
- SD — STORM DRAIN LINE
- TEL SENTRY — TELEPHONE SENTRY
- SIZE TYPE — TREE (AS NOTED)
- W — WATER LINE
- WM — WATER METER
- WV — WATER VALVE
- HOSEBIB
- YARD LIGHT
- WETLAND AREA
- WETLAND FLAG
- #____ — TREE TAG REFERENCE
- GEOTECH EXPLORATIONS (APPROXIMATE)

(IN FEET)
1 INCH = 10 FT.

THE WETLAND FLAGS AND DELINEATION SHOWN HEREON ARE PER THE WATERSHED COMPANY REPORT (REF. NO. 210441), DATED 6/3/21

THE GEOTECH EXPLORATION POINTS SHOWN HEREON ARE APPROXIMATE. LOCATIONS ARE PER INFORMATION PROVIDED BY ASPECT CONSULTING (PROJ. NO. 200631), DATED MARCH 2021

WATERSHED NOTE: "WE CONFIRMED POSITIVE WETLAND CONDITIONS FOR PLANTS, SOIL AND HYDROLOGY THROUGH THE MAJORITY OF THE MAY 2021 DELINEATED WETLAND AREA. WE DID MAKE ONE CHANGE BASED ON A LACK OF HYDRIC SOIL INDICATORS AT THE DOWNSLOPE END OF THE FEATURE. FLAG A-6, THE DOWNSLOPE END OF THE FLAGGING, WAS MOVED UP 24 FEET PARALLEL TO THE DRIVEWAY (AT A BEARING OF APPROXIMATELY 290 DEG.). THE WETLAND STRIP IS CURRENTLY VEGETATED WITH WILLOWHERB, HORSETAIL, AND OTHER HERBACEOUS PLANTS THAT MEET HYDROPHYTIC PLANT COMMUNITY CRITERIA. SOIL ALSO MEET HYDRIC SOIL INDICATORS DESPITE PRESUMED GRAVEL ADDITIONS. DATED JULY 2021

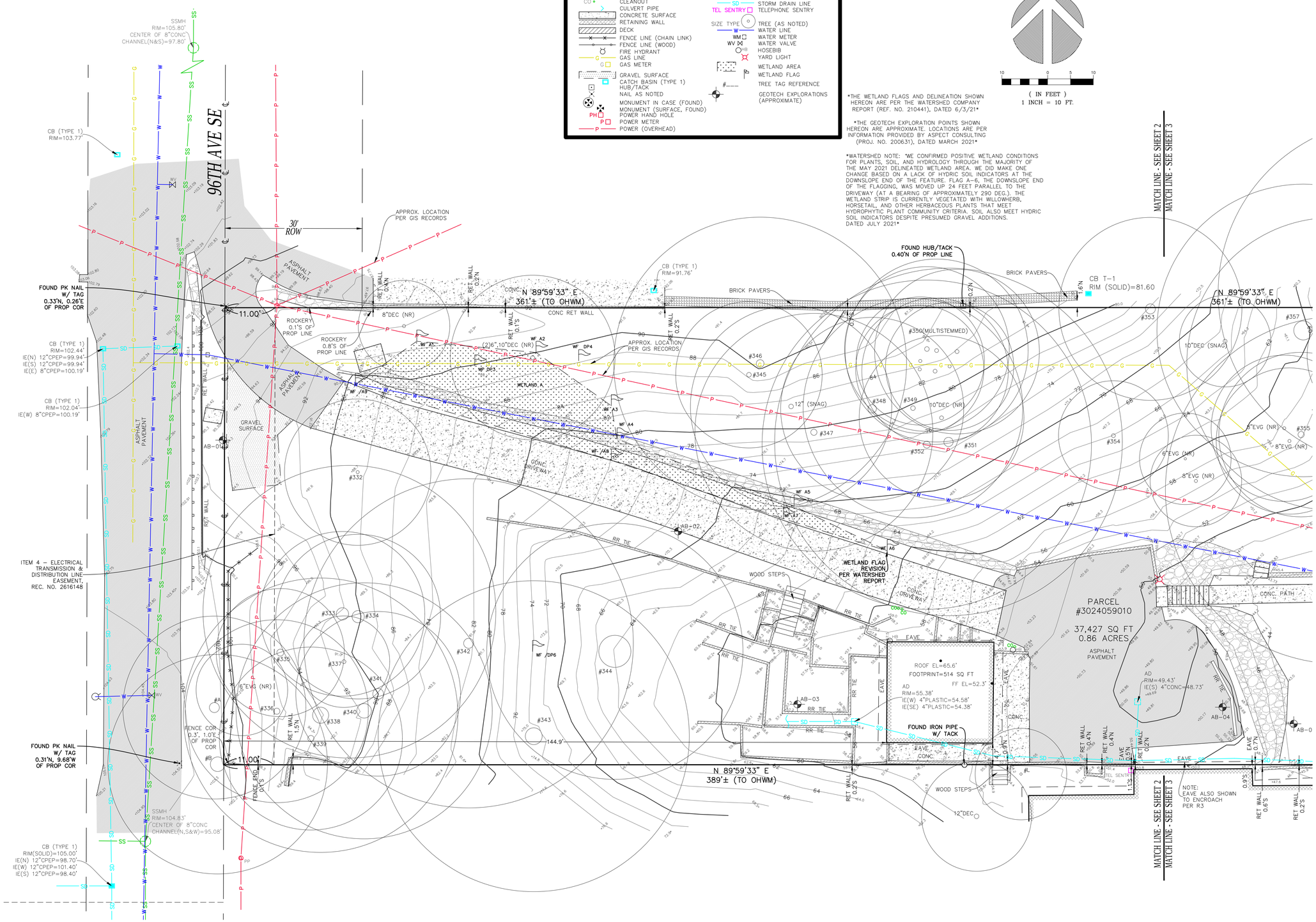

REVIEWED FOR CODE COMPLIANCE
March 27, 2023
SITE COPY

measure success

TOPOGRAPHIC & BOUNDARY SURVEY
PARCEL NO. 3024059010

BUTTENWIESER / WILEY RESIDENCE
6838 96TH AVE SE
MERCER ISLAND, WA 98040

GREEN, JR. EDWIN W. STATE OF WASHINGTON REGISTERED PROFESSIONAL LAND SURVEYOR
08/06/21

Terrane
10801 Main Street, Suite 102, Bellevue, WA 98004
phone 425.458.4488 support@terrane.net
www.terrane.net

JOB NUMBER:	202552
DATE:	02/04/21
DRAFTED BY:	TGC
CHECKED BY:	EJG/TMM
SCALE:	1" = 10'
REVISION HISTORY	
7/19/21	ADDTL TOPO
8/6/21	PER COMMENTS
SHEET NUMBER	
2 OF 3	

TOPOGRAPHIC & BOUNDARY SURVEY

LEGEND

- AREA DRAIN
- ASPHALT SURFACE
- BRICK SURFACE
- BUILDING
- CENTERLINE ROW
- CO — CLEANOUT
- CULVERT PIPE
- CONCRETE SURFACE
- RETAINING WALL
- DECK
- FENCE LINE (CHAIN LINK)
- FENCE LINE (WOOD)
- FIRE HYDRANT
- G — GAS LINE
- G — GAS METER
- GRAVEL SURFACE
- CB — CATCH BASIN (TYPE 1)
- HUB/TACK
- NAIL AS NOTED
- MONUMENT IN CASE (FOUND)
- PH — MONUMENT (SURFACE, FOUND) POWER HAND HOLE
- P — POWER METER
- P — POWER (OVERHEAD)
- PP — POWER POLE
- REBAR AS NOTED (FOUND)
- ROCKERY
- SS — SEWER LINE
- SEWER MANHOLE
- SD — STORM DRAIN LINE
- TEL SENTRY — TELEPHONE SENTRY
- SIZE TYPE — TREE (AS NOTED)
- W — WATER LINE
- WM — WATER METER
- WV — WATER VALVE
- HOSEBIB
- YARD LIGHT
- WETLAND AREA
- WETLAND FLAG
- TREE TAG REFERENCE
- GEOTECH EXPLORATIONS (APPROXIMATE)

REVIEWED FOR CODE COMPLIANCE
March 27, 2023
SITE COPY
MERCER ISLAND WASHINGTON

10 0 5 10
(IN FEET)
1 INCH = 10 PT.

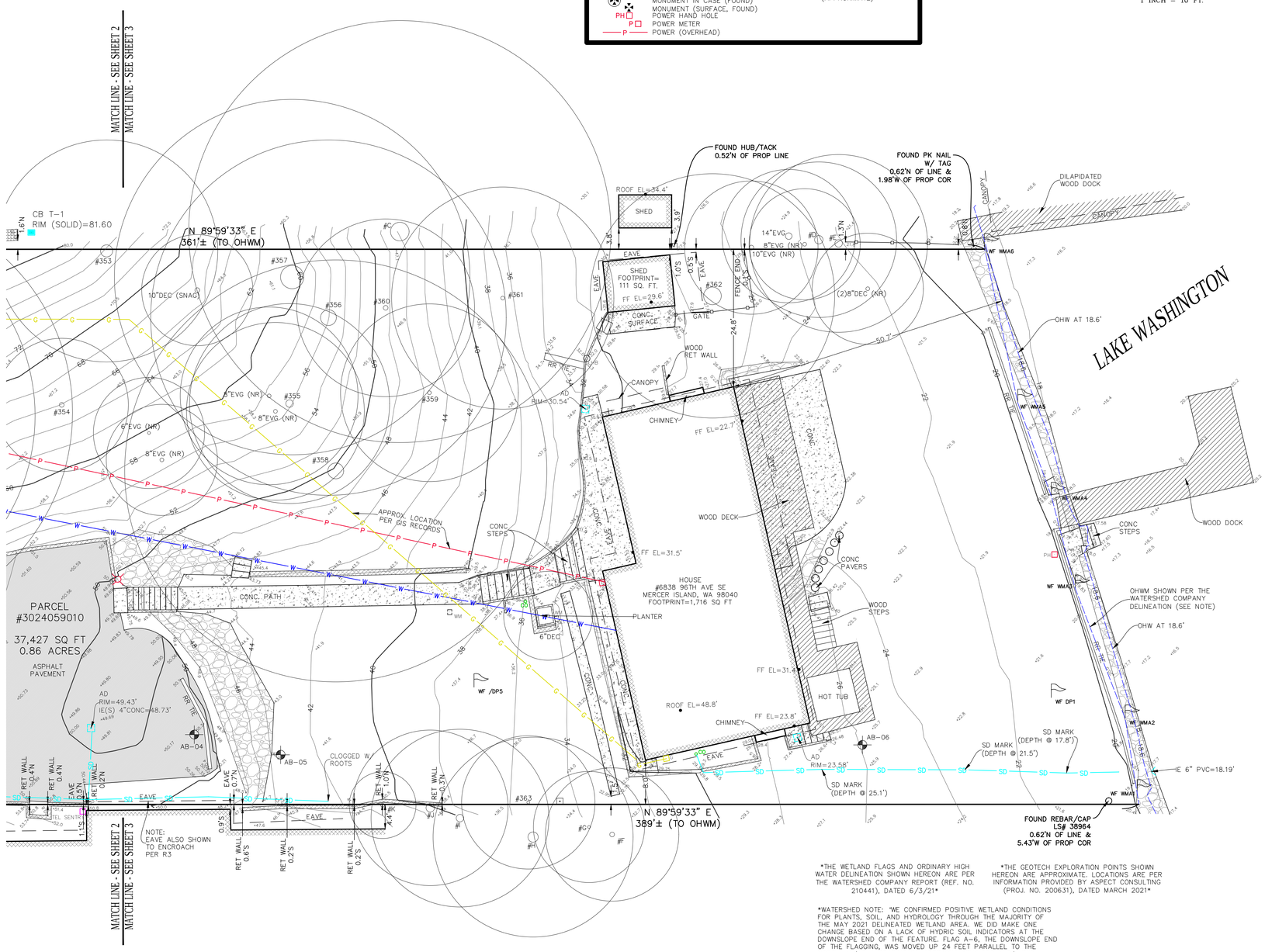

TREE INVENTORY

PER ARBOR REPORT
BY: TREE SOLUTIONS INC.
DATED: 5/07/21

NUMBER	DIAMETER	TYPE/NAME
332	17" DBH	PRUNUS EMARGINATA-BITTER CHERRY
333	35" DBH	THUJA PLICATA-WESTERN REDCEDAR
334	28.7" DBH	THUJA PLICATA-WESTERN REDCEDAR
335	16.2" DBH	THUJA PLICATA-WESTERN REDCEDAR
336	13.7" DBH	ACER MACROPHYLLUM-BIGLEAF MAPLE
337	9.9" DBH	THUJA PLICATA-WESTERN REDCEDAR
338	41.7" DBH	PSEUDOTSUGA MENZIESII-DOUGLAS FIR
339	21.7" DBH	ACER MACROPHYLLUM-BIGLEAF MAPLE
340	32.0" DBH	PSEUDOTSUGA MENZIESII-DOUGLAS FIR
341	23.5" DBH	ACER MACROPHYLLUM-BIGLEAF MAPLE
342	19.3" DBH	ALNUS RUBRA-RED ALDER
343	42.2 DBH	THUJA PLICATA-WESTERN REDCEDAR
344	49.7" DBH	THUJA PLICATA-WESTERN REDCEDAR
345	12.6" DBH	ACER MACROPHYLLUM-BIGLEAF MAPLE
346	26.3" DBH	ACER MACROPHYLLUM-BIGLEAF MAPLE
347	23.5" DBH	ACER MACROPHYLLUM-BIGLEAF MAPLE
348	19.4" DBH	ACER MACROPHYLLUM-BIGLEAF MAPLE
349	18.4" DBH	ACER MACROPHYLLUM-BIGLEAF MAPLE
350	24.8" DBH	ACER MACROPHYLLUM-BIGLEAF MAPLE
351	21.7" DBH	ACER MACROPHYLLUM-BIGLEAF MAPLE
352	18.5" DBH	ACER MACROPHYLLUM-BIGLEAF MAPLE
353	20.0" DBH	PSEUDOTSUGA MENZIESII-DOUGLAS FIR
354	10.0" DBH	PSEUDOTSUGA MENZIESII-DOUGLAS FIR
355	15.2" DBH	PSEUDOTSUGA MENZIESII-DOUGLAS FIR
356	30.0" DBH	ACER MACROPHYLLUM-BIGLEAF MAPLE
357	55.5" DBH	THUJA PLICATA-WESTERN REDCEDAR
358	26.0" DBH	ACER MACROPHYLLUM-BIGLEAF MAPLE
359	12.0" DBH	LLEX AQUIFOLIUM-ENGLISH HOLLY
360	12.9" DBH	LLEX AQUIFOLIUM-ENGLISH HOLLY
361	15.4" DBH	CORYLUS CORNUTA-BEAKED HAZELNUT
362	31.0" DBH	CHAMAECYPARIS PISIFERA-SAWARA CYPRESS
363	8.0" DBH	MAGNOLIA X SOULANGIANA-SAUCER MAGNOLIA
ACPA-NR	6.0" DBH	ACER PALMATUM-JAPANESE MAPLE
A	28.0" DBH	THUJA PLICATA-WESTERN REDCEDAR
B	32.0" DBH	THUJA PLICATA-WESTERN REDCEDAR
C	32.0" DBH	THUJA PLICATA-WESTERN REDCEDAR
D	14.0" DBH	THUJA PLICATA-WESTERN REDCEDAR
E	16.0" DBH	THUJA PLICATA-WESTERN REDCEDAR
F	15.0" DBH	THUJA PLICATA-WESTERN REDCEDAR
G	8.6" DBH	THUJA PLICATA-WESTERN REDCEDAR
H	5.5" DBH	THUJA PLICATA-WESTERN REDCEDAR
I	14.0" DBH	THUJA PLICATA-WESTERN REDCEDAR
J	12.0" DBH	CUPROCYPARIS LEYLANDI-LEYLAND CYPRESS
K	15.0" DBH	CUPROCYPARIS LEYLANDI-LEYLAND CYPRESS
L	5.0" DBH	ACER PALMATUM-JAPANESE MAPLE

(NR) NOT REGULATED – BELOW REGULATED SIZE

THE WETLAND FLAGS AND ORDINARY HIGH WATER DELINEATION SHOWN HEREON ARE PER THE WATERSHED COMPANY REPORT (REF. NO. 210441), DATED 6/3/21

THE GEOTECH EXPLORATION POINTS SHOWN HEREON ARE APPROXIMATE. LOCATIONS ARE PER INFORMATION PROVIDED BY ASPECT CONSULTING (PROJ. NO. 200631), DATED MARCH 2021

*WATERSHED NOTE: "WE CONFIRMED POSITIVE WETLAND CONDITIONS FOR PLANTS, SOIL, AND HYDROLOGY THROUGH THE MAJORITY OF THE MAY 2021 DELINEATED WETLAND AREA. WE DID MAKE ONE CHANGE BASED ON A LACK OF HYDRIC SOIL INDICATORS AT THE DOWNSLOPE END OF THE FEATURE. FLAG A-6, THE DOWNSLOPE END OF THE FLAGGING, WAS MOVED UP 24 FEET PARALLEL TO THE DRIVEWAY (AT A BEARING OF APPROXIMATELY 290 DEG.). THE WETLAND STRIP IS CURRENTLY VEGETATED WITH WILLOWHERB, HORSETAIL, AND OTHER HERBACEOUS PLANTS THAT MEET HYDROPHYTIC PLANT COMMUNITY CRITERIA. SOIL ALSO MEET HYDRIC SOIL INDICATORS DESPITE PRESUMED GRAVEL ADDITIONS. DATED JULY 2021"

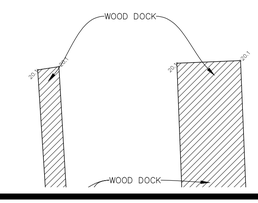

measure success

TOPOGRAPHIC & BOUNDARY SURVEY
PARCEL NO. 3024059010

BUTTENWIESER / WILEY RESIDENCE
6838 96TH AVE SE
MERCER ISLAND, WA 98040

EDWIN J. GREEN JR. STATE OF WASHINGTON REGISTERED PROFESSIONAL ENGINEER 08/06/21

Terrane
10801 Main Street, Suite 102, Bellevue, WA 98004
phone 425.458.4488 support@terrane.net
www.terrane.net

JOB NUMBER:	202552
DATE:	02/04/21
DRAFTED BY:	TGC
CHECKED BY:	EJG/TMM
SCALE:	1" = 10'
REVISION HISTORY	
7/19/21	ADDTL TOPO
8/6/21	PER COMMENTS
SHEET NUMBER	
3 OF 3	

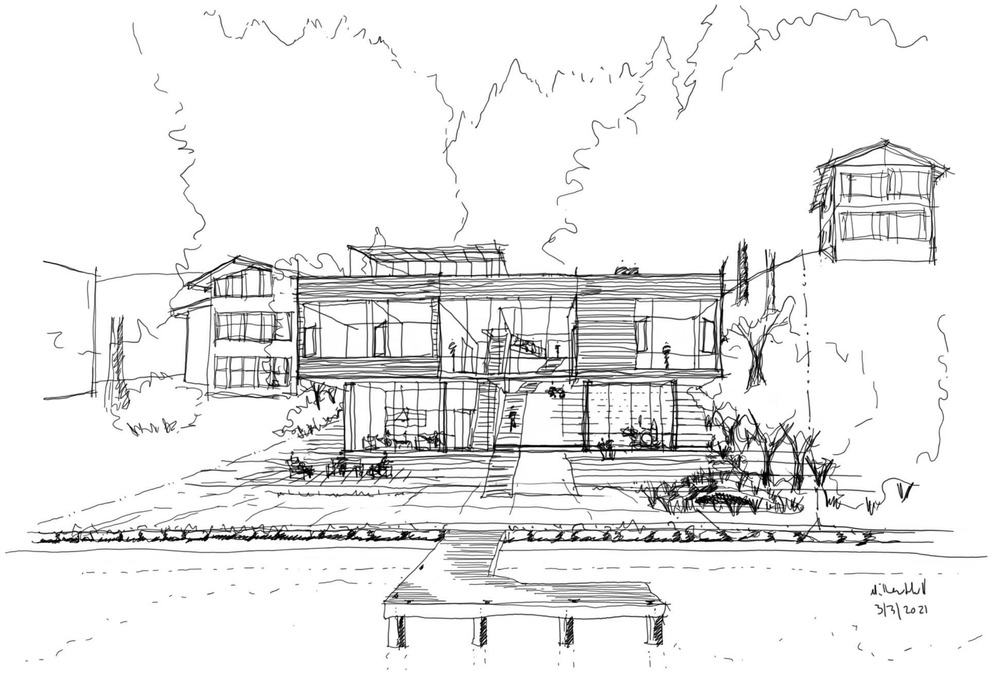

MERCER ISLAND HOUSE: CASCADE

100% CONSTRUCTION DOCUMENTS

MERCER ISLAND, WA
FEBRUARY 24, 2023

VICINITY MAP - ADJACENT PARCELS

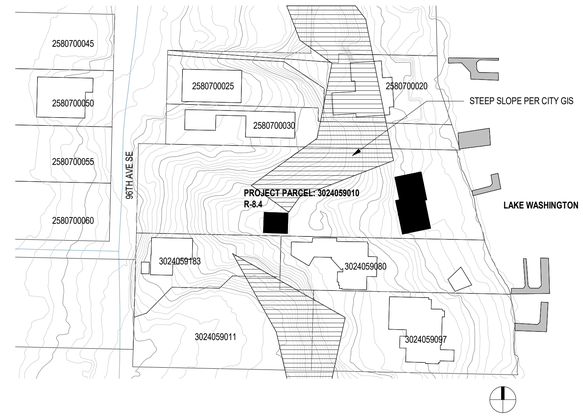

PROJECT DESCRIPTION

THE PROJECT SITE IS A WATERFRONT SITE ON THE SOUTHEAST SIDE OF MERCER ISLAND. THE SLOPED SITE RUNS PRIMARILY WEST-EAST, ACCESSED VIA 96TH AVENUE SE AND DESCENDS TO THE LAKE WASHINGTON SHORELINE. THREE STRUCTURES CURRENTLY OCCUPY THE SITE: A PRIMARY TWO-STORY RESIDENCE, A TWO-CAR GARAGE AND A SMALL POTTING SHED. THE HOUSE, GARAGE AND SHED ARE IN POOR STATE OF REPAIR AND WILL BE DEMOLISHED FOR THE CONSTRUCTION OF THE NEW RESIDENCE.

THERE ARE SEVERAL SENSITIVE AND ENVIRONMENTALLY CRITICAL AREAS ON THE SITE. THE ENTIRE PROPERTY IS CHARACTERIZED BY RELATIVE STEEPNESS AS THERE IS A FREQUENT CHANGE IN GRADE ACROSS THE FULL SPAN OF THE PARCEL. CITY OF MERCER ISLAND CRITICAL AREAS MAPPING INDICATES THAT THE CENTRAL REGION OF THE SITE IS A DESIGNATED STEEP SLOPE AREA AND NEARLY THE ENTIRE PROPERTY IS LOCATED IN A PROTECTED STEEP SLOPE AREA. IN ADDITION, THE WHOLE SITE IS MAPPED AS A LANDSLIDE HAZARD AREA. OTHER ENVIRONMENTAL HAZARDS IDENTIFIED OVER THE ENTIRE SITE INCLUDE POTENTIAL SLIDE AND EROSION HAZARD AREAS. THE EASTERN REGION OF THE PROPERTY IS LOCATED WITHIN A DESIGNATED SEISMIC HAZARD AREA.

THE NEW RESIDENCE WILL BE A THREE-STORY STRUCTURE AND NEW DETACHED GARAGE. A MAJORITY OF THE PROPOSED FOOTPRINT IS LOCATED WITHIN THE EXISTING BUILDING PAD. THE FIRST TWO STORIES ARE LOCATED NEAR THE WATER, WITH THE THIRD STORY EXTENDING WEST TOWARD THE EXISTING PARKING PAD. THE THIRD STORY CONNECTS TO THE PARKING PAD WITH AN ELEVATED COVERED WALKWAY WHICH WILL ALLOW THE NEW RESIDENTS TO AGE-IN-PLACE AT THIS HOME.

A CENTRAL EXTERIOR STAIRWAY WILL CONNECT THE UPPER PARKING PAD TO THE WATERFRONT. LANDSCAPING FEATURES WILL BE INCLUDED THROUGHOUT.

PROJECT INFORMATION

TAX PARCEL NUMBER	302405-9010
JURISDICTION	CITY OF MERCER ISLAND
PERMIT NUMBER	LAND USE: CAO21-007, SHL21-042, SEP21-027 BUILDING PERMIT: 2205-199
LEGAL DESCRIPTION	SOUTH 100 FEET OF THE NORTH 400 FEET OF GOVERNMENT LOT 2, SECTION 30, TOWNSHIP 24 NORTH, RANGE 5 EAST, W.M. TOGETHER WITH SECOND CLASS SHORELANDS ADJOINING SAID PREMISES
YEAR BUILT:	1934
YEAR RENOVATED:	1970
APPLICABLE CODES:	2018 INTERNATIONAL BUILDING CODE (IBC) 2018 INTERNATIONAL RESIDENTIAL CODE (IRC) 2018 INTERNATIONAL MECHANICAL CODE (IMC) 2018 INTERNATIONAL FUEL GAS CODE (IFGC) 2018 UNIFORM PLUMBING CODE (UPC) 2018 INTERNATIONAL FIRE CODE (IFC) 2018 INTERNATIONAL EXISTING BUILDING CODE 2018 INTERNATIONAL SWIMMING POOL AND SPA CODE 2018 WASHINGTON STATE ENERGY CODE (WSEC) ICC/ANSI A117.1-09, ACCESSIBLE AND USABLE BUILDINGS AND FACILITIES, WITH STATEWIDE AND CITY AMENDMENTS
ZONE: LOT SIZE:	R-8.4 SINGLE FAMILY 37427 SQUARE FEET PER SURVEY DATED 8/6/21
CRITICAL AREAS:	STEEP SLOPE PER SURVEY, LANDSCAPE HAZARDS, SEISMIC HAZARDS AND EROSION HAZARDS PER GEOTECH. WETLAND DELINEATION PER ECOLOGIST
ACCESS:	PRIVATE DRIVEWAY FROM 96TH AVE SE
EASEMENTS:	UTILITY EASEMENT: PUGET SOUND POWER AND LIGHT COMPANY, ELECTRIC TRANSMISSION AND DISTRUBUTION LINE, 11' FROM WEST PROPERTY LINE UTILITY EASEMENT: MERCER ISLAND SEWER DISTRICT, IN LAKE WASHINGTON
2 RECORDINGS	NOT AN ADU AFFIDAVIT: 20220929000290 SITE SUBDIVISION COVENANT: 20221025000362
ADDITIONAL INFORMATION	ADDITIONAL CODE ANALYSIS AND PROJECT INFORMATION ON G100

PROJECT TEAM

OWNER
JANET BUTTENWIESER & MATT WILEY
6838 96TH AVE SE
MERCER ISLAND, WA 98040
TEL: 206.388.8558
CONTACT: MATT WILEY

ARCHITECT
THE MILLER HULL PARTNERSHIP, LLC
71 COLUMBIA STREET, 6TH FLOOR
SEATTLE, WA 98104
TEL: 206.254.2022
CONTACT: APRIL NG

CIVIL ENGINEER
LPD ENGINEER PLLC
1932 1ST AVENUE, #201
SEATTLE, WA 98101
TEL: 206.725.1211
CONTACT: LAURIE PFARR

GENERAL CONTRACTOR
KREKOW JENNINGS INC
2011 E OLIVE STREET
SEATTLE, WA 98122
TEL: 206.625.0505
CONTACT: BEN BLACK

LANDSCAPE ARCHITECT
BERGER PARTNERSHIP
1927 POST ALLEY, #2
SEATTLE, WA 98101
TEL: 206.325.6877
CONTACT: SHANNON LESLIE

STRUCTURAL ENGINEER
PCS STRUCTURAL SOLUTIONS
1011 WESTERN AVENUE, SUITE 810
SEATTLE, WA 98104
TEL: 206.292.5076
CONTACT: TED RYAN

GEOTECHNICAL ENGINEER
ASPECT CONSULTING LLC
710 2ND AVE, #550
SEATTLE, WA 98104
TEL: 206.413.5398
CONTACT: CHIP BARNETT

MECHANICAL ENGINEER
SAZAN GROUP
600 STEWART STREET, SUITE 1400
SEATTLE, WA 98104
TEL: 206.267.1700
CONTACT: TOM MARSEILLE

ARBORIST
TREE SOLUTIONS INC.
2940 WESTLAKE AVE N, #200
SEATTLE, WA 98109
TEL: 206.528.4670
CONTACT: CONNOR MCDERMOTT

ECOLOGIST
THE WATERSHED COMPANY
750 6TH STREET S
KIRKLAND, WA 98033
TEL: 425.822.5242
CONTACT: NELL LUND

LIGHTING DESIGNER
LIGHTING DESIGNS, INC
114 ALASKAN WAY SOUTH #602
SEATTLE, WA 98104
TEL: 206.293.2813
CONTACT: SIDNEY GENETTE

ENVELOPE CONSULTANT
4EA BUILDING SCIENCE
12721 30TH AVENUE NE, 2ND FLOOR
SEATTLE, WA 98125
TEL: 206.728.2358
CONTACT: JEFF SPEERT

SHEET INDEX

NO.	SHEET NAME
SURVEY	
SURVEY	SURVEY
GENERAL	
G000	SHEET INDEX & PROJ INFO
G100	SITE PLAN
G101	SITE PLAN
1 G102	SITE SECTIONS
G200	CODE DIAGRAMS
G201	CODE DIAGRAMS
CIVIL	
C100	TESC AND DEMOLITION PLAN
1 C101A	TREE RETENTION PLAN A - REMOVAL
C101B	TREE RETENTION PLAN B - PROPOSED
C102	TESC DETAILS
C200A	GRADING PLAN
C200B	DRAINAGE PLAN
C300	UTILITIES & PAVING PLAN
C400	DETAILS
C401	DETAILS
C402	DETAILS
LANDSCAPE	
L100	COMPOSITE SITE PLAN
L101	LAYOUT & MATERIAL PLAN
L102	LANDSCAPE ENLARGEMENTS
L103	LANDSCAPE ENLARGEMENTS
L104	ROOF LAYOUT & MATERIAL PLAN & DETAILS
L301	SITE SECTIONS
L302	SITE SECTIONS
L401	SITE DETAILS - PAVING & STAIRS
L402	SITE DETAILS - SPINE / RUNNEL
L403	SITE DETAILS - SPINE / RUNNEL
L404	SITE DETAILS - SPINE / RUNNEL
L405	SITE DETAILS
L406	SITE DETAILS
L407	SITE DETAILS - ECA WALL
L408	SITE DETAILS - ECA WALL
L601	PLANTING PLAN
L602	ROOF PLANTING PLAN & DETAILS
L603	PLANTING SCHEDULE
L604	PLANTING DETAILS
L605	PLANTING SCHEDULE, DETAILS & NOTES
ARCHITECTURAL	
A001	LEGENDS, NOTES & ABBREVIATIONS
A010	ASSEMBLIES
A030	DOORS, LOUVERS & FINISH LEGEND
A050	FRAME ELEVATIONS
A111	LEVEL 1 - FLOOR PLAN
A113	LEVEL 1 - REFLECTED CEILING PLAN
A121	LEVEL 2 - FLOOR PLAN
A123	LEVEL 2 - REFLECTED CEILING PLAN
A131	LEVEL 3 - FLOOR PLAN
A133	LEVEL 3 - REFLECTED CEILING PLAN
A141	ROOF PLAN
A151	GARAGE PLANS
A152	GARAGE ELEVATIONS, SECTIONS
A161	COVERED WALKWAY PLANS
A162	COVERED WALKWAY ELEV, SECTIONS
A171	SHED PLANS, ELEV, SECTION
A201	BUILDING ELEVATIONS
A202	BUILDING ELEVATIONS
A203	BUILDING ELEVATIONS
A301	BUILDING ELEVATIONS / SECTIONS
A302	BUILDING SECTIONS
A303	BUILDING SECTIONS
A350	FENCE ELEVATIONS
A410	VERTICAL TRANSPORTATION
A411	VERTICAL TRANSPORTATION
A412	VERTICAL TRANSPORTATION
STRUCTURAL	
S000	COVER SHEET
S001	GENERAL NOTES
S002	GENERAL NOTES
S003	GENERAL NOTES
S004	GENERAL NOTES
S005	GENERAL NOTES
S110	PLAN NOTES
S111a	PILE PLAN
S111b	PILE PLAN
S112	LEVEL 1 - FOUNDATION PLAN
S121	LEVEL 2 - FLOOR FRAMING PLAN
S121P	LEVEL 2 - FLOOR FRAMING PENETRATION PLAN
S131	LEVEL 3 - FLOOR FRAMING PLAN
S131P	LEVEL 3 - FLOOR FRAMING PENETRATION PLAN
S141	ROOF - FRAMING PLAN
S151	GARAGE AND SHED PLANS
S161	COVERED WALKWAY PLANS
S301	SLAB-ON-GRADE DETAILS
S302	FOUNDATION DETAILS
S303	FOUNDATION DETAILS
S304	FOUNDATION DETAILS
S305	FOUNDATION DETAILS
S400	SOLDIER PILE WALL PLAN
S401	SHORING WALL ELEVATIONS
S402	SHORING WALL ELEVATIONS
S403	SHORING DETAILS
2 S410	TEMPORARY SHORING WALL PLANS & ELEVATIONS
S411	TEMPORARY SHORING WALL DETAILS
S501	STEEL FRAMING DETAILS
S701	WOOD FRAMING DETAILS
S702	WOOD FRAMING DETAILS
S703	WOOD FRAMING DETAILS
S704	WOOD FRAMING DETAILS
S705	WOOD FRAMING DETAILS
S706	WOOD FRAMING DETAILS
S707	WOOD FRAMING DETAILS
S708	WOOD FRAMING DETAILS
S709	WOOD FRAMING DETAILS
S710	WOOD FRAMING DETAILS

MILLER HULL
The Miller Hull Partnership, LLP
Architecture and Planning
Polson Building
71 Columbia, Sixth Floor
Seattle, WA 98104

Phone: 206.682.6837
Contact: Name

STAMP

9309 REGISTERED ARCHITECT BRIAN COLEY STATE OF WASHINGTON

MERCER ISLAND REVIEWED FOR CODE COMPLIANCE March 27, 2023 SITE COPY

MERCER ISLAND HOUSE: CASCADE

6838 96TH AVE SE
MERCER ISLAND, WA 98040

SUBMITTAL

100% CONSTRUCTION DOCUMENTS

FEBRUARY 24, 2023

REVISIONS

No.	Description	Date
1	Building Permit Resubmittal	10/27/22
2	Building Permit Resubmittal 2	1/6/23
3	Building Permit Resubmittal 3	2/24/23

Drawn: AN
Checked: AN
M|H Proj No.: A20.0085.00

Issue Date: FEBRUARY 24, 2023

SHEET

SHEET INDEX & PROJ INFO

G000

ENERGY CODE NOTES

CLIMATE ZONE	4C KING
ENVELOPE PROVISIONS R402.1	PRESCRIPTIVE REFER TO ASSEMBLIES SHEET A010 FOR U-FACTORS AND R-VALUES REFER TO FRAME ELEVATIONS SHEET A050 FOR U-FACTORS FOR FENESTRATION SYSTEMS
1 TABLE 402.1.1 CLIMATE ZONE 5 AND MARINE 4	PROVIDE THESE PERFORMANCE VALUES AT A MINUMUM: FENESTRATION U-0.30 SKYLIGHT U-0.50 CEILING R-49 WOOD FRAME WALL 21 INT FLOOR R-30 BELOW GRADE WALL 10/15/21 int + 5TB SLAB R-VALUE & DEPTH 10, 2FT
1 CERTIFICATE R401.3	A PERMANENT CERTIFICATE SHALL BE COMPLETED BY THE BUILDER OR OTHER APPROVED PARTY AND POSTED ON A WALL IN THE MECHANICAL ROOM. CERTIFICATE INFO TO INCLUDE: R-VALUES OF ALL INSULATION U-FACTORS AND SHGC FOR FENESTRATION BUILDING AIR LEAKAGE TESTING WHOLE-HOUSE MECHANICAL VENTILATION SYSTEM FLOW RATE TEST
1 AIR BARRIER R402.4.1.1	A CONTINUOUS AIR BARRIER SHALL BE INSTALLED IN THE BUILDING ENVELOPE. BREAKS OR JOINTS IN THE AIR BARRIER SHALL BE SEALED.THE BUILDING SHALL BE TESTED AND VERIFIED AS HAVING AN AIR LEAKAGE RATE OF NOT EXCEEDING 2 AIR CHANGES PER HOUR AT 50 PASCALS.
TESTING R403.2.2	PROVIDE THE FOLLOWING TESTING REPORTS DUCT LEAKAGE TESTING (R403.2.2) POST CONSTRUCTION TEST (R403.2.2.1) ROUGH-IN TEST (R403.2.2.3)
LIGHTING REQUIPMENT R404.1	A MINIMUM OF 90% OF PERMANENTLY INSTALLED LAMPS IN LIGHTING FIXTURES SHALL BE LED,
ENERGY CREDITS R406.3	MEDIUM DWELLING UNIT: 6 CREDITS 1.0 **FUEL NORMALIZATION CREDIT - SYSTEM TYPE 2** HEAT PUMP 1.0 **AIR LEAKAGE CONTROL AND VENTILATION OPTION 2.2** TESTED AIR LEAKAGE 2.0 ACH/50 HEAT RECOVERY VENTILATION SYSTEM WITH MINIMUM SENSIBLE HEAT RECOVER EFFICIENCY OF 0.65 0.5 **HIGH EFFICIENCY HVAC DISTRIBUTION SYSTEM OPTION 4.1** ALL DUCTS, AIR HANDLERS LOCATED IN CONDITIONED SPACE DUCT LEAKAGE SHALL BE LIMITED TO 3 CFM PER 100 SQUARE FEET OF CONDITIONED FLOOR AREA 1.5 **EFFICIENT WATER HEATING OPTION 5.4** ELECTRIC HEAT PUMP WATER HEATER MEETING THE STANDARDS FOR TIER I OF NEEA'S ADVANCED WATER HEATING SPECIFICATION 3.0 **RENEWABLE ELECTRIC ENERGY OPTION 6.1** 1,200 KWH PER ENERGY CREDIT MORE THAN 3,600 KWH PROVIDED REFERENCE SOLAR ANALYSIS 1 **7 TOTAL ENERGY CREDITS**

MECHANICAL DESIGN CRITERIA

MEP BASIS OF DESIGN	REFERENCE THE MECHANICAL, ELECTRICAL, PLUMBING BASIS OF DESIGN DOCUMENT FOR ADDITIONAL DESIGN CRITERIA AND REQUIREMENTS.
OUTDOOR DESIGN CONDITIONS	SUMMER... 83.0 DEGREES FARENHEIGHT DB WINTER... 24.0 DEGREES FARENEIGHT DB
INDOOR DESIGN CONDITIONS	INTERIOR SPACES ARE DESIGNED TO MAINTAIN THE FOLLOWING INTERIOR DESIGN CONDITIONS. SUMMER 75 DEGREES FARENHEIGHT MINIMUM (BEDROOMS WITH FULL AIR CONDITION) WINTER 72 DEGREES FARENHEIGHT MAXIMUM (ALL SPACES)
VENTILATION CRITERIA	ALL OCCUPIED SPACES TO BE PROVIDED WITH VENTILATION AND EXHAUST IN ACCORDANCE WITH CHAPTER 51-51 WAC (2018 INTERNATIONAL RESIDENTIAL CODE, EFFECTIVE JULY 1, 2020). WHOLE HOUSE MECHANICAL VENTILATION SHALL BE DESIGNED ASSUMING CONTINUOUS OPERATION.
AIRSIDE SIZING CRITERIA	HVAC DUCT AND AIR REGISTER SIZING WILL BE BASED ON BEST PRACTICES PRESCRIBED BY ASHRAE AND TO MEET SPECIFIED NOISE CRITERA PROVIDED BELOW. AIR INTAKE LOUVERS (WHERE REQUIRED) MAX. VELOCITY: 500 FPM (NET FREE AREA) MAX PRESSURE DROP: > 0.1 IN W.G. EXHAUST LOUVERS MAX VELOCITY: 500 FPM (NET FREE AREA) MAX PRESSURE DROP: > 0.1 IN W.G.
INSULATION CRITERIA	PROJECT WILL COMPLY WITH SECTION R403 OF WSEC 2018 INCLUDING: HEATING PIPING: MIN R-6 SERVICE HOT WATER PRIPING: MIN R-3 SERVICE HOT WATER HEATER: PLACED ON AN INCOMPRESSIBLE, INSULATED SURFACE WITH A MINIMUM THERMAL RESISTANCE OF R-10 DUCTS OUTSIDE THERMAL ENVELOPE: MIN R-8
DUCT AND AIR HANDLER...	DUCTS AND AIR HANDLERS TO BE SEALED TO COMPLY WITH SECTION R403.3.2 DUCT LEAK TESTING EXCEPTION (R403.3.3) TO BE TAKEN GIVEN SYSTEMS ARE ENTIRELY INDOORS (EXCEPTION 1) AND/OR HRVS (EXCEPTION 2)

FIRE PROTECTION

FIRE AREA SQUARE FOOTAGE CALCULATION	LEVEL 1 1046 SF LEVEL 2 1829 SF LEVEL 3 1135 SF COVERED PATIO 625 SF 4635
FIRE ACCESS	EXISTING DRIVEWAY DOES NOT MEET FIRE ACCESS REQUIREMENT. CODE ALTERNATES WILL NEED TO BE PURSUED.
FIRE FLOW (HYDRANTS) IFC APPENDIX B	HYDRANT FLOW REQUIRED FOR 4801 - 6,200 SF REQUIRES 2000 GPM WITH 50% CREDIT DUE TO A FIRE SPRINKLER SYSTEM. NEAREST HYDRANT: HS-36 1025 GMP AT 72 PSI DISTANCE FROM HDRANT TO REAR OF HOUSE: 497' DISTANCE FROM HYDRANT TO ACCESS: 87'/DRIVEWAY, 302' TO GARAGE
SPRINKLERS	ALL NEW CONSTRUCTION IS REQUIRED TO INSTALL A MINIMUM OF A NFPA 13D FIRE SPRINKLER SYSTEM PROPOSED: NFPA 13R
FIRE ALARM SYSTEMS R314.3	HOUSEHOLD FIRE ALARM SYSTEM TO BE INSTALLED PER NFPA 72 CHAPTER 29. SMOKE ALARMS SHALL BE INSTALLED AS FOLLOWS: IN ALL SLEEPING ROOMS OUTSIDE OF EACH SLEEPING AREA ON EVERY LEVEL OF A DWELLING UNIT CARBON MONOXIDE ALARMS ARE NOT PROVIDED. NO FUEL-FIRED APPLIANCES OR ATTACHED GARAGE
FIRE ALTERNATES	ALL GYPSUM BOARD WILL BE 1-HOUR RATED. ALL SOLID WOOD DOORS WILL BE SOLID CORE. FDC CONNECTION WILL BE PROVIDED AT GARAGE AND LAKESIDE AS REQUIRED BY FIRE MARSHAL

ZONING CODE ANALYSIS

SECTION	EXISTING / REQUIRED	PROPOSED	COMPLIES	SHEET
ZONING	R-8.4 - SINGLE-FAMILY	R-8.4	YES	G000
CONSTRUCTION TYPE	RESIDENTIAL - TYPE VA	TYPE VA	YES	G100
LOT SIZE	37,427 SF HIGHEST ELEVATION POINT: 102. 25' LOWEST ELEVATION POINT: 18.46' ELEVATION DIFFERENCE: 83.79' HORIZONTAL DIFFERENCE BETWEEN HIGH AND LOW POINTS: 355.66' LOT SLOPE: 83.69' / 355.66' = 24%	1	YES	SURVEY 2/G200
YARD REQUIREMENTS MICC 19.02.020.C	FRONT YARD SETBACK: 20' COMBINED SIDE YARD SETBACK: 17' MIN. SIDE YARD SETBACK: 5.61' VARIABLE SIDE YARD SETBACKS: 7'-6" IF HEIGHT GREATER THAN 15' 10'-0" IF HEIGHT GREATER THAN 25' REAR YARD SETBACK: PER SHORELINE		YES YES YES YES YES YES YES	G101
GROSS FLOOR AREA MICC 19.02.020.D	MAX GFA: 5,000 SF ALLOWED 4,409 SF EXISTING	4,943 SF (13% OF LOT AREA)	YES	G201
BUILDING HEIGHT LIMIT MICC 19.02.020.E	30' MAXIMUM HEIGHT ABOVE AVERAGE BUILDING ELEVATION TO THE HIGHEST POINT OF THE ROOF	ABE: 30' - 4" ABE + 30': 60' - 4" TOP OF BUILDING: 59'-10"	YES	G200 A202
LOT COVERAGE MICC 19.02.020.F	13,099 SF ALLOWED (35% OF LOT AREA) 7,185 SF EXISTING (19%)	8,499 SF (23%)	YES	G200
MAX HARDSCAPE	7,969 SF ALLOWED (9% + 12% UNUSED LOT COVERAGE) 2,976 SF EXISTING (8%)	3,791 SF (10%)	YES	G200
LANDSCAPING	24,327 SF (65%) REQUIRED LANDSCAPING AREA 26,974 SF EXISTING (72%)	24,976 SF (67%)	YES	G200
PARKING MICC 19.02.020.G	3 PARKING SPACES REQUIRED, AT LEAST 2 SHALL BE COVERED	4 PARKING SPACES: 2 ARE COVERED	YES	G101

GENERAL SITE PLAN NOTES

1. REFER TO CRITICAL AREA STUDY, GEOTECHNICAL REPORT AND ARBORIST REPOT FOR WORK WITHIN ASSOCIATED ENVIRONMENTALLY CRITICAL AREAS.
2. REFER TO CIVIL DRAWINGS FOR TESC, TREE, UTILITIES AND GRADING PLANS.
3. REFER TO LANDSCAPE DRAWINGS FOR PROPOSED TREES AND SHRUBS.

SITE PLAN LEGEND

- EXISTING BUILDING TO BE REMOVED
- PROPOSED BUILDING FOOTPRINT
- PROPOSED BUILDING OVERHANG
- PROPOSED CONCRETE DRIVEWAY OR PATHWAY
- WETLAND DELINEATION, REFERENCE CRITICAL AREAS STUDY
- EXISTING TREES, REFERENCE ARBORIST REPORT AND CIVIL TREE PLAN
- DRIPLINE
- RLOD (RECOMMENDED LIMITS OF DISTRUBANCE)
- EXISTING CONTOUR, SHOWN AT 1' INTERVALS, REFERENCE CIVIL DRAWINGS
- PROPOSED CONTOUR, SHOWN AT 1' INTERVALS, REFERENCE CIVIL DRAWINGS
- PROPERTY LINE

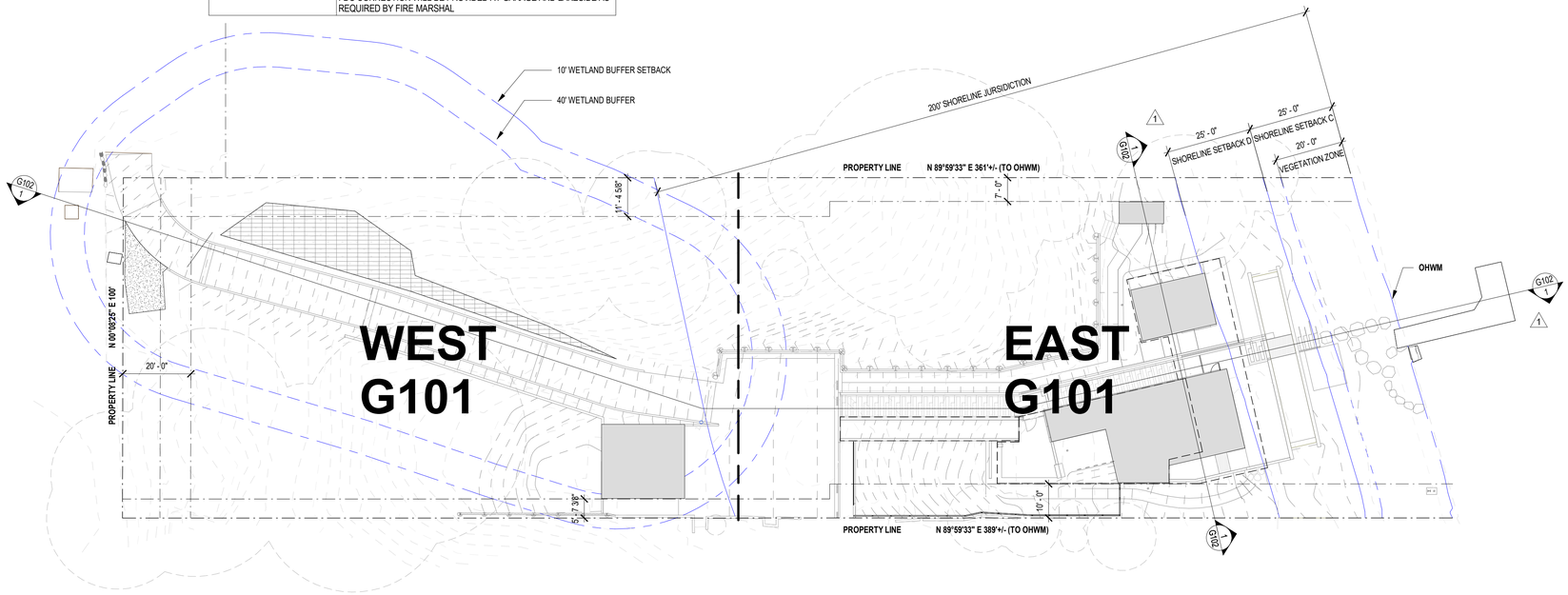

1 G100 **COMPOSITE SITE PLAN**
1" = 20'-0"

0' 10' 20' 40'

MILLER HULL
The Miller Hull Partnership, LLP
Architecture and Planning
Polson Building
71 Columbia, Sixth Floor
Seattle, WA 98104
Phone: 206.682.6837
Contact: Name

STAMP

9309 REGISTERED ARCHITECT BRIAN COLEY STATE OF WASHINGTON

MERCER ISLAND REVIEWED FOR CODE COMPLIANCE March 27, 2023 SITE COPY

MERCER ISLAND HOUSE: CASCADE

6838 96TH AVE SE
MERCER ISLAND, WA 98040

SUBMITTAL

100% CONSTRUCTION DOCUMENTS

FEBRUARY 24, 2023

REVISIONS

No.	Description	Date
1	Building Permit Resubmittal	10/27/22

Drawn: AN
Checked: AN
M|H Proj No.: A20.0085.00
Issue Date: FEBRUARY 24, 2023

SHEET

SITE PLAN
G100

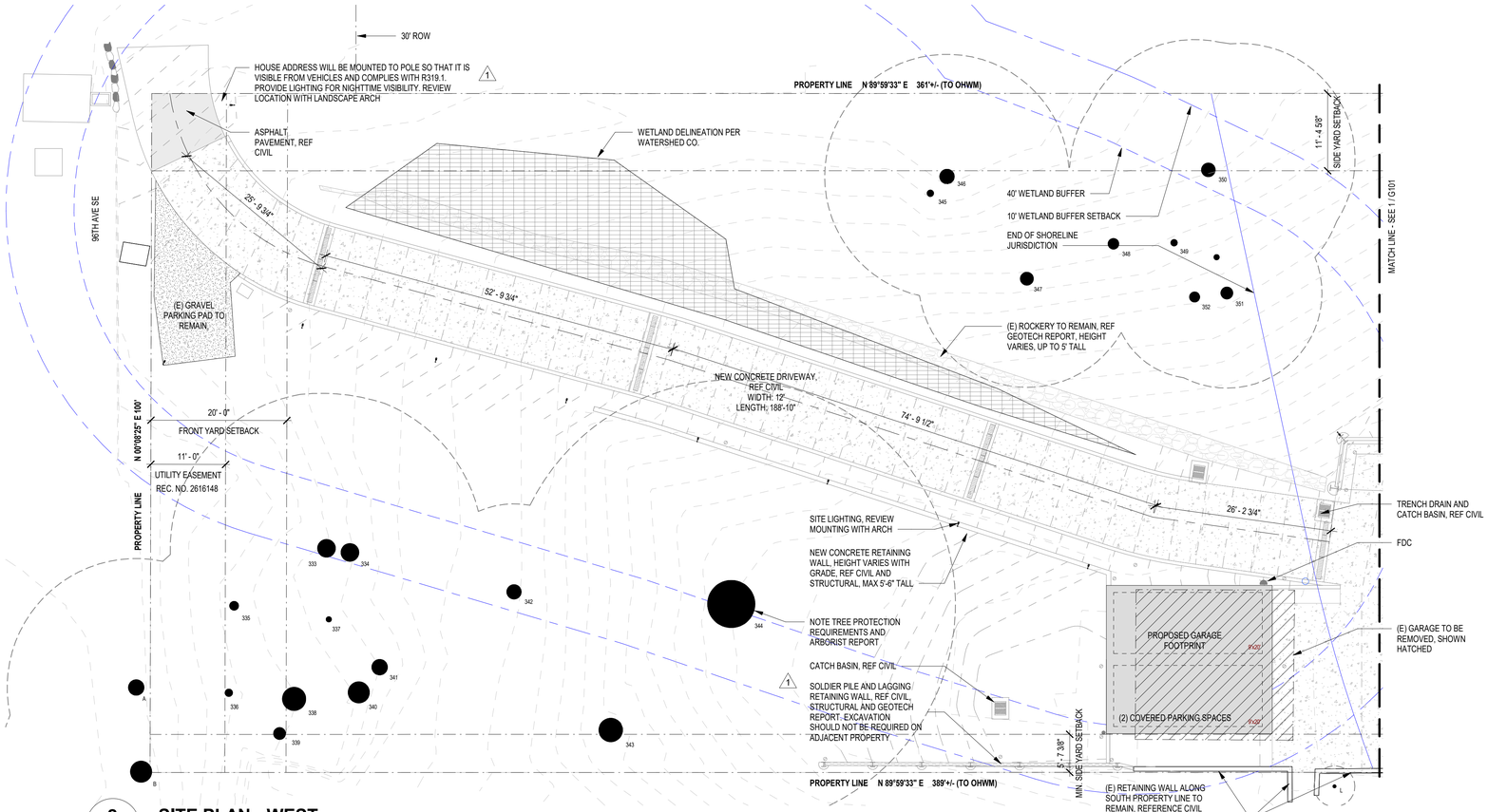

2 G101 **SITE PLAN - WEST**

1" = 10'-0"

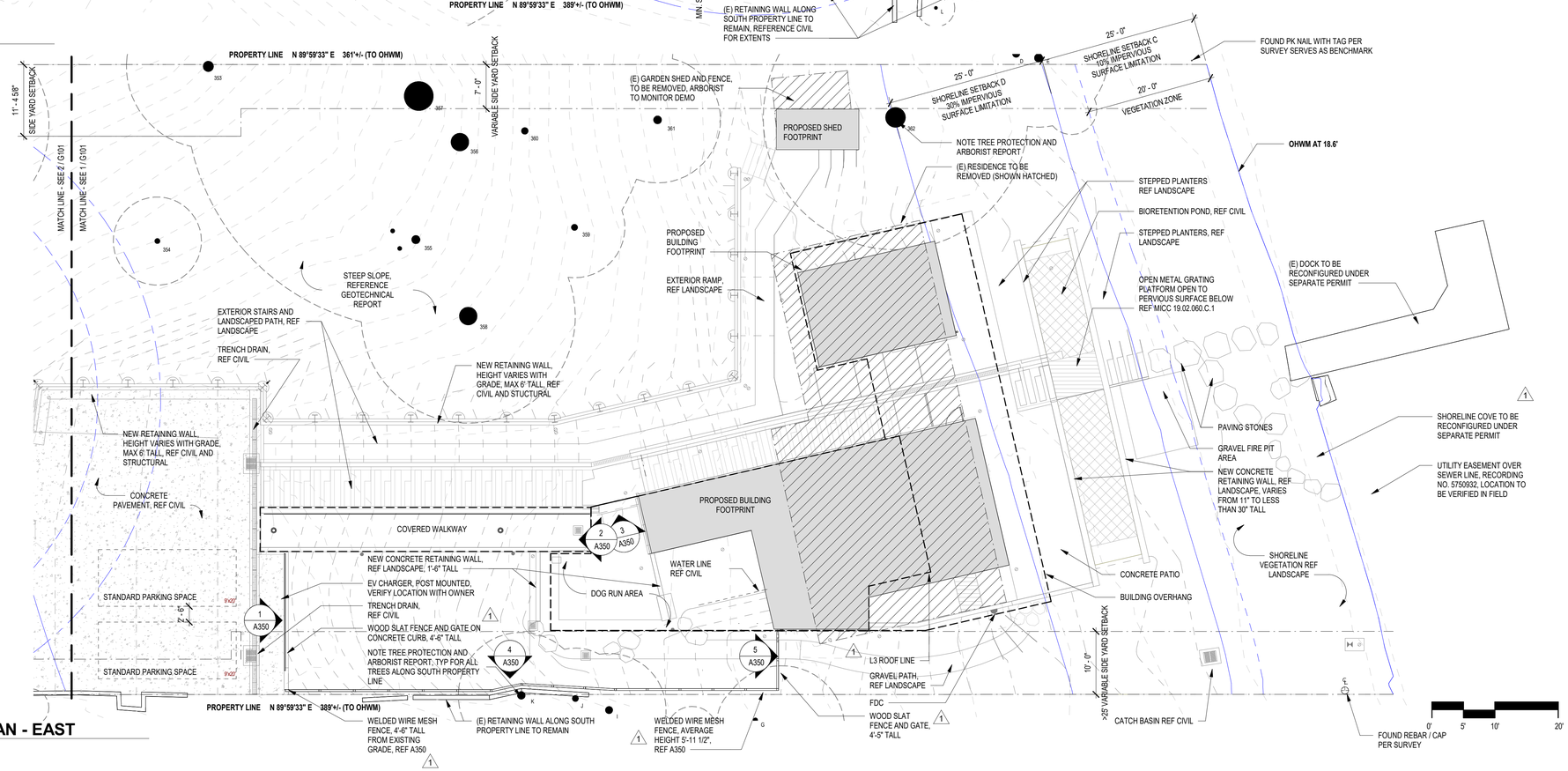

1 G101 **SITE PLAN - EAST**

1" = 10'-0"

GENERAL SITE PLAN NOTES

1. REFER TO CRITICAL AREA STUDY, GEOTECHNICAL REPORT AND ARBORIST REPOT FOR WORK WITHIN ASSOCIATED ENVIRONMENTALLY CRITICAL AREAS.
2. REFER TO CIVIL DRAWINGS FOR TESC, TREE, UTILITIES AND GRADING PLANS.
3. REFER TO LANDSCAPE DRAWINGS FOR PROPOSED TREES AND SHRUBS.

SITE PLAN LEGEND

- EXISTING BUILDING TO BE REMOVED
- PROPOSED BUILDING FOOTPRINT
- PROPOSED BUILDING OVERHANG
- PROPOSED CONCRETE DRIVEWAY OR PATHWAY
- WETLAND DELINEATION, REFERENCE CRITICAL AREAS STUDY
- EXISTING TREES, REFERENCE ARBORIST REPORT AND CIVIL TREE PLAN
  - DRIPLINE
  - RLOD (RECOMMENDED LIMITS OF DISTRUBANCE)
- EXISTING CONTOUR, SHOWN AT 1' INTERVALS, REFERENCE CIVIL DRAWINGS
- PROPOSED CONTOUR, SHOWN AT 1' INTERVALS, REFERENCE CIVIL DRAWINGS
- PROPERTY LINE

MILLER HULL

The Miller Hull Partnership, LLP
Architecture and Planning
Polson Building
71 Columbia, Sixth Floor
Seattle, WA 98104

Phone: 206.682.6837
Contact: Name

STAMP

9309 REGISTERED ARCHITECT BRIAN COLLIN STATE OF WASHINGTON

MERCER ISLAND REVIEWED FOR CODE COMPLIANCE March 27, 2023 SITE COPY

MERCER ISLAND HOUSE: CASCADE

6838 96TH AVE SE
MERCER ISLAND, WA 98040

SUBMITTAL

100% CONSTRUCTION DOCUMENTS

FEBRUARY 24, 2023

REVISIONS

No.	Description	Date
1	Building Permit Resubmittal	10/27/22

Drawn: AN
Checked: AN
M|H Proj No.: A20.0085.00

Issue Date: FEBRUARY 24, 2023

SHEET

SITE PLAN
G101

2 G102 SITE SECTION - NORTH / SOUTH

1" = 20'-0"

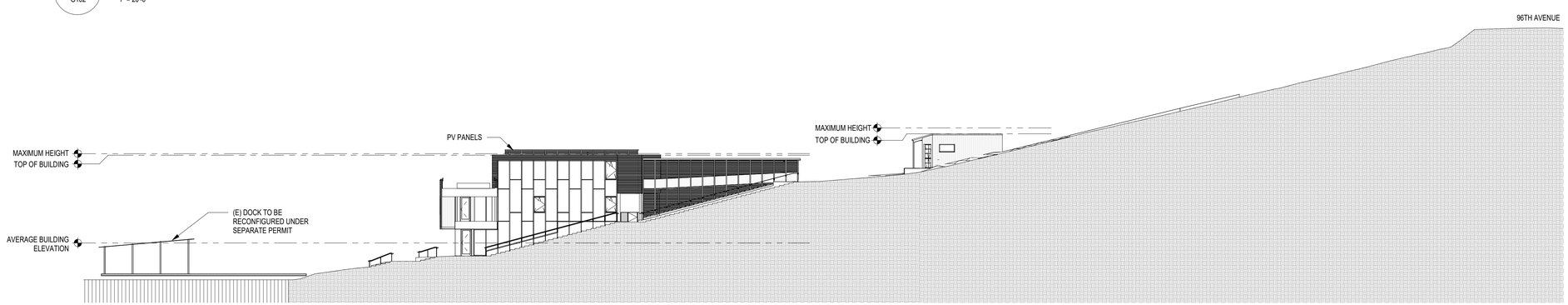

1 G102 SITE SECTION - EAST / WEST

1" = 20'-0"

MILLER HULL

The Miller Hull Partnership, LLP
Architecture and Planning
Polson Building
71 Columbia, Sixth Floor
Seattle, WA 98104

Phone: 206.682.6837
Contact: Name

STAMP

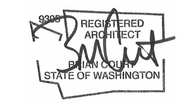

MERCER ISLAND HOUSE: CASCADE

6838 96TH AVE SE
MERCER ISLAND, WA 98040

SUBMITTAL

100% CONSTRUCTION DOCUMENTS

FEBRUARY 24, 2023

REVISIONS

No.	Description	Date
1	Building Permit Resubmittal	10/27/22

Drawn: Author
Checked: Checker
M|H Proj No.: A20.0085.00

Issue Date: FEBRUARY 24, 2023

SHEET

1

SITE SECTIONS
G102

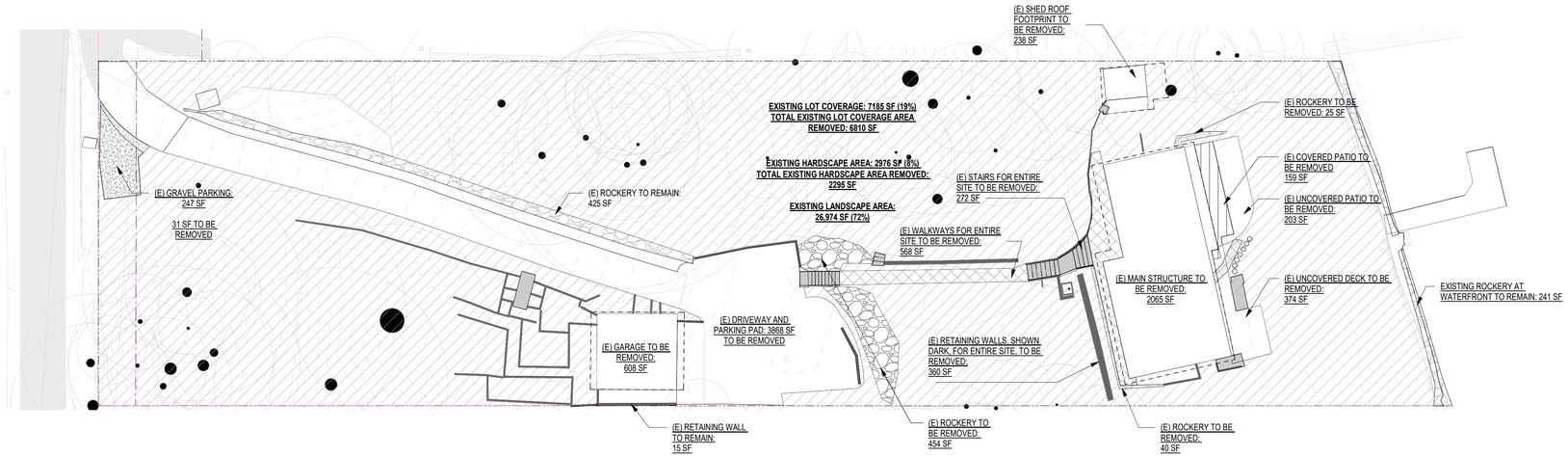

3 G200 **SITE PLAN DIAGRAM - EXISTING SITE**

1" = 20'-0"

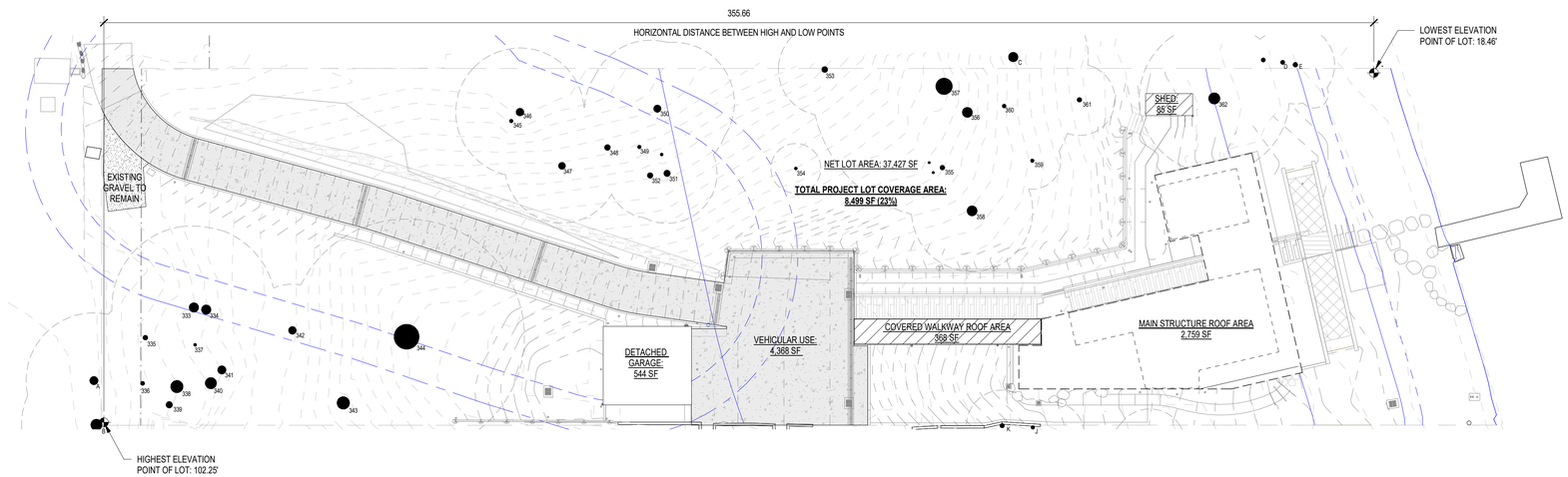

2 G200 **SITE PLAN DIAGRAM - LOT COVERAGE CALCULATIONS**

1" = 20'-0"

NOTE: IN ACCORDANCE WITH MICC 19.02.020(F)(3)(D) ALL JAPANESE KNOTWEED (POLYGONUM CUSPIDATUM) AND REGULATED CLASS A, REGULATED CLASS B, AND REGULATED CLASS C WEEDS IDENTIFIED ON THE KING COUNTY NOXIOUS WEED LIST, AS AMENDED, SHALL BE REMOVED FROM THE PROPERTY. PROVIDED, THAT REMOVAL SHALL NOT BE REQUIRED IF THE REMOVAL WILL RESULT IN INCREASED SLOPE INSTABILITY OR RISK OF LANDSLIDE OR EROSION.

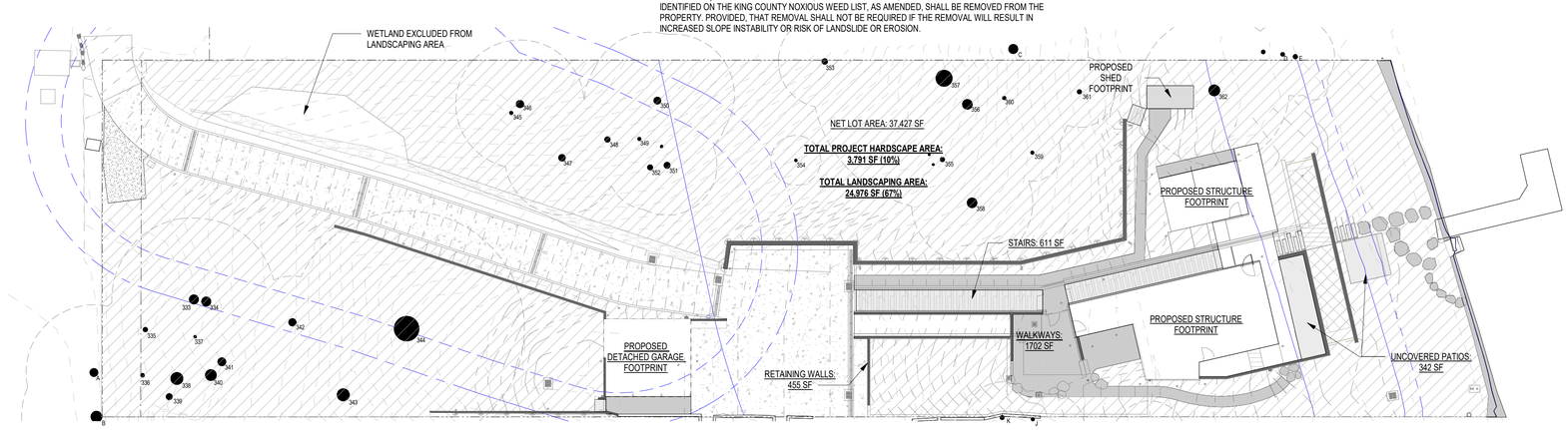

1 G200 **SITE PLAN DIAGRAM - LANDSCAPE / HARDSCAPE CALCULATIONS**

1" = 20'-0"

LOT COVERAGE CALCULATIONS

GROSS LOT AREA		37,427	SQUARE FEET
NET LOT AREA		37,427	SQUARE FEET
ALLOWED LOT COVERAGE AREA		**13,099**	**SQUARE FEET**
ALLOWED LOT COVERAGE		**35**	**% OF LOT**
EXISTING LOT COVERAGE			
	MAIN STRUCTURE ROOF AREA	2,065	SQUARE FEET
	ACCESSORY BUILDING ROOF AREA	846	SQUARE FEET
	VEHICULAR USE	4,115	SQUARE FEET
	COVERED PATIOS AND DECK	159	SQUARE FEET
	TOTAL EXISTING LOT COVERAGE AREA	**7,185**	**SQUARE FEET**
EXISTING LOT COVERAGE AREA REMOVED			
	MAIN STRUCTURE ROOF AREA	2,065	SQUARE FEET
	ACCESSORY BUILDING ROOF AREA	846	SQUARE FEET
	VEHICULAR USE (DRIVEWAY, PARKING PAD AND PORTION OF GRAVEL PARKING)	3899	SQUARE FEET
	TOTAL EXISTING LOT COVERAGE AREA TO BE REMOVED	**6,810**	**SQUARE FEET**
PROPOSED ADJUSTMENT FOR SINGLE STORY AREA		0	
PROPOSED ADJUSTMENT FOR FLAG LOT		0	
PROPOSED NEW LOT COVERAGE			
	MAIN STRUCTURE ROOF AREA	2,759	SQUARE FEET
	GARAGE ROOF AREA	544	SQUARE FEET
	SHED ROOF AREA	85	SQUARE FEET
	COVERED WALKWAY ROOF AREA	368	SQUARE FEET
	VEHICULAR USE	4,368	SQUARE FEET
	TOTAL PROPOSED LOT COVERAGE	**8,124**	**SQUARE FEET**
TOTAL PROJECT LOT COVERAGE		**8,499**	SQUARE FEET
PROPOSED LOT COVERAGE		**23%**	

HARDSCAPE CALCULATIONS

GROSS LOT AREA		37,427	SQUARE FEET
NET LOT AREA		37,427	SQUARE FEET
AREA BORROWED FROM LOT COVERAGE			
	35% ALLOWED - 23% PROPOSED = 12%	4,601	SQUARE FEET
ALLOWED HARDSCAPE AREA			
	9% OF LOT AREA + 12%	**21%**	**OF LOT**
	ALLOWED HARDSCAPE AREA	**7,969**	
EXISTING HARDSCAPE AREA			
	UNCOVERED DECKS	374	SQUARE FEET
	UNCOVERED PATIOS	203	SQUARE FEET
	WALKWAYS	568	SQUARE FEET
	STAIRS	272	SQUARE FEET
	ROCKERIES AND RETAINING WALLS	1,560	SQUARE FEET
	TOTAL EXISTING HARDSCAPE AREA	**2,976**	**SQUARE FEET**
	TOTAL HARDSCAPE AREA REMOVED	**2,295**	**SQUARE FEET**
PROPOSED NEW HARDSCAPE AREA			
	UNCOVERED DECKS		SQUARE FEET
	UNCOVERED PATIOS	342	SQUARE FEET
	WALKWAYS	1,702	SQUARE FEET
	STAIRS	611	
	ROCKERIES AND RETAINING WALLS	455	
	TOTAL PROPOSED NEW HARDSCAPE AREA	**3,110**	**SQUARE FEET**
TOTAL PROJECT HARDSCAPE AREA		**3,791**	
PROPOSED HARDSCAPE AREA		**10%**	

0' 10' 20' 40'

MILLER HULL

The Miller Hull Partnership, LLP
Architecture and Planning
Polson Building
71 Columbia, Sixth Floor
Seattle, WA 98104

Phone: 206.682.6837
Contact: Name

STAMP

9309 REGISTERED ARCHITECT BRIAN COLEY STATE OF WASHINGTON

MERCER ISLAND REVIEWED FOR CODE COMPLIANCE March 27, 2023 SITE COPY

MERCER ISLAND HOUSE: CASCADE

6838 96TH AVE SE
MERCER ISLAND, WA 98040

SUBMITTAL

100% CONSTRUCTION DOCUMENTS

FEBRUARY 24, 2023

REVISIONS

No.	Description	Date
1	Building Permit Resubmittal	10/27/22

Drawn: AN
Checked: AN
M|H Proj No.: A20.0085.00

Issue Date: FEBRUARY 24, 2023

SHEET

1

CODE DIAGRAMS
G200

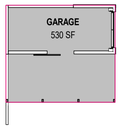

5 GARAGE AREA PLAN
G201 1/16" = 1'-0"

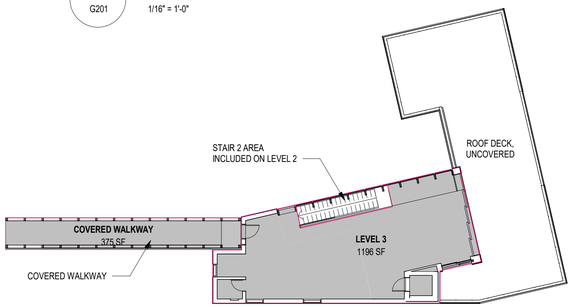

4 LEVEL 3 AREA PLAN
G201 1/16" = 1'-0"

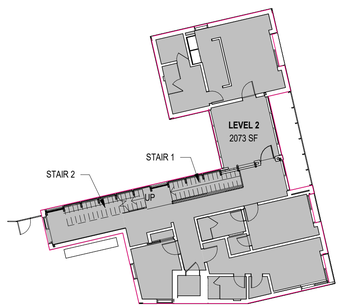

3 LEVEL 2 AREA PLAN
G201 1/16" = 1'-0"

AREA SCHEDULE (GSF)	
Name	Area
LEVEL 1 / OFFICE	339 SF
LEVEL 1	855 SF
SHED	85 SF
LEVEL 2	2073 SF
LEVEL 3	1196 SF
COVERED WALKWAY	375 SF
GARAGE	530 SF

5453 SF - 510 SF = **4943 SF**

1 1

BASEMENT FLOOR AREA EXCLUSION:
43% OR 510 SF EXCLUDED, REF CHART BELOW AND ELEVATIONS
LEVEL 1 (BASEMENT) GFA: 1194 SF - 510 SF = 684 GFA

BASEMENT FLOOR AREA CALCULATION			
WALL	LENGTH x	COVERAGE	RESULT
A	25.07	72%	18%
B	14.73	35%	5%
C	4.56	0%	0%
D	22.93	0%	0%
E	23.93	0%	0%
F	38.33	18%	7%
G	15.17	43%	7%
H	22.33	10%	2%
I	15.17	0%	0%
J	22.33	17%	4%
TOTALS	**204.35**	NA	43%

AREA PLAN NOTES:
- GROSS SQUARE FOOTAGE INCLUDES FLOOR AREA BOUNDED BY THE EXTERIOR FACES OF THE BUILDING

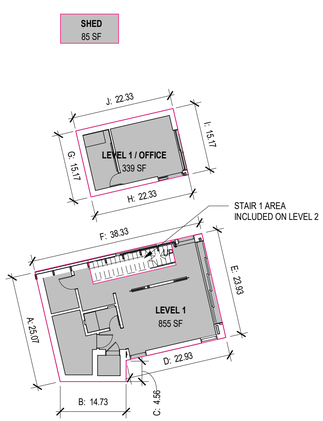

2 LEVEL 1 AREA PLAN
G201 1/16" = 1'-0"

0' 8' 16' 32'

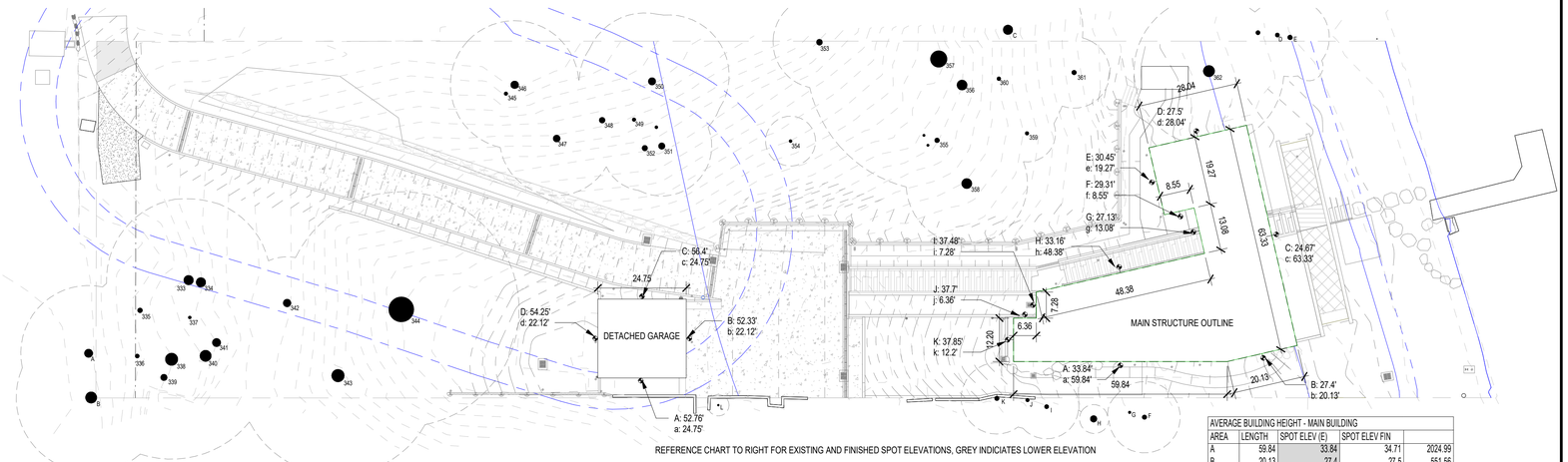

REFERENCE CHART TO RIGHT FOR EXISTING AND FINISHED SPOT ELEVATIONS, GREY INDICIATES LOWER ELEVATION

$$\frac{(A \times a) + (B \times b) + (C \times c) + (D \times d) + (E \times e) + (F \times f) + (G \times g) + (H \times h) + (I \times i) + (K \times k)}{(a + b + c + d + e + f + g + h + i + k)}$$

$$\frac{(33.84' \times 59.84') + (27.4' \times 20.13') + (24.67' \times 63.33') + (27.5' \times 28.04') + (30.45' \times 19.27') + (29.31' \times 8.55') + (27.13' \times 13.08') + (33.16' \times 48.38') + (37.48' \times 7.28') + (37.7' \times 6.36') + (37.85' \times 12.2')}{(59.84' + 20.13' + 63.33' + 28.04' + 19.27' + 8.55' + 13.08' + 48.38' + 7.28' + 6.36' + 12.2')}$$

$$\frac{8680.91}{286.46} = \textbf{30.30' AVERAGE BUILDING ELEVATION @ MAIN BUILDING}$$

AVERAGE BUILDING HEIGHT - MAIN BUILDING				
AREA	LENGTH	SPOT ELEV (E)	SPOT ELEV FIN	
A	59.84	33.84	34.71	2024.99
B	20.13	27.4	27.5	551.56
C	63.33	24.67	25.79	1562.35
D	28.04	27.5	27.68	771.10
E	19.27	30.82	30.45	586.77
F	8.55	31.5	29.31	250.60
G	13.08	31.5	27.13	354.86
H	48.38	33.78	33.16	1604.28
I	7.28	38.34	37.48	272.85
J	6.36	38.34	37.7	239.77
K	12.2	39.15	37.85	461.77
	286.46			**8680.91**
				30.30

$$\frac{(A \times a) + (B \times b) + (C \times c) + (D \times d)}{(a + b + c + d)}$$

$$\frac{(52.76' \times 24.75') + (52.33' \times 22.12') + (56.4' \times 24.75') + (54.25' \times 22.12')}{(24.75' + 22.12' + 24.75' + 22.12')}$$

$$\frac{5059.26}{93.74} = \textbf{53.97' AVERAGE BUILDING ELEVATION @ GARAGE}$$

AVERAGE BUILDING HEIGHT - GARAGE				
AREA	LENGTH	SPOT ELEV (E)	SPOT ELEV FIN	
A	24.75	52.76	54.13	1305.81
B	22.12	52.33	53.98	1157.54
C	24.75	56.4	58.72	1395.90
D	22.12	55.6	54.25	1200.01
	93.74			**5059.26**
				53.97

1 SITE PLAN DIAGRAM - AVERAGE BUILDING HEIGHT CALCULATIONS
G201 1" = 20'-0"

0' 10' 20' 40'

MILLER HULL

The Miller Hull Partnership, LLP
Architecture and Planning
Polson Building
71 Columbia, Sixth Floor
Seattle, WA 98104

Phone: 206.682.6837
Contact: Name

STAMP

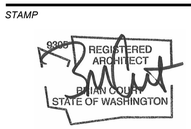

MERCER ISLAND HOUSE: CASCADE

6838 96TH AVE SE
MERCER ISLAND, WA 98040

SUBMITTAL

100% CONSTRUCTION DOCUMENTS

FEBRUARY 24, 2023

REVISIONS

No.	Description	Date
1	Building Permit Resubmittal	10/27/22

Drawn: AN
Checked: AN
M|H Proj No.: A20.0085.00

Issue Date: FEBRUARY 24, 2023

SHEET

CODE DIAGRAMS
G201

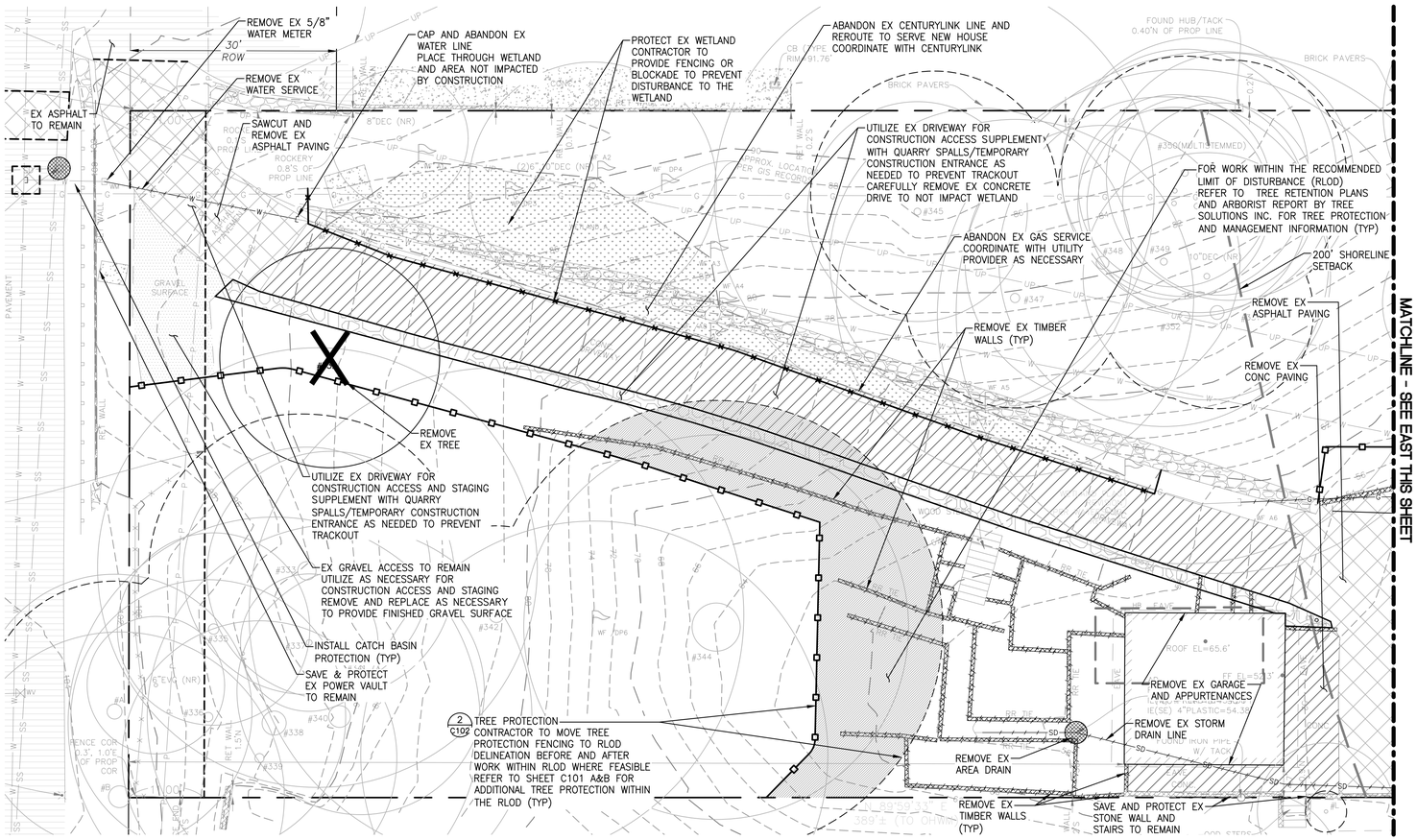

TESC NOTES

1. CONTRACTOR TO VIDEO INVESTIGATE EX SD DRAIN AND EX SS LINE TO VERIFY CONDITION, LOCATION AND INVERT ELEVATION. CONTRACTOR TO PROVIDE VIDEO TO ENGINEER FOR REVIEW OF EXISTING CONDITION PRIOR TO CONSTRUCTION.
2. PROVIDE SEDIMENT TANK AS NECESSARY FOR STORMWATER SEDIMENT CONTROL PRIOR TO DISCHARGE FROM THE SITE.
3. CONTRACTOR TO PROVIDE CONSTRUCTION FENCING AS NECESSARY TO SECURE MATERIALS, EQUIPMENT AND ALL AREAS BEING DISTURBED.

ADDITIONAL NOTES

1. REFER TO ARCHITECT PLANS FOR LOT COVERAGE AND HARDSCAPE CALCULATIONS AT SHORELINE SETBACKS
2. REFER TO ARCHITECT PLANS FOR LOT COVERAGE AND HARDSCAPE CALCULATIONS AT THE SITE PROPERTY
3. REFER TO TREE RETENTION PLANS AND ARBORIST REPORT BY TREE SOLUTIONS INC. FOR TREE PROTECTION AND MANAGEMENT INFORMATION.
4. EXISTING WETLAND SHALL NOT BE DISTURBED FOR ANY REASON. REFER TO WETLAND AND SHORELINE MITIGATION PLAN FOR LIMITS OF PROJECT IMPACTS.
5. THE PROJECT INCLUDES REPLACEMENT OF EXISTING TIMBER RETAINING WALLS WITH NEW CAST-IN-PLACE CANTILEVERED CONCRETE WALLS AND/OR CANTILEVERED SOLDIER PILE AND LAGGING WALLS. IN SOME CASES, THE EXISTING RETAINING WALLS ARE SUPPORTING SLOPES THAT MAY BECOME UNSTABLE IF THE EXISTING WALLS ARE REMOVED WITHOUT MAINTAINING CONTINUOUS LATERAL SUPPORT THROUGHOUT CONSTRUCTION. THE CONTRACTOR IS FULLY RESPONSIBLE FOR SITE SAFETY, INCLUDING THE STABILITY OF TEMPORARY EXCAVATIONS AND SLOPES. THE CONTRACTOR IS SOLELY RESPONSIBLE FOR THE MEANS, METHODS, TECHNIQUES, SEQUENCES, AND OPERATIONS OF CONSTRUCTION OPERATIONS. SLOPE HEIGHTS, INCLINATIONS, AND EXCAVATION DEPTHS SHOULD IN NO CASE EXCEED THOSE SPECIFIED IN LOCAL, STATE, OR FEDERAL SAFETY REGULATIONS. THE FOLLOWING ARE GEOTECHNICAL RECOMMENDATIONS TO REDUCE THE POTENTIAL FOR SLOPE INSTABILITY DURING CONSTRUCTION:
   a. PROPOSED SOLDIER PILE WALL ALIGNMENTS SHOULD BE LOCATED, TO THE MAXIMUM EXTENT PRACTICAL, IMMEDIATELY UPSLOPE OF THE EXISTING TIMBER WALL ALIGNMENTS TO ALLOW FOR DRILLING OF SHAFTS AND PLACEMENT OF STEEL PRIOR TO DEMOLITION OF THE EXISTING TIMBER WALLS. EXCAVATION IN FRONT OF THE PROPOSED SOLDIER PILE WALLS AND LAGGING INSTALLATION SHOULD TAKE PLACE FROM THE TOP DOWN, CONCURRENT WITH PIECE-WISE DEMOLITION OF THE EXISTING TIMBER WALL ELEMENTS SUCH THAT LATERAL SUPPORT OF THE SLOPE IS MAINTAINED AT ALL TIMES.
   b. ALTERNATIVELY, SOLDIER PILE WALLS CAN BE LOCATED DIRECTLY IN FRONT OF THE EXISTING WALLS, AND THE EXISTING WALLS CAN BE LEFT IN-PLACE DURING BACKFILL PLACEMENT.
   c. WALL DEMOLITION AND CONSTRUCTION SHOULD TAKE PLACE DURING THE DRY SEASON (APRIL THROUGH SEPTEMBER) WHEN PRECIPITATION AND GROUNDWATER ARE TYPICALLY AT A MINIMUM AND THERE IS A REDUCED RISK OF SATURATION OF THE SITE SOILS AND ASSOCIATED SLOPE INSTABILITY.
   d. IT MAY BECOME NECESSARY FOR THE CONTRACTOR TO UTILIZE TEMPORARY SHORING SYSTEMS TO PROVIDE TEMPORARY SUPPORT OF SLOPES. THE CONTRACTOR IS RESPONSIBLE FOR THE DESIGN AND SUCCESSFUL INSTALLATION OF TEMPORARY SHORING SYSTEMS. TEMPORARY SHORING SYSTEMS SHOULD BE DESIGNED AND CONSTRUCTED TO SUPPORT LATERAL LOADS EXERTED BY THE RETAINED SOIL MASS AND ANY PRESSURES APPLIED DURING CONSTRUCTION, SUCH AS HEAVY EQUIPMENT AND STOCKPILES NEXT TO THE EXCAVATION.

811 Know what's **below.** **Call** before you dig. Dial 811

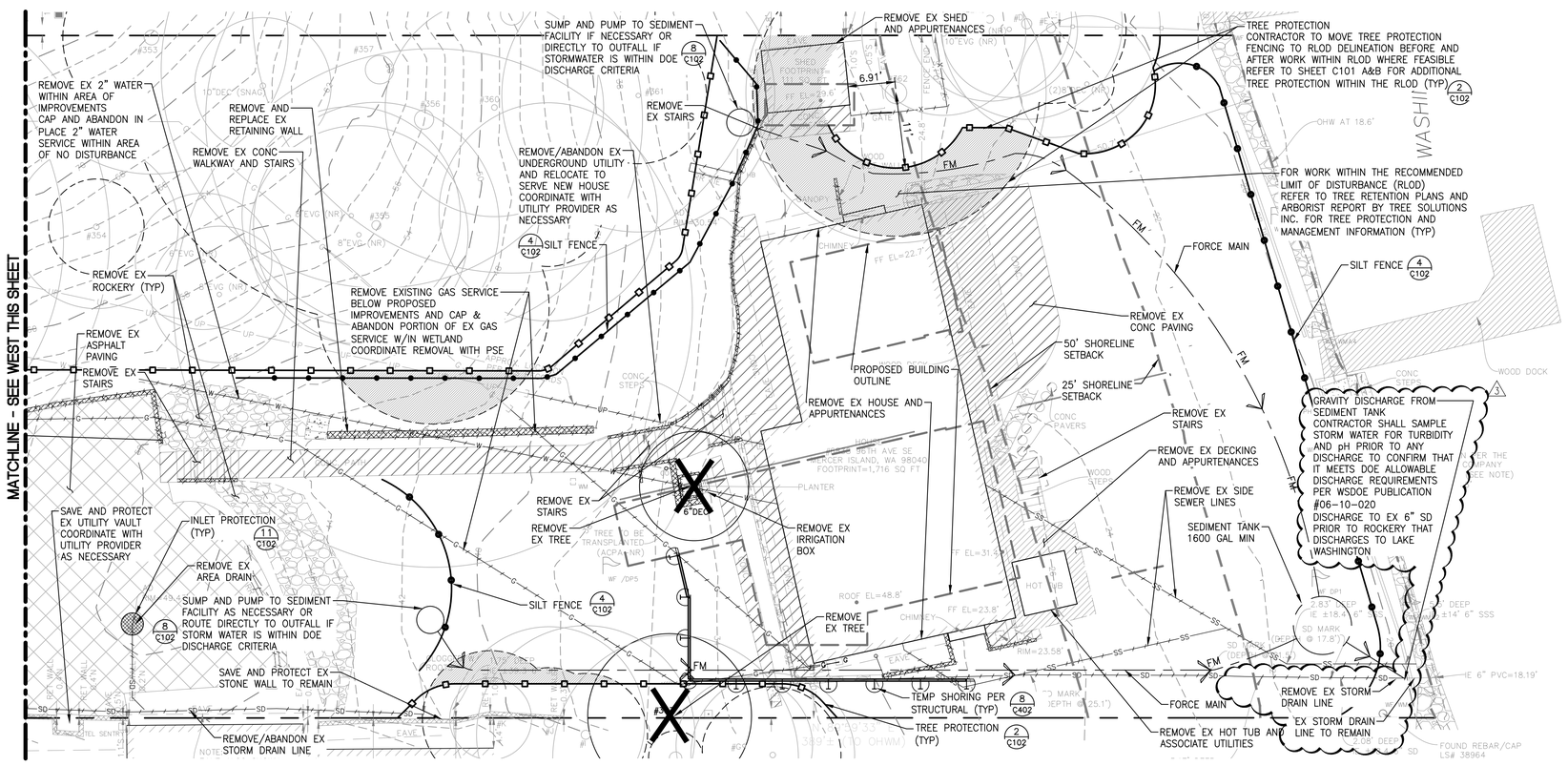

N

Scale 1"=10'

LEGEND

- PROPERTY LINE
- EX CONTOUR (INDEX)
- EX CONTOUR
- EX BUILDING
- SAWCUT LINE
- ASPHALT REMOVAL
- CONCRETE REMOVAL
- STABILIZED CONSTRUCTION ENTRANCE
- SILT FENCE
- WETLAND PROTECTION
- WORK WITHIN THE RECOMMENDED LIMIT OF DISTURBANCE (RLOD) SEE TREE RETENTION PLAN
- EX TREE TO REMAIN
- EX TREE TO BE REMOVED
- TREE PROTECTION
- CATCH BASIN INSERT PROTECTION
- WETLAND BUFFER DELINEATION
- REMOVE EX TIMBER WALL

MILLER HULL
The Miller Hull Partnership, LLP
Architecture and Planning
Polson Building
71 Columbia, Sixth Floor
Seattle, WA 98104
Phone: 206.682.6837
Contact: Name

LPD engineering pllc
1932 First Ave
Suite 201
Seattle, WA 98101
p. 206.725.1211
f. 206.973.5344
www.lpdengineering.com

STAMP

LAURIE J. PEARL — STATE OF WASHINGTON — 30798 — REGISTERED PROFESSIONAL ENGINEER
2-22-2023

MERCER ISLAND — REVIEWED FOR CODE COMPLIANCE — March 27, 2023 — SITE COPY

MERCER ISLAND HOUSE: CASCADE

6838 96TH AVE SE
MERCER ISLAND, WA 98040

SUBMITTAL

100% CONSTRUCTION DOCUMENTS

FEBRUARY 24, 2023

REVISIONS

No.	Description	Date
1	BUILDING PERMIT RESUBMITTAL	10/27/22
2	BUILDING PERMIT RESUBMITTAL 2	01/06/22
3	BUILDING PERMIT RESUBMITTAL 3	02/24/23

Drawn: EVW
Checked: ACW
M|H Proj No.: A20.0085.00
Issue Date: FEBRUARY 24, 2023

SHEET

TESC AND DEMOLITION PLAN

C100

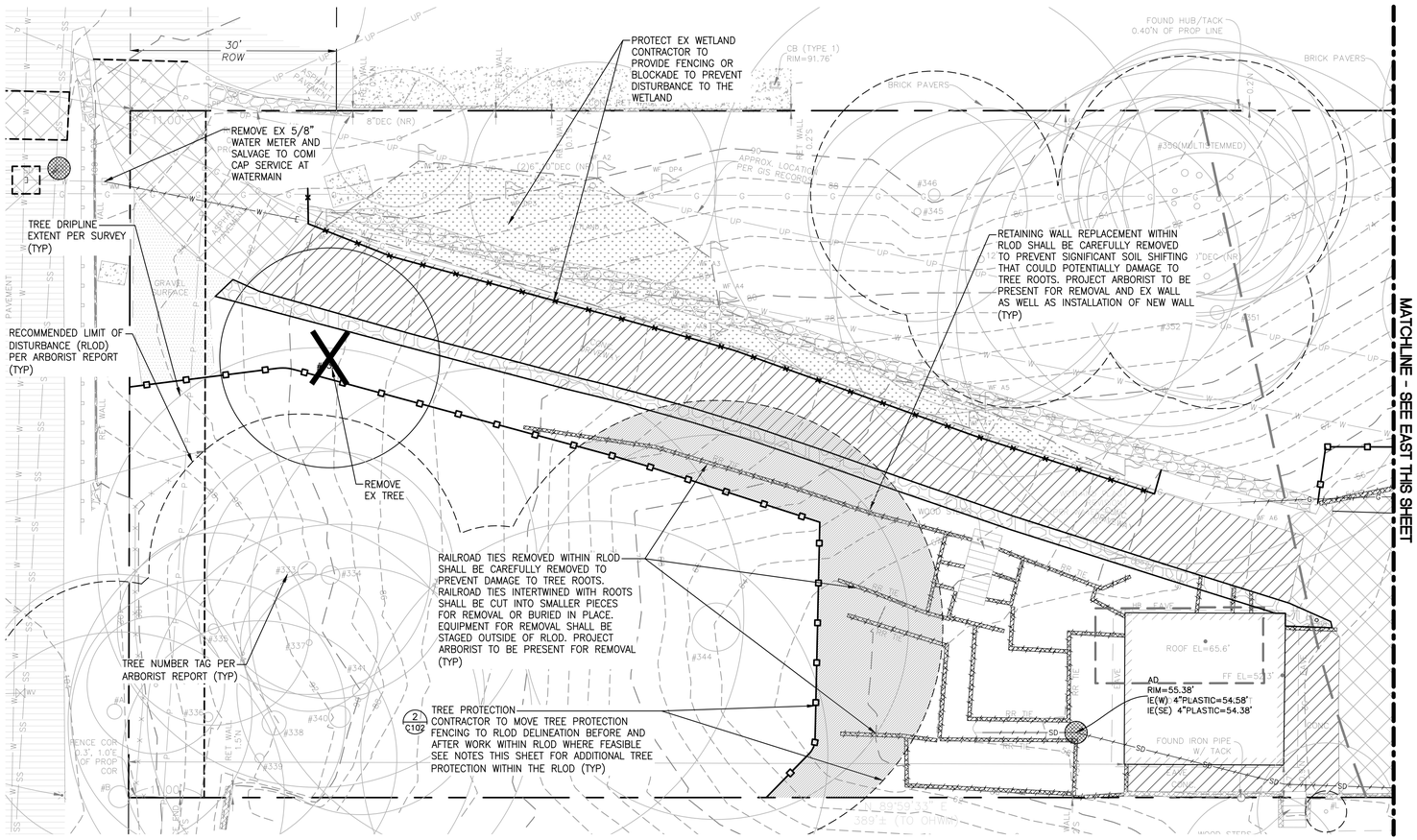

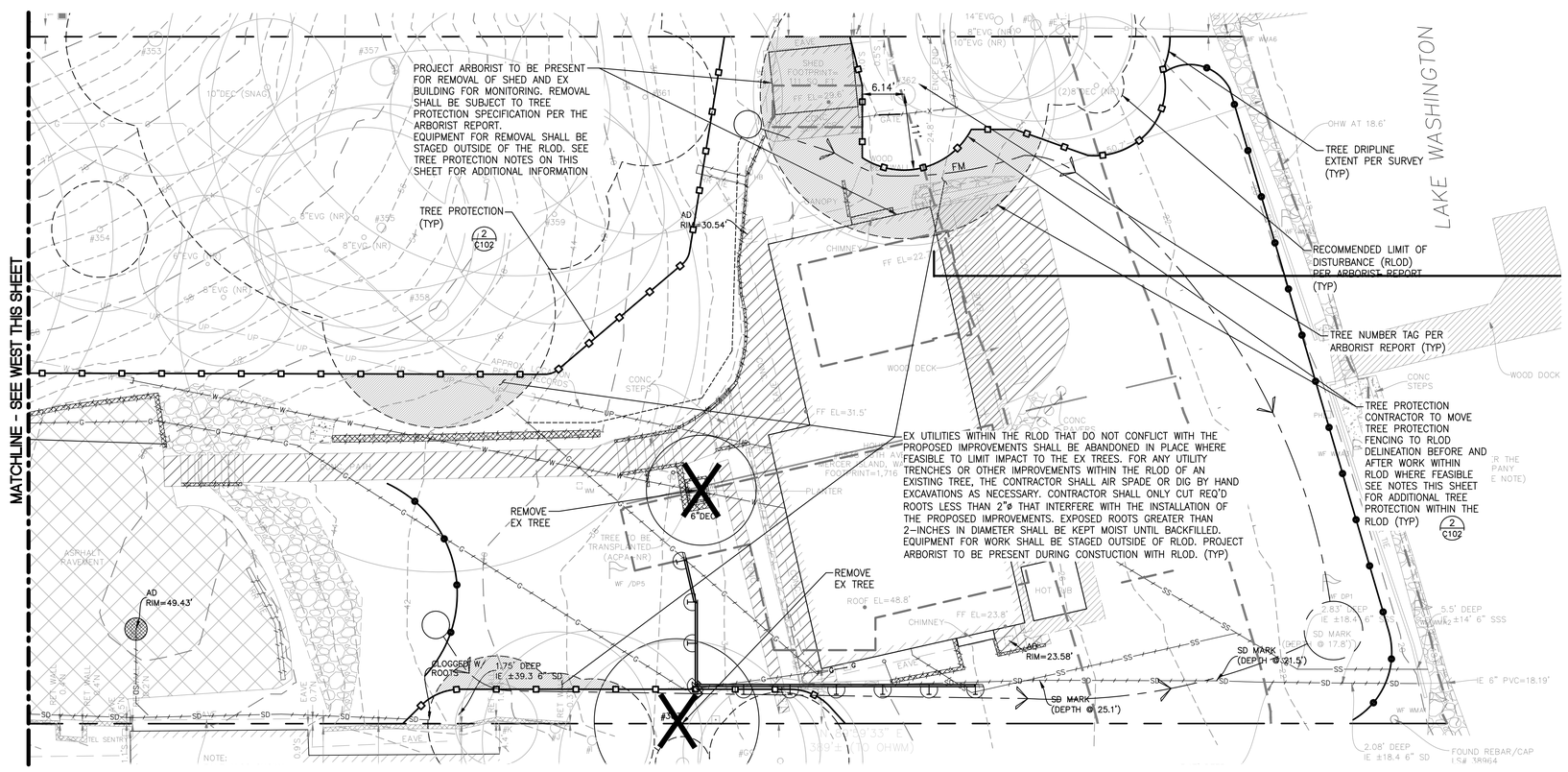

TREE PROTECTION MEASURES AND SPECIAL INSTRUCTIONS AROUND RETAINED TREES

1. REFER TO ARBORIST REPORT BY TREE SOLUTIONS INC. FOR TREE PROTECTION AND MANAGEMENT INFORMATION.
2. ANY WORK, ACTIVITY OR SOIL DISTURBANCE WITHIN THE PROTECTION FENCING, OR LIMIT OF DISTURBANCE, SHALL BE REVIEWED, APPROVED AND MONITORED BY THE PROJECT ARBORIST.
3. PRIOR TO ANY SITE WORK OR DEMOLITION, TREE PROTECTION FENCING (TPF) SHALL BE ERECTED AROUND RETAINED TREES AS SHOWN. TPF SHALL BE SIX (6) FOOT TEMPORARY CHAIN-LINK FENCE AND SHALL BE INSTALLED COMPLETELY ENCIRCLING THE RETAINED TREES.
4. A CITY PLANNER MUST APPROVE ANY MODIFICATIONS TO THE FENCING MATERIAL AND LOCATION.
5. THE AREA PROTECTED BY THE TPF IS OFF LIMITS TO ALL CONSTRUCTION RELATED ACTIVITY.
6. FENCING SHALL NOT BE MOVED OR REMOVED UNLESS APPROVED BY A CITY PLANNER.
7. NO STOCKPILING OF MATERIALS, VEHICULAR OR PEDESTRIAN TRAFFIC, MATERIAL STORAGE OR USE OF EQUIPMENT OR MACHINERY SHALL BE ALLOWED WITHIN RECOMMENDED LIMIT OF DISTURBANCE (RLOD) TO THE EXTENT FEASIBLE. SOIL PROTECTION IS REQUIRED FOR CONSTRUCTION DISTURBANCE WITHIN THE RLOD. THIS INCLUDES BUT IS NOT LIMITED TO 6-INCHES OF WOOD CHIPS COVERED WITH ¾" PLYWOOD OR COMPOSITE MATS.
8. ALL GROUNDWORK WITHIN RLOD SHALL BE MONITORED BY PROJECT ARBORIST TO ASSESS ROOT IMPACTS AND GUIDE ROOT CUTTING AS NECESSARY. FOR ANY UTILITY TRENCHES OR OTHER IMPROVEMENTS WITHIN THE RLOD OF AN EXISTING TREE, THE CONTRACTOR SHALL AIR SPADE OR DIG BY HAND EXCAVATIONS. CONTRACTOR SHALL ONLY CUT REQ'D ROOTS LESS THAN 2"ø THAT INTERFERE WITH THE INSTALLATION OF THE PROPOSED IMPROVEMENTS. EXPOSED ROOTS GREATER THAN 2-INCHES IN DIAMETER SHALL BE KEPT MOIST UNTIL BACKFILLED.
9. BRANCH PRUNING SHALL BE PERFORMED, BY AN APPROVED ISA CERTIFIED ARBORIST, WHERE LIMBS OVERHANG THE TPF TO REDUCE INJURY FROM EQUIPMENT. SEE ARBORIST REPORT FOR SPECIFIC TREE PRUNING RECOMMENDATIONS.

811 Know what's **below**. **Call** before you dig. Dial 811

N

10 0 5 10 20

Scale 1"=10'

LEGEND

- PROPERTY LINE
- EX CONTOUR (INDEX)
- EX CONTOUR
- EX BUILDING
- SAWCUT LINE
- ASPHALT REMOVAL
- CONCRETE REMOVAL
- STABILIZED CONSTRUCTION ENTRANCE
- SILT FENCE
- WETLAND PROTECTION
- WORK WITHIN THE RECOMMENDED LIMIT OF DISTURBANCE (RLOD) SEE TREE RETENTION PLAN
- EX TREE TO REMAIN
- EX TREE TO BE REMOVED
- TREE PROTECTION
- CATCH BASIN INSERT PROTECTION
- WETLAND BUFFER DELINEATION
- REMOVE EX TIMBER WALL

MILLER HULL
The Miller Hull Partnership, LLP
Architecture and Planning
Polson Building
71 Columbia, Sixth Floor
Seattle, WA 98104

Phone: 206.682.6837
Contact: Name

LPD engineering pllc
1932 First Ave
Suite 201
Seattle, WA 98101
p. 206.725.1211
f. 206.973.5344
www.lpdengineering.com

STAMP

LAURIE J. PEARL STATE OF WASHINGTON 30767 REGISTERED PROFESSIONAL ENGINEER
2-22-2023

MERCER ISLAND REVIEWED FOR CODE COMPLIANCE March 27, 2023 SITE COPY

MERCER ISLAND HOUSE: CASCADE

6838 96TH AVE SE
MERCER ISLAND, WA 98040

SUBMITTAL

100% CONSTRUCTION DOCUMENTS

FEBRUARY 24, 2023

REVISIONS

No.	Description	Date
1	BUILDING PERMIT RESUBMITTAL	10/27/22
2	BUILDING PERMIT RESUBMITTAL 2	01/06/22
3	BUILDING PERMIT RESUBMITTAL 3	02/24/23

Drawn: EVW
Checked: ACW
M|H Proj No.: A20.0085.00
Issue Date: FEBRUARY 24, 2023

SHEET

TREE RETENTION PLAN A- REMOVAL

C101A

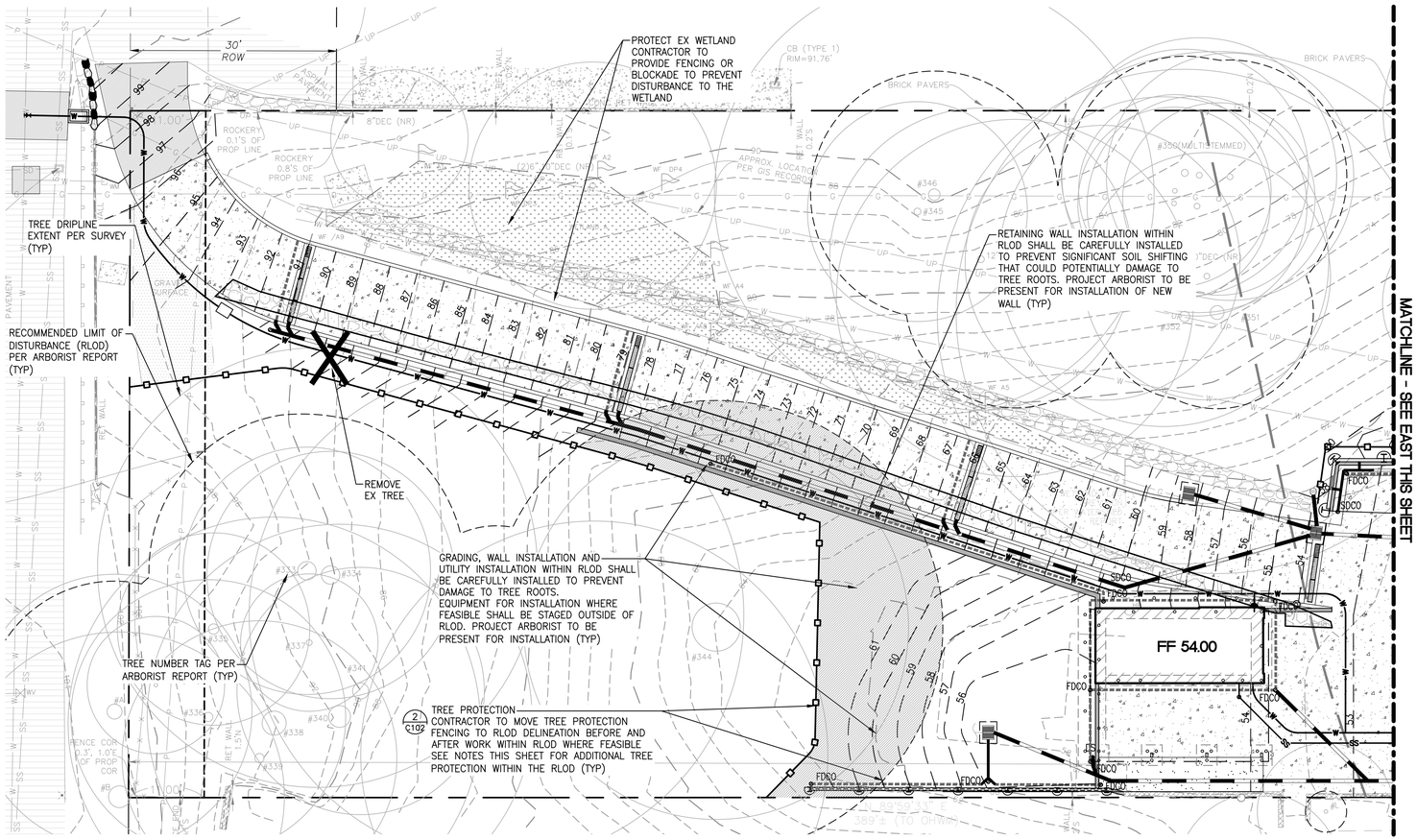

LEGEND

- PROPERTY LINE
- EX CONTOUR (INDEX)
- EX CONTOUR
- PROPOSED CONTOUR (INDEX)
- PROPOSED CONTOUR
- FF 78.0 — FINISHED FLOOR ELEVATION
- EX BUILDING
- PROPOSED BUILDING
- CONCRETE PAVEMENT
- ASPHALT (AC) PAVEMENT
- EX ASPHALT (AC) PAVEMENT
- GRAVEL SURFACING PER LA
- PAVERS PER LA
- GRASSPAVE PER LA
- SITE WALL
- TRENCH/CHANNEL DRAIN
- BIORETENTION POND
- QUARRY SPALL DISCHARGE PAD
- AREA/YARD DRAIN
- CATCH BASIN TYPE 1
- STORM DRAINAGE PIPE
- FOOTING/SUBSURFACE DRAIN
- SDCO — STORM DRAIN CLEANOUT
- FDCO — FOOTING DRAIN CLEANOUT
- DS — DOWNSPOUTS
- SSCO — SIDE SEWER PIPE
- SEWER CLEANOUT
- SIDE SEWER CONNECTION
- WORK WITHIN THE RECOMMENDED LIMIT OF DISTURBANCE (RLOD) SEE TREE RETENTION PLAN
- EX TREE TO REMAIN
- TREE PROTECTION
- WETLAND BUFFER DELINEATION

N

10 0 5 10 20

Scale 1"=10'

TREE PROTECTION MEASURES AND SPECIAL INSTRUCTIONS AROUND RETAINED TREES

1. REFER TO ARBORIST REPORT BY TREE SOLUTIONS INC. FOR TREE PROTECTION AND MANAGEMENT INFORMATION.
2. ANY WORK, ACTIVITY OR SOIL DISTURBANCE WITHIN THE PROTECTION FENCING, OR LIMIT OF DISTURBANCE, SHALL BE REVIEWED, APPROVED AND MONITORED BY THE PROJECT ARBORIST.
3. PRIOR TO ANY SITE WORK OR DEMOLITION, TREE PROTECTION FENCING (TPF) SHALL BE ERECTED AROUND RETAINED TREES AS SHOWN. TPF SHALL BE SIX (6) FOOT TEMPORARY CHAIN-LINK FENCE AND SHALL BE INSTALLED COMPLETELY ENCIRCLING THE RETAINED TREES.
4. A CITY PLANNER MUST APPROVE ANY MODIFICATIONS TO THE FENCING MATERIAL AND LOCATION.
5. THE AREA PROTECTED BY THE TPF IS OFF LIMITS TO ALL CONSTRUCTION RELATED ACTIVITY.
6. FENCING SHALL NOT BE MOVED OR REMOVED UNLESS APPROVED BY A CITY PLANNER.
7. NO STOCKPILING OF MATERIALS, VEHICULAR OR PEDESTRIAN TRAFFIC, MATERIAL STORAGE OR USE OF EQUIPMENT OR MACHINERY SHALL BE ALLOWED WITHIN RECOMMENDED LIMIT OF DISTURBANCE (RLOD) TO THE EXTENT FEASIBLE. SOIL PROTECTION IS REQUIRED FOR CONSTRUCTION DISTURBANCE WITHIN THE RLOD. THIS INCLUDES BUT IS NOT LIMITED TO 6-INCHES OF WOOD CHIPS COVERED WITH ¾" PLYWOOD OR COMPOSITE MATS.
8. ALL GROUNDWORK WITHIN RLOD SHALL BE MONITORED BY PROJECT ARBORIST TO ASSESS ROOT IMPACTS AND GUIDE ROOT CUTTING AS NECESSARY. FOR ANY UTILITY TRENCHES OR OTHER IMPROVEMENTS WITHIN THE RLOD OF AN EXISTING TREE, THE CONTRACTOR SHALL AIR SPADE OR DIG BY HAND EXCAVATIONS. CONTRACTOR SHALL ONLY CUT REQ'D ROOTS LESS THAN 2"ø THAT INTERFERE WITH THE INSTALLATION OF THE PROPOSED IMPROVEMENTS. EXPOSED ROOTS GREATER THAN 2-INCHES IN DIAMETER SHALL BE KEPT MOIST UNTIL BACKFILLED.
9. BRANCH PRUNING SHALL BE PERFORMED, BY AN APPROVED ISA CERTIFIED ARBORIST, WHERE LIMBS OVERHANG THE TPF TO REDUCE INJURY FROM EQUIPMENT. SEE ARBORIST REPORT FOR SPECIFIC TREE PRUNING RECOMMENDATIONS.

811 Know what's **below**. **Call** before you dig. Dial 811

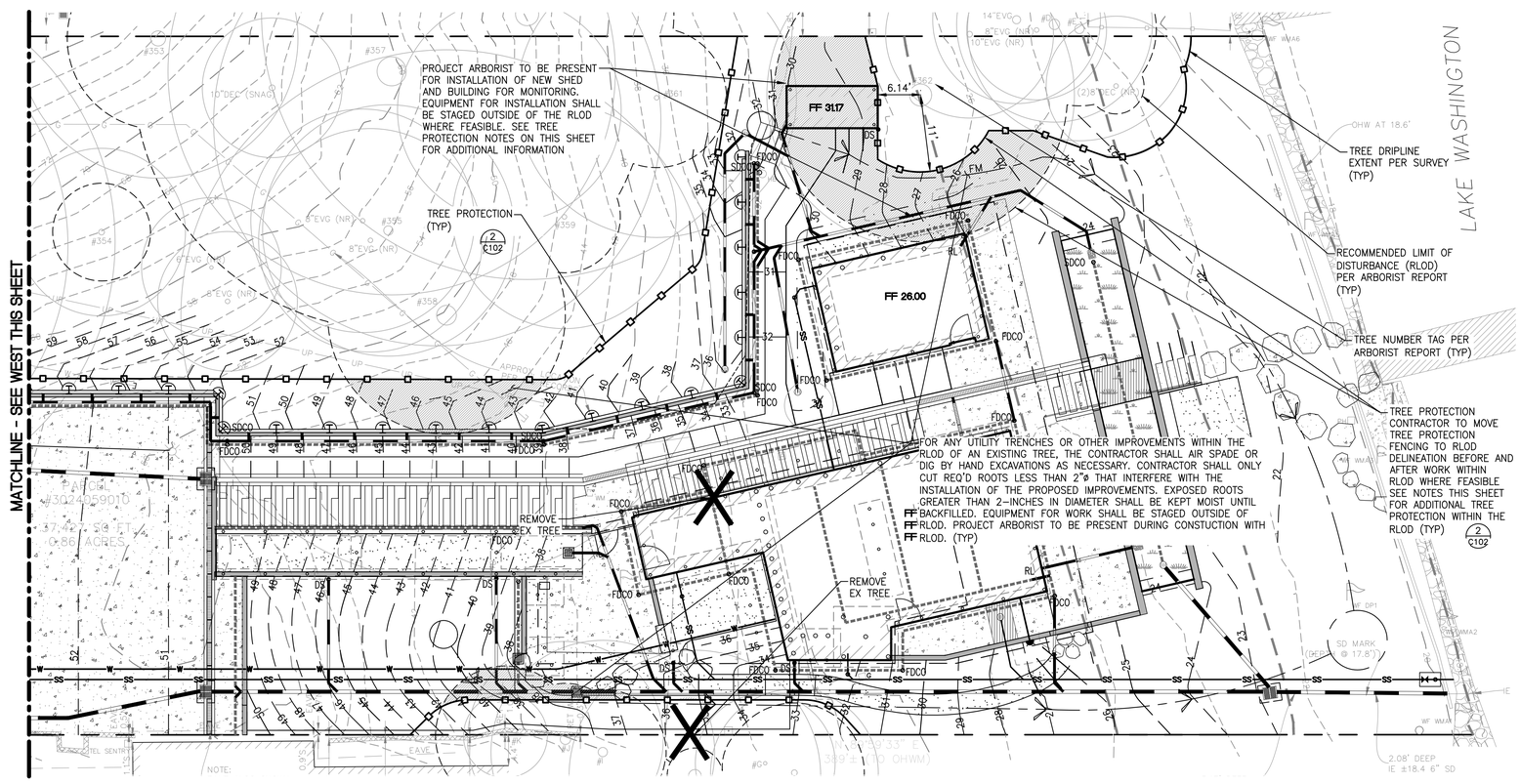

MILLER HULL

The Miller Hull Partnership, LLP
Architecture and Planning
Polson Building
71 Columbia, Sixth Floor
Seattle, WA 98104

Phone: 206.682.6837
Contact: Name

LPD engineering pllc
1932 First Ave
Suite 201
Seattle, WA 98101
p. 206.725.1211
f. 206.973.5344
www.lpdengineering.com

STAMP

LAURIE J. PEARD — STATE OF WASHINGTON — 30762 — REGISTERED PROFESSIONAL ENGINEER
2-22-2023

MERCER ISLAND — REVIEWED FOR CODE COMPLIANCE — March 27, 2023 — SITE COPY

MERCER ISLAND HOUSE: CASCADE

6838 96TH AVE SE
MERCER ISLAND, WA 98040

SUBMITTAL

100% CONSTRUCTION DOCUMENTS

FEBRUARY 24, 2023

REVISIONS

No.	Description	Date
1	BUILDING PERMIT RESUBMITTAL	10/27/22
2	BUILDING PERMIT RESUBMITTAL 2	01/06/22
3	BUILDING PERMIT RESUBMITTAL 3	02/24/23

Drawn: EVW
Checked: ACW
M|H Proj No.: A20.0085.00
Issue Date: FEBRUARY 24, 2023

SHEET

TREE RETENTION PLAN B- PROPOSED

C101B

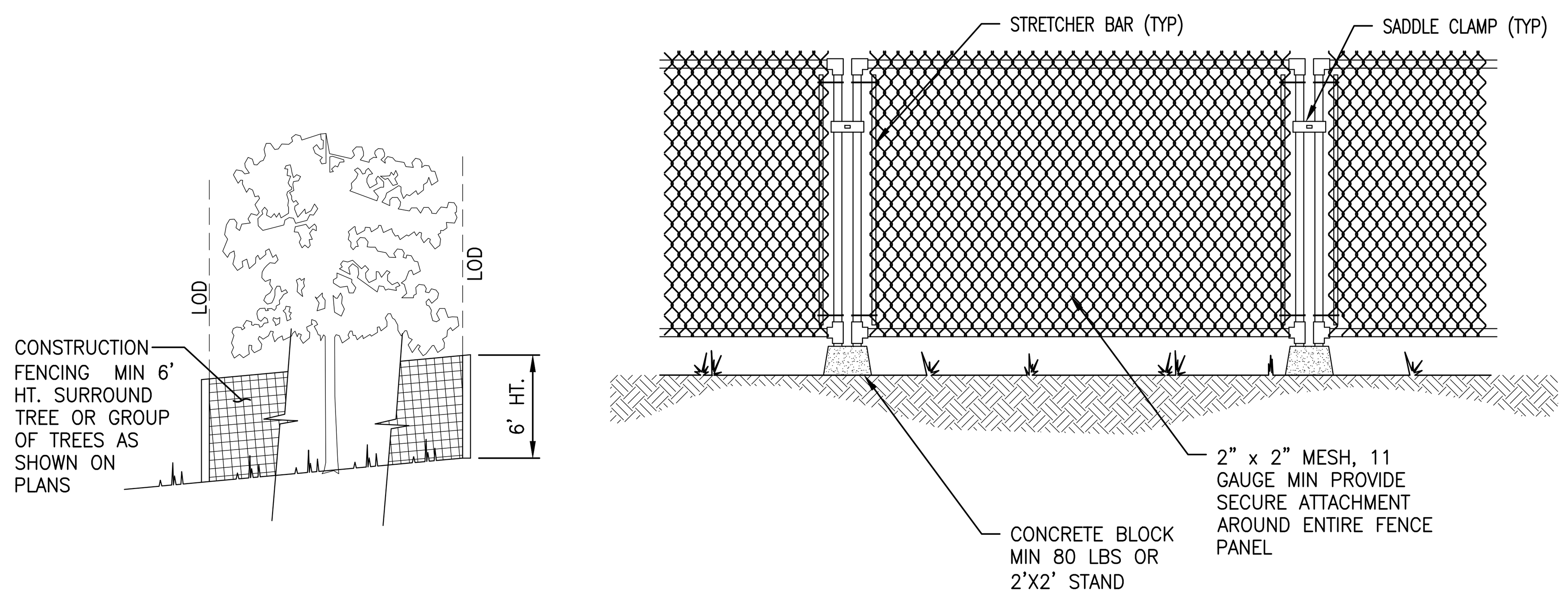

NOTES:

1. A 6 FOOT HIGH TEMPORARY FENCE MUST BE PLACED PRIOR TO THE COMMENCEMENT OF CLEARING OR EARTHWORK. NOTIFY THE CLEARING AND GRADING INSPECTOR TO GET BOTH THE INSPECTION AND WRITTEN APPROVAL OF FLAGGED TREES AND TEMPORARY PROTECTION FENCING AROUND TREES TO BE SAVED PER THE APPROVED CLEARING AND GRADING PLAN.
2. NO STOCKPILING OF MATERIAL AND NO VEHICULAR TRAFFIC ARE ALLOWED WITHIN THE LIMITS OF THE DISTURBANCE (LOD), THE TEMPORARY FENCING, UNLESS APPROVED BY THE ARBORIST. FILLING, EXCAVATION, AND CLEARING MUST BE ACCOMPLISHED BY HAND METHODS ONLY UNLESS APPROVED BY ARBORIST.
3. ROOTS OF TREES TO BE SAVED WHICH ARE DAMAGED DURING CONSTRUCTION MUST BE TREATED IN THE FOLLOWING WAY: FOR DAMAGED ROOTS OVER 2" IN DIAMETER, MAKE A CLEAN, STRAIGHT CUT TO REMOVE THE DAMAGED PORTION OF THE ROOT ALL EXPOSED ROOTS WILL BE TEMPORARILY COVERED WITH DAMP BURLAP OR WOOD SHAVINGS TO PREVENT DRYING AND COVERED WITH EARTH AS SOON AS POSSIBLE.

NTS
TREE PROTECTION FENCING 2

NTS
NOT USED 3

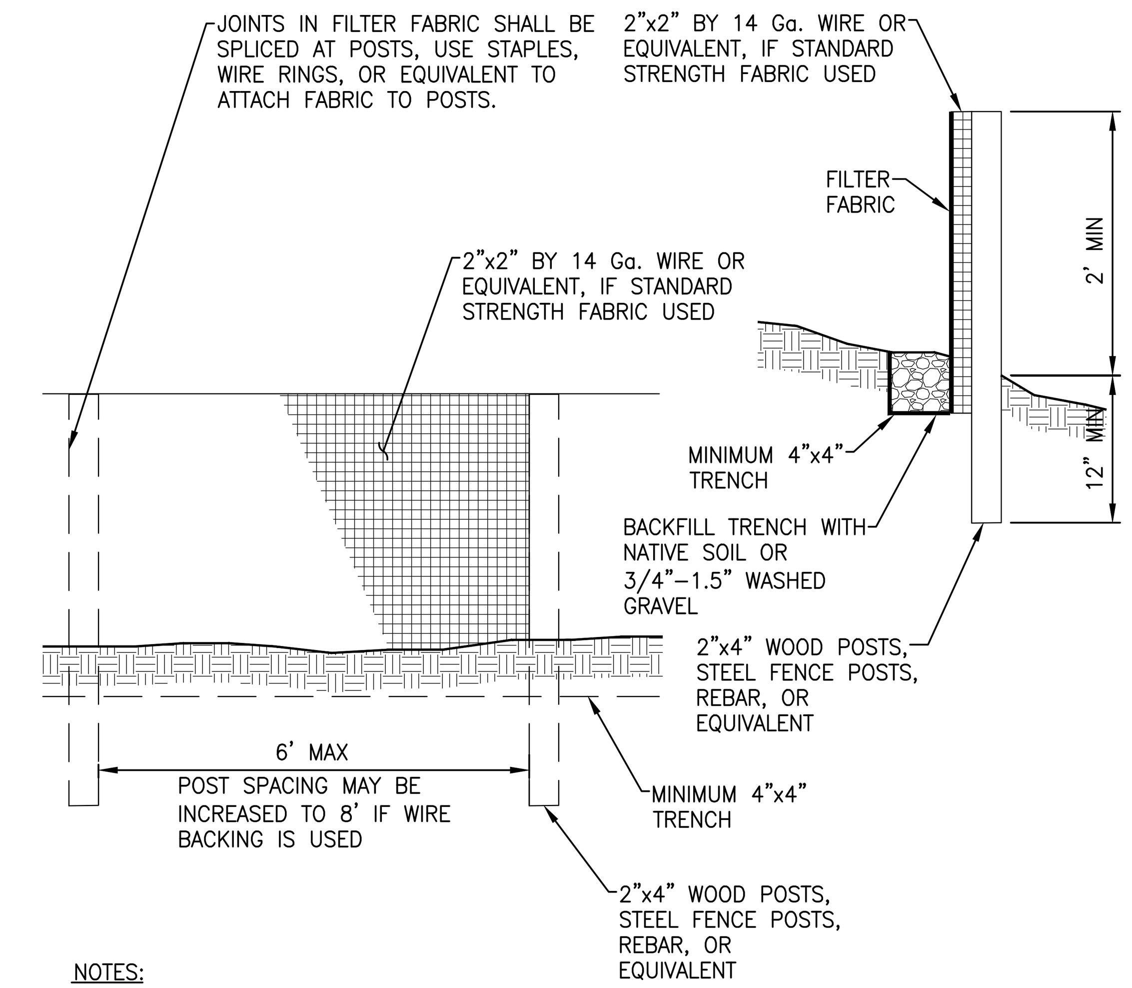

NOTES:

1. SILT FENCING WITHIN THE TREE PROTECTION ZONE OF RETAINED TREES SHALL BE INSTALLED IN A MANNER THAT DOES NOT SEVER ROOTS. INSTALL SO THAT SILT FENCING SITS ON THE GROUND AND IS WEIGHED IN PLACE BY SANDBAGS OR GRAVEL. DO NOT TRENCH TO INSERT SILT FENCING INTO THE GROUND.

NTS
SILT FENCE 4

EROSION AND SEDIMENTATION CONTROL NOTES

1. THE IMPLEMENTATION OF THESE EROSION SEDIMENTATION CONTROL (ESC) PLANS AND THE CONSTRUCTION, MAINTENANCE, REPLACEMENT, AND UPGRADING OF THESE ESC FACILITIES IS THE RESPONSIBILITY OF THE CONTRACTOR UNTIL ALL CONSTRUCTION IS APPROVED.
2. THE ESC FACILITIES SHOWN ON THIS PLAN MUST BE CONSTRUCTED IN CONJUNCTION WITH ALL CLEARING AND GRADING ACTIVITIES IN SUCH A MANNER AS TO INSURE THAT SEDIMENT-LADEN WATER DOES NOT ENTER THE DRAINAGE SYSTEM OR VIOLATE APPLICABLE WATER STANDARDS, AND MUST BE COMPLETED PRIOR TO ALL OTHER CONSTRUCTION.
3. THE ESC FACILITIES SHOWN ON THIS PLAN ARE THE MINIMUM REQUIREMENTS FOR ANTICIPATED SITE CONDITIONS. DURING THE CONSTRUCTION PERIOD, THESE ESC FACILITIES SHALL BE UPGRADED (E.G. ADDITIONAL SUMPS, RELOCATION OF DITCHES AND SILT FENCES), AS NEEDED FOR UNEXPECTED STORM EVENTS. ADDITIONALLY MORE ESC FACILITIES MAY BE REQUIRED TO ENSURE COMPLETE SILTATION CONTROL. THEREFORE, DURING THE COURSE OF CONSTRUCTION IT SHALL BE THE OBLIGATION AND RESPONSIBILITY OF THE CONTRACTOR TO ADDRESS ANY NEW CONDITIONS THAT MAY BE CREATED BY THEIR ACTIVITIES AND TO PROVIDE ADDITIONAL FACILITIES OVER AND ABOVE THE MINIMUM REQUIREMENTS AS MAY BE NEEDED.
4. THE ESC FACILITIES SHALL BE INSPECTED DAILY DURING NON-RAINFALL PERIODS, EVERY HOUR (DAYLIGHT) DURING A RAINFALL EVENT AND AT THE END OF EVERY RAINFALL BY THE PERMIT HOLDER/CONTRACTOR AND MAINTAINED AS NECESSARY TO ENSURE THEIR CONTINUED FUNCTIONING. IN ADDITION, TEMP. SILTATION PONDS AND ALL TEMP. SILTATION CONTROLS SHALL BE MAINTAINED IN A SATISFACTORY CONDITION UNTIL SUCH TIME THAT CLEARING AND OR CONSTRUCTION IS COMPLETED, PERMANENT DRAINAGE FACILITIES ARE OPERATIONAL, AND THE POTENTIAL FOR EROSION HAS PASSED.
5. ANY AREA STRIPPED OF VEGETATION, INCLUDING ROADWAY EMBANKMENTS WHERE NO FURTHER WORK IS ANTICIPATED FOR A PERIOD OF SEVEN (7) DAYS, SHALL BE IMMEDIATELY STABILIZED WITH THE APPROVED ESC METHODS (E.G. SEEDING, MULCHING, NETTING, EROSION, BLANKETS, ETC.)
6. ANY AREAS NEEDING ESC MEASURES, NOT REQUIRING IMMEDIATE ATTENTION, SHALL BE ADDRESSED WITHIN SEVEN (7) DAYS.
7. THE ESC FACILITIES ON INACTIVE SITES SHALL BE INSPECTED AND MAINTAINED A MINIMUM OF ONCE A MONTH OR WITHIN THE 48 HOURS FOLLOWING A STORM EVENT.
8. AT NO TIME SHALL MORE THAN ONE FOOT OF SEDIMENT BE ALLOWED TO ACCUMULATE WITHIN A CATCH BASIN. ALL CATCH BASINS AND CONVEYANCE LINES SHALL BE CLEANED PRIOR TO PAVING. THE CLEANING OPERATION SHALL NOT FLUSH SEDIMENT LADEN WATER INTO DOWNSTREAM SYSTEM.
9. WHERE SEEDING FOR TEMPORARY EROSION CONTROL IS REQUIRED, FAST GERMINATING GRASSES SHALL BE APPLIED AT AN APPROPRIATE RATE (E.G. ANNUAL OR PERENNIAL RYE APPLIED AT APPROXIMATELY 80 POUNDS PER ACRE).
10. WHERE STRAW MULCH FOR TEMPORARY EROSION CONTROL IS REQUIRED, IT SHALL BE APPLIED AT A MINIMUM THICKNESS OF THREE INCHES.
11. ALL WORK AND MATERIALS SHALL BE IN ACCORDANCE WITH THE CITY OF MERCER ISLAND STANDARDS AND SPECIFICATIONS.
12. EROSION/SEDIMENTATION CONTROL FACILITIES SHALL BE CONSTRUCTED IN ACCORDANCE WITH THE DETAILS IN DEPARTMENT OF ECOLOGY STORMWATER MANAGEMENT MANUAL, UNLESS OTHERWISE APPROVED BY THE CITY ENGINEER.
13. A COPY OF THE APPROVED EROSION CONTROL PLANS MUST BE ON THE JOB SITE WHENEVER CONSTRUCTION IS IN PROGRESS.
14. TEMPORARY EROSION/SEDIMENTATION CONTROLS SHALL BE INSTALLED & OPERATING PRIOR TO ANY GRADING OR LAND CLEARING.
15. WHEREVER POSSIBLE, MAINTAIN NATURAL VEGETATION FOR SILT CONTROL.
16. ALL CUT AND FILL SLOPES 5:1 (5 FEET HORIZONTAL TO 1 FOOT VERTICAL) OR STEEPER THAT WILL BE LEFT EXPOSED FOR MORE THAN 7 DAYS SHALL BE PROTECTED BY JUTE MATTING, PLASTIC SHEETING, MULCH, OR OTHER APPROVED STABILIZATION METHOD AND PROVIDED WITH ADEQUATE RUNOFF CONVEYANCE TO INTERCEPT RUNOFF AND CONVEY IT TO AN APPROVED STORM DRAIN.
17. OFF-SITE STREETS MUST BE KEPT CLEAN AT ALL TIMES. IF DIRT IS DEPOSITED ON THE PUBLIC STREET, THE STREET SHALL BE CLEANED. ALL VEHICLES SHALL LEAVE THE SITE BY WAY OF THE CONSTRUCTION VEHICLE ENTRANCE AND SHALL BE CLEANED OF MUD PRIOR TO EXITING ONTO THE STREET. SILT SHALL BE CLEANED FROM ALL CATCH BASINS WHEN THE BOTTOM HALF BECOMES FILLED WITH SILT.
18. ANY CATCH BASIN COLLECTING WATER FROM THE SITE, WHETHER THEY ARE ON OR OFF OF THE SITE, SHALL HAVE THEIR GRATES COVERED WITH FILTER FABRIC DURING CONSTRUCTION.
19. IF ANY PORTION OF THE EROSION/SEDIMENTATION CONTROL ELEMENTS ARE DAMAGED OR NOT FUNCTIONING, OR IF THE CLEARING LIMIT BOUNDARY BECOMES NON-DEFINED, IT SHALL BE REPAIRED IMMEDIATELY.

NTS
EROSION AND SEDIMENTATION CONTROL NOTES 9

CITY OF MERCER ISLAND NOTES

1. ANY CHANGES TO THE APPROVED PLANS REQUIRES CITY APPROVAL THROUGH A REVISION.
2. APPLICANT IS RESPONSIBLE FOR ANY DAMAGES TO UNDERGROUND UTILITIES CAUSED FROM THIS CONSTRUCTION.
3. CATCH BASIN FILTERS SHOULD BE PROVIDED FOR ALL STORM DRAIN CATCH BASIN/INLETS DOWNSLOPE AND WITHIN 500 FEET OF THE CONSTRUCTION AREA. CATCH BASIN FILTERS SHOULD BE DESIGNED BY THE MANUFACTURER FOR USE AT CONSTRUCTION SITES AND APPROVED BY THE CITY INSPECTOR. CATCH BASIN FILTERS SHOULD BE INSPECTED FREQUENTLY, ESPECIALLY AFTER STORM EVENTS. IF THE FILTER BECOMES CLOGGED, IT SHOULD BE CLEANED OR REPLACED.
4. CONTRACTORS SHALL VERIFY LOCATIONS AND DEPTHS OF UTILITIES.
5. AT LEAST 48 HOURS PRIOR TO CONSTRUCTION, CALL "ONE CALL" AT 1.800.425.5555.
6. DO NOT BACKFILL WITH NATIVE MATERIAL ON PUBLIC RIGHT-OF-WAY. ALL MATERIAL MUST BE IMPORTED.
7. EROSION CONTROL: ALL "LAND DISTURBING ACTIVITY" IS SUBJECT TO PROVISIONS OF MERCER ISLAND ORDINANCE 95C-118 "STORM WATER MANAGEMENT." SPECIFIC ITEMS TO BE FOLLOWED AT YOUR SITE.
8. PROTECT ADJACENT PROPERTIES FROM ANY INCREASED RUNOFF OR SEDIMENTATION DUE TO THE CONSTRUCTION PROJECT THROUGH THE USE OF APPROPRIATE "BEST MANAGEMENT PRACTICES" (BMP) EXAMPLES INCLUDE, BUT ARE NOT LIMITED TO, SEDIMENT TRAPS, SEDIMENT PONDS, FILTER FABRIC FENCES, VEGETATIVE BUFFER STRIPS OR BIOENGINEERED SWALES.
9. CONSTRUCTION ACCESS TO SITE SHOULD BE LIMITED TO ONE ROUTE. STABILIZE ENTRANCE WITH QUARRY SPALLS TO PREVENT SEDIMENT FROM LEAVING THE SITE OR ENTERING THE STORM DRAINS.
10. PREVENT SEDIMENT, CONSTRUCTION DEBRIS, PAINTS, SOLVENTS, ETC., OR OTHER TYPES OF POLLUTION FROM ENTERING PUBLIC STORM DRAINS. KEEP ALL POLLUTION ON YOUR SITE.
11. ALL EXPOSED SOILS SHALL REMAIN DENUDED FOR NO LONGER THAN SEVEN (7) DAYS AND SHALL BE BE STABILIZED WITH MULCH, HAY, OR THE APPROPRIATE GROUND COVER. ALL EXPOSED SOILS SHALL BE COVERED IMMEDIATELY DURING ANY RAIN EVENT.
12. INSTALLATION OF CONCRETE DRIVEWAYS, TREES, SHRUBS, IRRIGATION, BOULDERS, BERMS, WALLS, GATES, AND OTHER IMPROVEMENTS ARE NOT ALLOWED IN THE PUBLIC RIGHT-OF-WAY WITHOUT PRIOR APPROVAL, AND AN ENCROACHMENT AGREEMENT AND RIGHT OF WAY PERMIT FROM THE SENIOR DEVELOPMENT ENGINEER.
13. OWNER SHALL CONTROL DISCHARGE OF SURFACE DRAINAGE RUNOFF FROM EXISTING AND NEW IMPERVIOUS AREAS IN A RESPONSIBLE MANNER. CONSTRUCTION OF NEW GUTTERS AND DOWNSPOUTS, DRY WELLS, LEVEL SPREADERS OR DOWNSTREAM CONVEYANCE PIPE MAY BE NECESSARY TO MINIMIZE DRAINAGE IMPACT TO YOUR NEIGHBORS. CONSTRUCTION OF MINIMUM DRAINAGE IMPROVEMENTS SHOWN OR CALLED OUT ON THIS PLAN DOES NOT IMPLY RELIEF FROM CIVIL LIABILITY FOR YOUR DOWNSTREAM DRAINAGE.
14. POT HOLING THE PUBLIC UTILITIES IS REQUIRED PRIOR TO ANY GRADING ACTIVITIES LESS THAN 6" OVER THE PUBLIC MAINS (WATER, SEWER AND STORM SYSTEMS). IF THERE IS A CONFLICT, THE APPLICANT IS REQUIRED TO SUBMIT A REVISION FOR APPROVAL PRIOR TO ANY GRADING ACTIVITIES OVER THE PUBLIC MAINS.
15. REMEMBER: EROSION CONTROL IS YOUR FIRST INSPECTION.
16. ROOF DRAINS MUST BE CONNECTED TO THE STORM DRAIN SYSTEM AND INSPECTED BY THE PUBLIC WORKS DEPARTMENT PRIOR TO ANY BACKFILLING OF PIPE.
17. SILT FENCE: CLEAN AND PROVIDE REGULAR MAINTENANCE OF THE SILT FENCE. THE FENCE IS TO REMAIN VERTICAL AND IS TO FUNCTION PROPERLY THROUGHOUT THE TERM OF THE PROJECT.
18. WORK IN PUBLIC RIGHT OF WAY REQUIRES A RIGHT-OF-WAY USE PERMIT.
19. REFER TO WATER SERVICE PERMIT FOR ACTUAL LOCATION OF NEW WATER METER AND SERVICE LINE DETERMINED BY MERCER ISLAND WATER DEPARTMENT.
20. THE TV INSPECTION OF THE EXISTING SIDE SEWER TO THE CITY SEWER MAIN IS REQUIRED. IF THE RESULT OF THE TV INSPECTION IS NOT IN SATISFACTORY CONDITION, AS DETERMINED BY THE CITY OF MERCER ISLAND INSPECTOR, THE REPLACEMENT OF THE EXISTING SIDE SEWER IS REQUIRED. ALTERNATELY, A PRESSURE TEST OF THE SIDE SEWER, FROM SEWER MAIN TO POINT OF CONNECTION, MAY BE SUBSTITUTED FOR THE VIDEO INSPECTION.
21. NEWLY INSTALLED SIDE SEWER REQUIRES A 4 P.S.I. AIR TEST OR PROVIDE 10' OF HYDROSTATIC HEAD TEST.
22. THE LIMITS AND EXTENTS OF THE PAVEMENT IN THE PUBLIC RIGHT OF WAY SHALL BE DETERMINED BY THE CITY ENGINEER PRIOR TO FINALIZING THE PROJECT.
23. TREE PROTECTION INSPECTION REQUIRED BEFORE ANY WORK BEGINS, CALL 206-275-7713.

NTS
CITY OF MERCER ISLAND NOTES 10

NTS
NOT USED 7

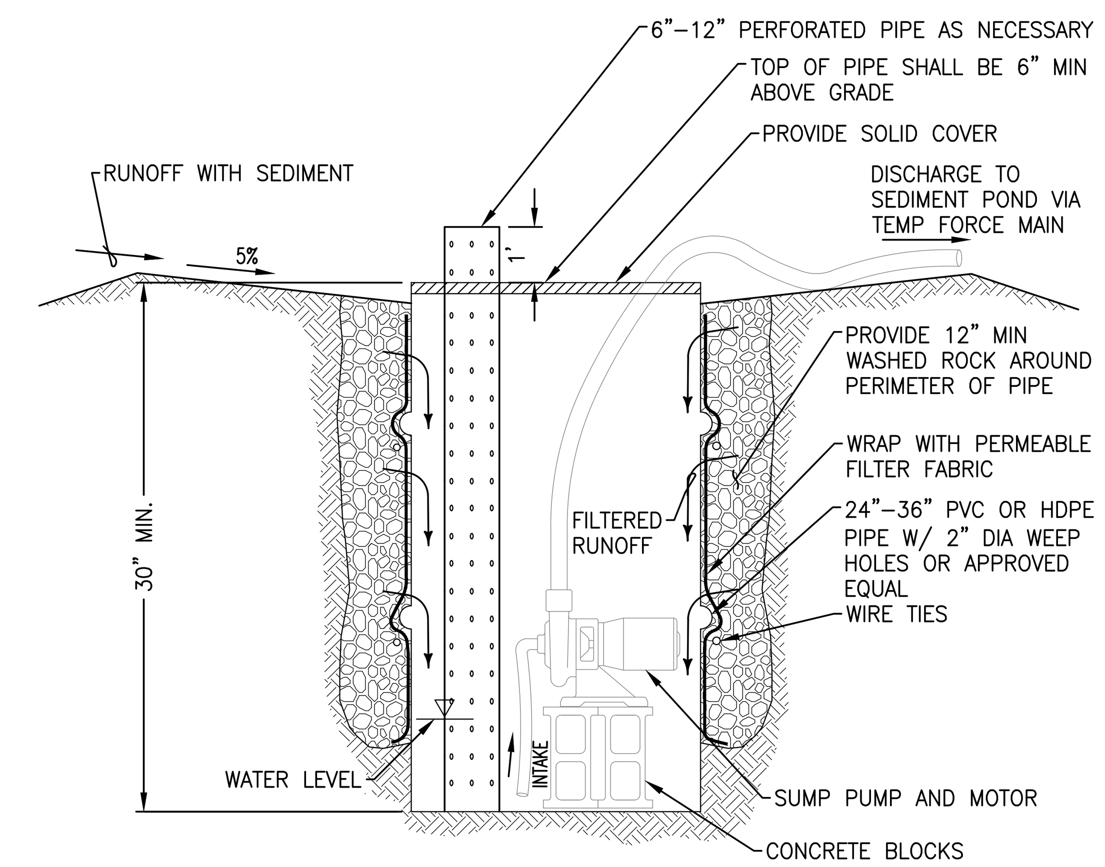

NTS
SUMP AND PUMP 8

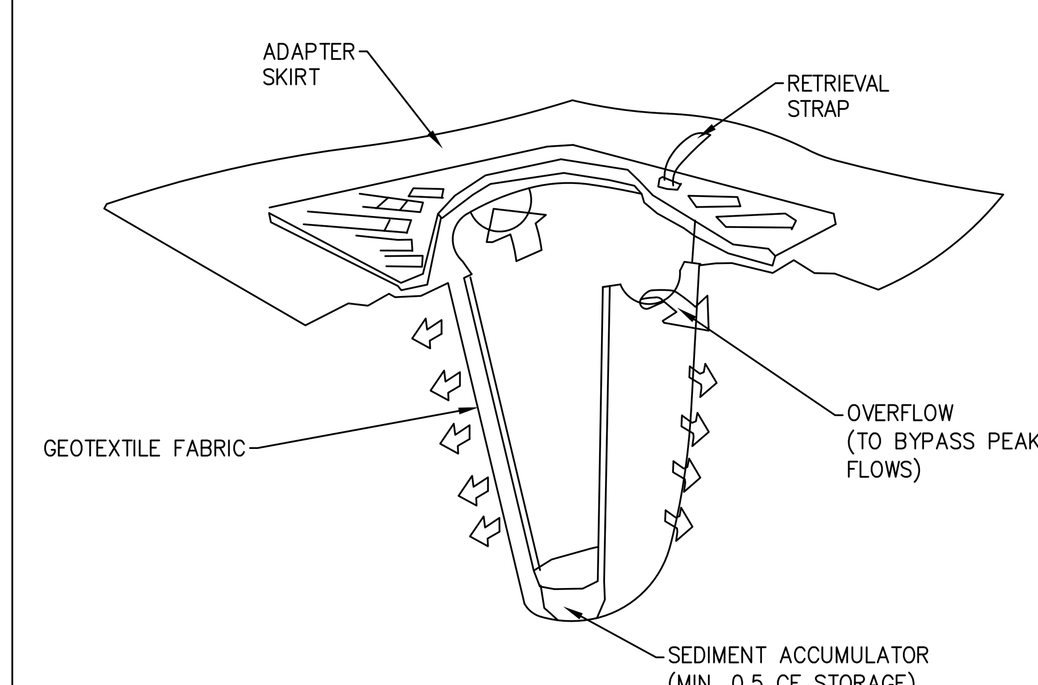

SCHEMATIC DETAIL

PROVIDE "STREAMGUARD SEDIMENT CATCH BASIN INSERT" OR APPROVED EQUAL
MANUFACTURER'S NAME: BOWHEAD ENVIRONMENTAL & SAFETY
ADDRESS: P.O. BOX 375 PRESTON, WA 98050
TELEPHONE: FOR INFORMATION: (800) 909-3677
WWW.SHOPBOWHEAD.COM

NTS
CATCH BASIN PROTECTION 11

NTS
NOT USED 12

MILLER HULL
The Miller Hull Partnership, LLP
Architecture and Planning
Polson Building
71 Columbia, Sixth Floor
Seattle, WA 98104
Phone: 206.682.6837
Contact: Name

LPD engineering pllc
1932 First Ave
Suite 201
Seattle, WA 98101
p. 206.725.1211
f. 206.973.5344
www.lpdengineering.com

STAMP

LAURIE J. PFARR · STATE OF WASHINGTON · 30766 REGISTERED · PROFESSIONAL ENGINEER
2-22-2023

REVIEWED FOR CODE COMPLIANCE
March 27, 2023
SITE COPY
CITY OF MERCER ISLAND WASHINGTON

MERCER ISLAND HOUSE: CASCADE

6838 96TH AVE SE
MERCER ISLAND, WA 98040

SUBMITTAL

100% CONSTRUCTION DOCUMENTS

FEBRUARY 24, 2023

REVISIONS

No.	Description	Date
1	BUILDING PERMIT RESUBMITTAL	10/27/22
2	BUILDING PERMIT RESUBMITTAL 2	01/06/22
3	BUILDING PERMIT RESUBMITTAL 3	02/24/23

Drawn: EVW
Checked: ACW
M|H Proj No.: A20.0085.00
Issue Date: FEBRUARY 24, 2023

SHEET

TESC DETAILS

C102

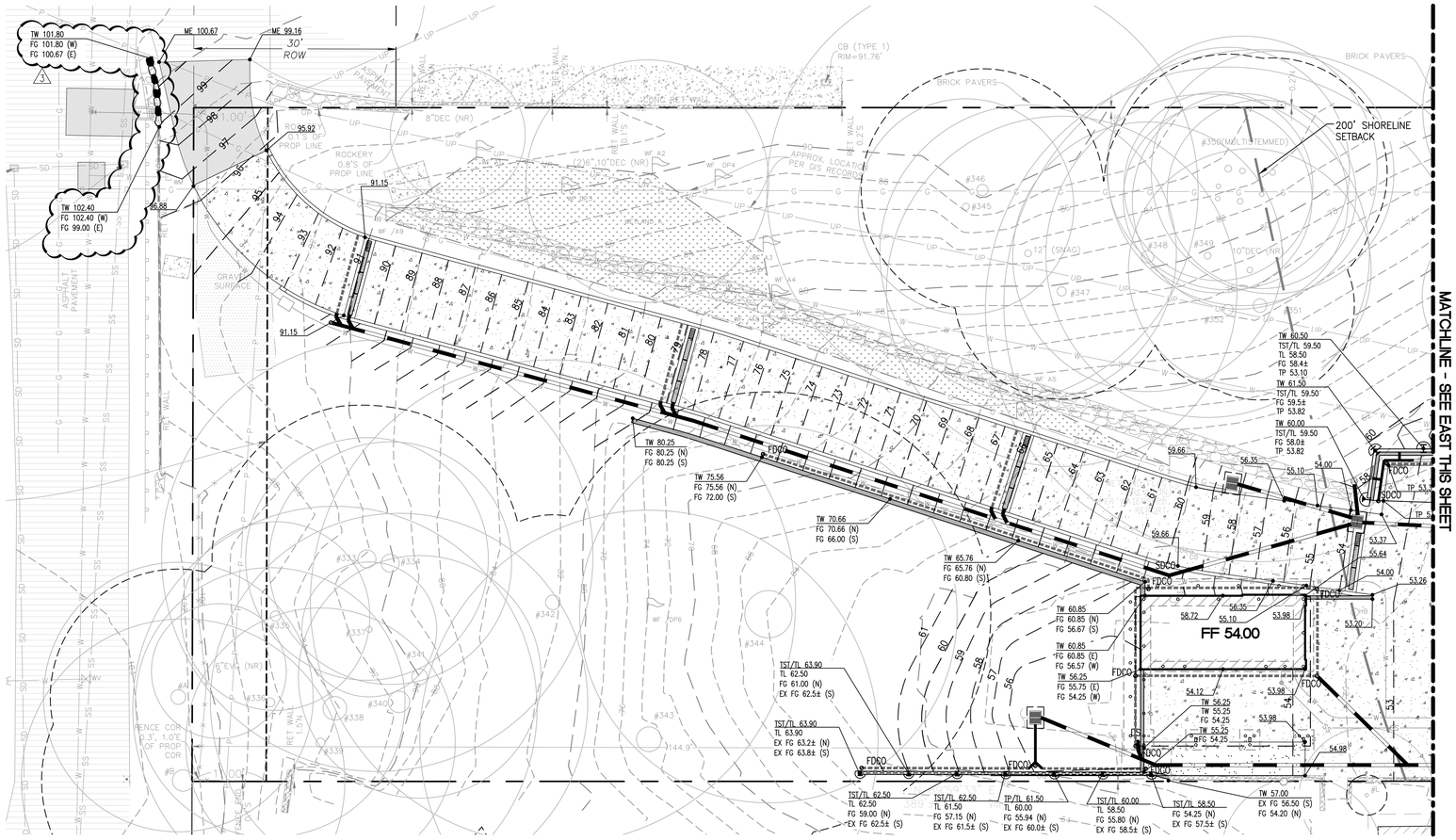

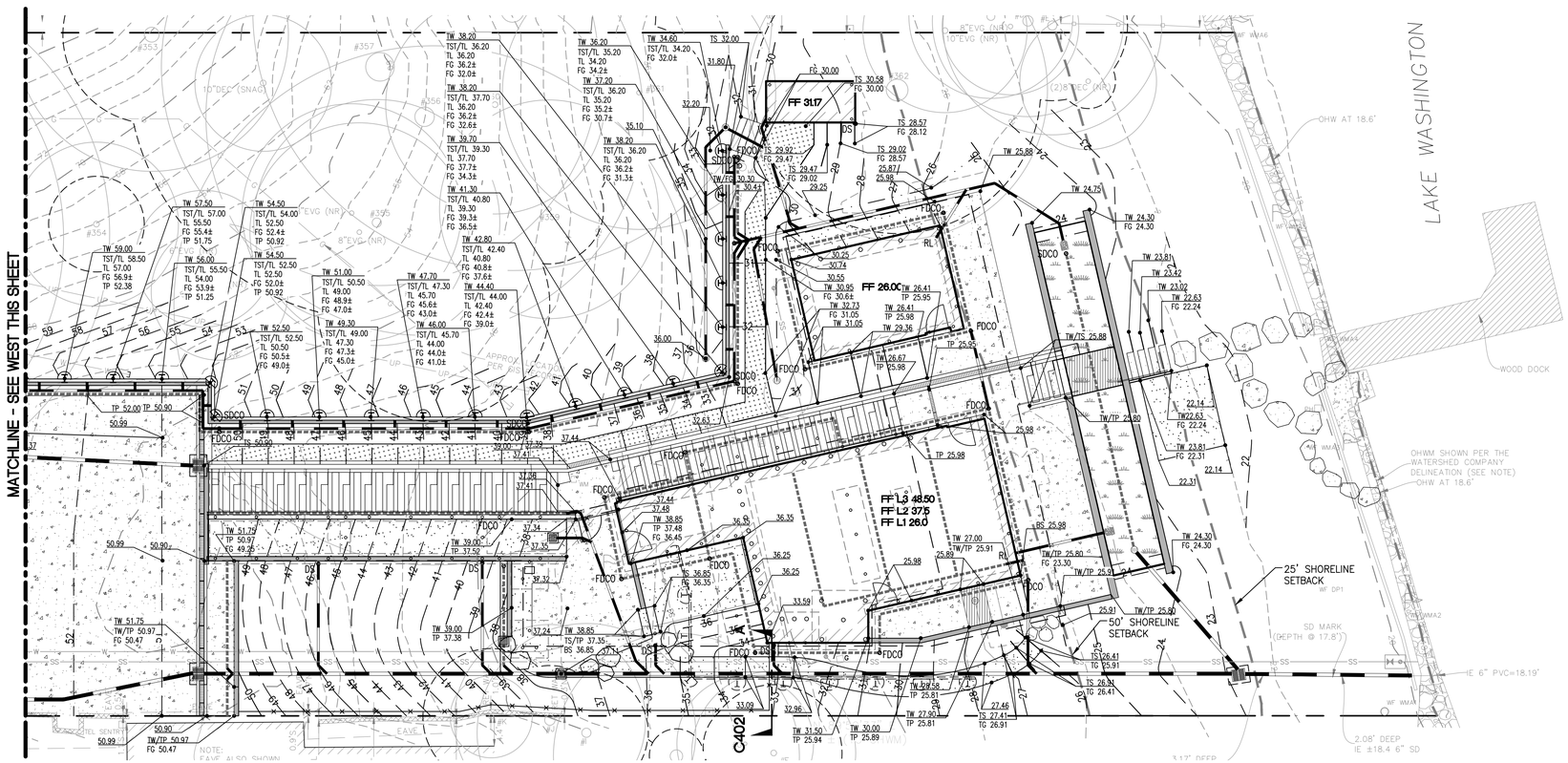

LEGEND

- PROPERTY LINE
- EX CONTOUR (INDEX)
- EX CONTOUR
- 230 PROPOSED CONTOUR (INDEX)
- 231 PROPOSED CONTOUR
- SPOT ELEVATION
- TOP OF PAVE, TOP OF WALL, FINISHED GRADE
- TOP OF STEP, BOTTOM STEP, MATCH EX
- FF 78.0 FINISHED FLOOR ELEVATION
- EX BUILDING
- PROPOSED BUILDING
- CONCRETE PAVEMENT
- ASPHALT (AC) PAVEMENT
- EX ASPHALT (AC) PAVEMENT
- GRAVEL SURFACING PER LA
- PAVERS PER LA
- GRASSPAVE PER LA
- SITE WALL
- TRENCH/CHANNEL DRAIN
- BIORETENTION POND
- QUARRY SPALL DISCHARGE PAD
- AREA/YARD DRAIN
- CATCH BASIN TYPE 1
- STORM DRAINAGE PIPE
- FOOTING/SUBSURFACE DRAIN
- SDCO STORM DRAIN CLEANOUT
- FDCO FOOTING DRAIN CLEANOUT
- DS DOWNSPOUTS
- SS SIDE SEWER PIPE
- SEWER CLEANOUT
- SIDE SEWER CONNECTION
- W WATER SERVICE LINES

N

10 0 5 10 20

Scale 1"=10'

811 Know what's **below**. **Call** before you dig. Dial 811

MILLER HULL

The Miller Hull Partnership, LLP
Architecture and Planning
Polson Building
71 Columbia, Sixth Floor
Seattle, WA 98104

Phone: 206.682.6837
Contact: Name

LPD engineering pllc
1932 First Ave
Suite 201
Seattle, WA 98101
p. 206.725.1211
f. 206.973.5344
www.lpdengineering.com

STAMP

LAURIE J. PFARR
STATE OF WASHINGTON
53766
REGISTERED PROFESSIONAL ENGINEER
2-22-2023

REVIEWED FOR CODE COMPLIANCE
March 27, 2023
SITE COPY

MERCER ISLAND HOUSE: CASCADE

6838 96TH AVE SE
MERCER ISLAND, WA 98040

SUBMITTAL

100% CONSTRUCTION DOCUMENTS

FEBRUARY 24, 2023

REVISIONS

No.	Description	Date
1	BUILDING PERMIT RESUBMITTAL	10/27/22
2	BUILDING PERMIT RESUBMITTAL 2	01/06/22
3	BUILDING PERMIT RESUBMITTAL 3	02/24/23

Drawn: EVW
Checked: ACW
M|H Proj No.: A20.0085.00
Issue Date: FEBRUARY 24, 2023

SHEET

GRADING PLAN

C200A

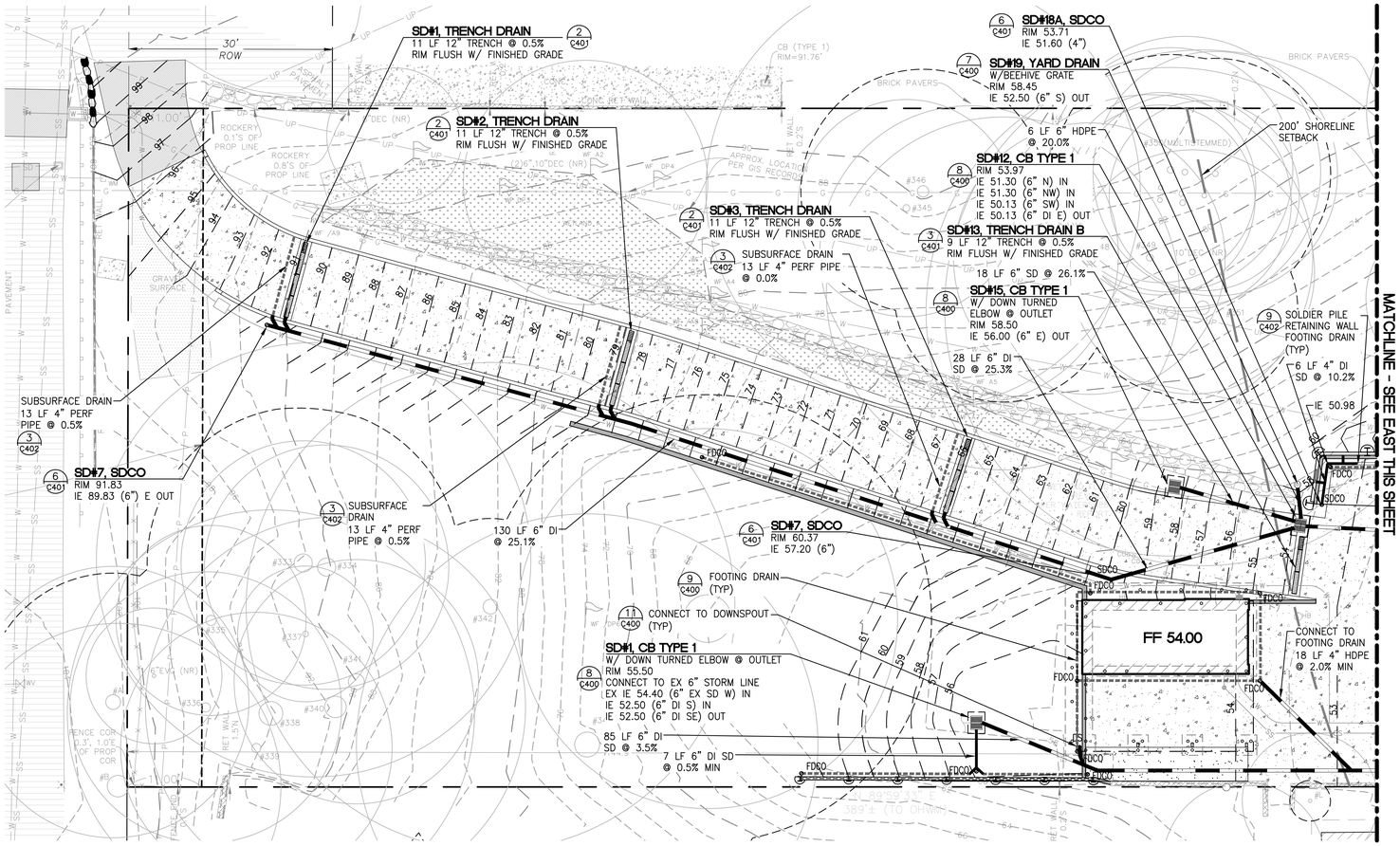

LEGEND

- PROPERTY LINE
- EX CONTOUR (INDEX)
- EX CONTOUR
- 230 PROPOSED CONTOUR (INDEX)
- 231 PROPOSED CONTOUR
- SPOT ELEVATION
- TOP OF PAVE, TOP OF WALL, FINISHED GRADE
- TOP OF STEP, BOTTOM STEP, MATCH EX
- FF 78.0 FINISHED FLOOR ELEVATION
- EX BUILDING
- PROPOSED BUILDING
- CONCRETE PAVEMENT
- ASPHALT (AC) PAVEMENT
- EX ASPHALT (AC) PAVEMENT
- GRAVEL SURFACING PER LA
- PAVERS PER LA
- GRASSPAVE PER LA
- SITE WALL
- TRENCH/CHANNEL DRAIN
- BIORETENTION POND
- QUARRY SPALL DISCHARGE PAD
- AREA/YARD DRAIN
- CATCH BASIN TYPE 1
- STORM DRAINAGE PIPE
- FOOTING/SUBSURFACE DRAIN
- SDCO STORM DRAIN CLEANOUT
- FDCO FOOTING DRAIN CLEANOUT
- DS DOWNSPOUTS
- SS SIDE SEWER PIPE
- SEWER CLEANOUT
- SIDE SEWER CONNECTION
- W WATER SERVICE LINES

N

10 0 5 10 20

Scale 1"=10'

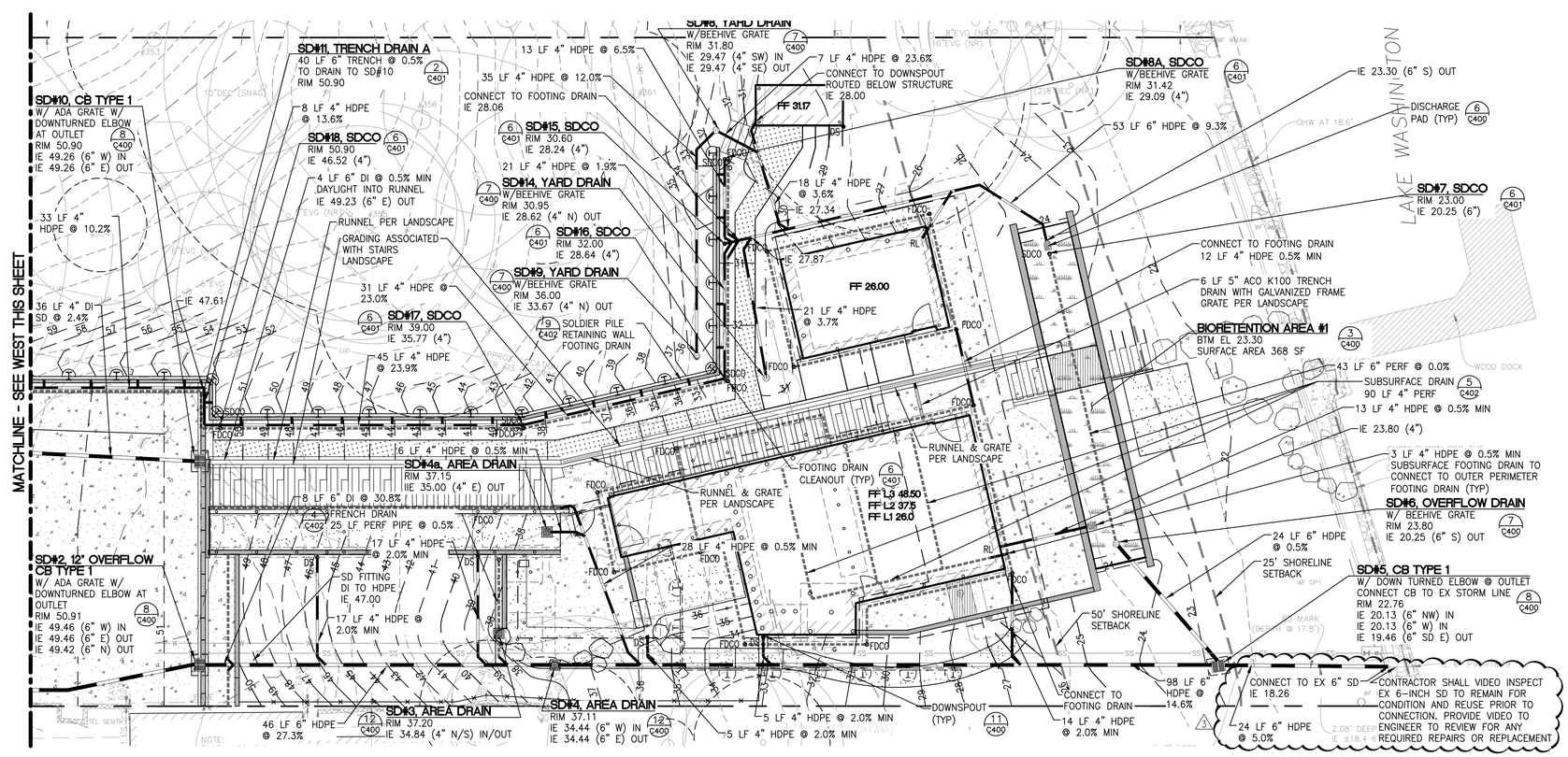

Know what's **below**.
Call before you dig.
Dial 811

MILLER HULL
The Miller Hull Partnership, LLP
Architecture and Planning
Polson Building
71 Columbia, Sixth Floor
Seattle, WA 98104

Phone: 206.682.6837
Contact: Name

LPD engineering pllc
1932 First Ave
Suite 201
Seattle, WA 98101
p. 206.725.1211
f. 206.973.5344
www.lpdengineering.com

STAMP

LAURIE J. PEARL — STATE OF WASHINGTON — 30798 — REGISTERED PROFESSIONAL ENGINEER
2-22-2023

MERCER ISLAND — REVIEWED FOR CODE COMPLIANCE — March 27, 2023 — SITE COPY

MERCER ISLAND HOUSE: CASCADE

6838 96TH AVE SE
MERCER ISLAND, WA 98040

SUBMITTAL

100% CONSTRUCTION DOCUMENTS

FEBRUARY 24, 2023

REVISIONS

No.	Description	Date
1	BUILDING PERMIT RESUBMITTAL	10/27/22
2	BUILDING PERMIT RESUBMITTAL 2	01/06/22
3	BUILDING PERMIT RESUBMITTAL 3	02/24/23

Drawn: EVW
Checked: ACW
M|H Proj No.: A20.0085.00
Issue Date: FEBRUARY 24, 2023

SHEET

DRAINAGE PLAN

C200B

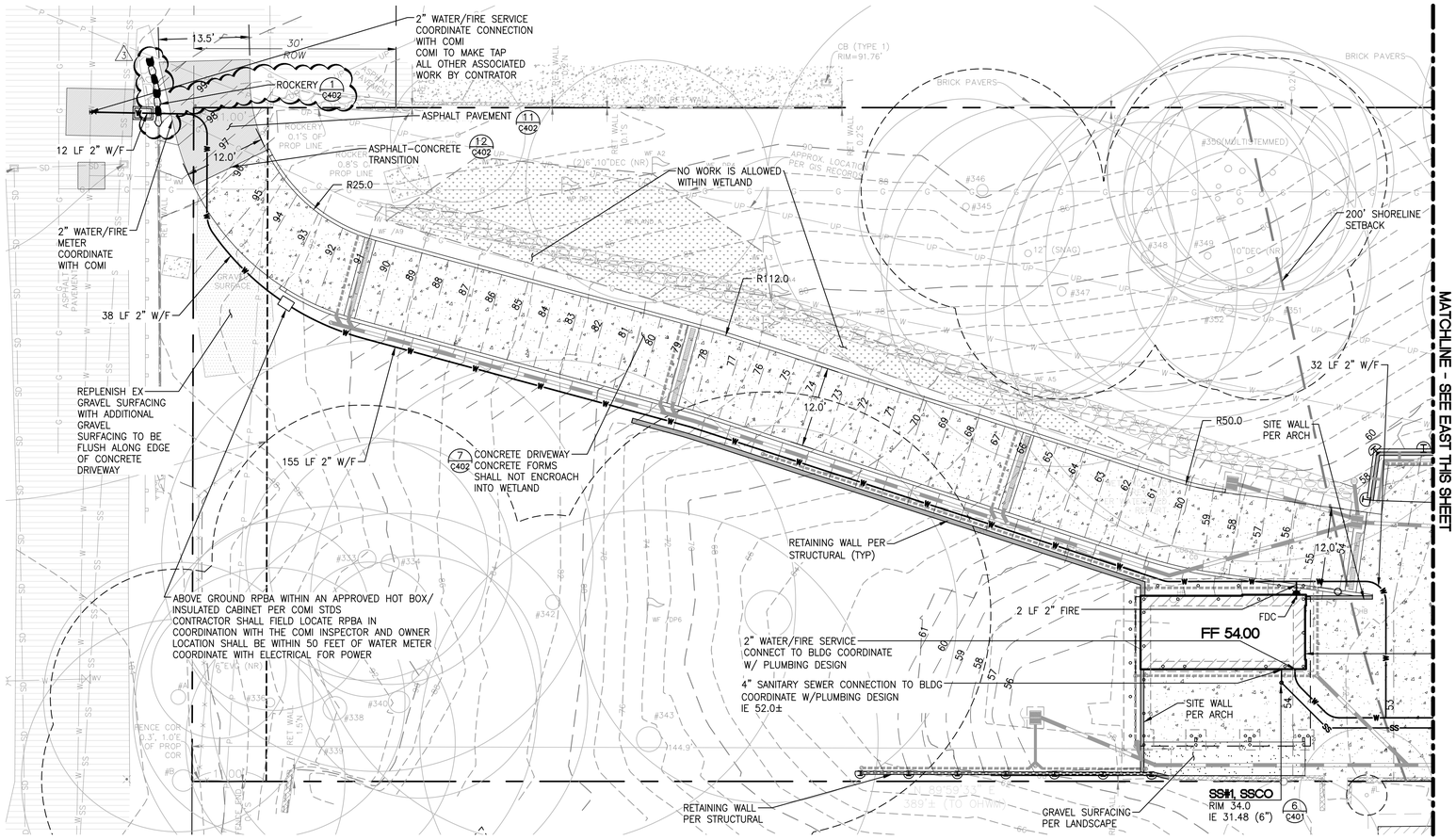

LEGEND

- PROPERTY LINE
- EX CONTOUR (INDEX)
- EX CONTOUR
- PROPOSED CONTOUR (INDEX)
- PROPOSED CONTOUR
- FF 78.0 — FINISHED FLOOR ELEVATION
- EX BUILDING
- PROPOSED BUILDING
- CONCRETE PAVEMENT
- ASPHALT (AC) PAVEMENT
- EX ASPHALT (AC) PAVEMENT
- GRAVEL SURFACING PER LA
- PAVERS PER LA
- GRASSPAVE PER LA
- SITE WALL
- TRENCH/CHANNEL DRAIN
- BIORETENTION POND
- QUARRY SPALL DISCHARGE PAD
- AREA/YARD DRAIN
- CATCH BASIN TYPE 1
- STORM DRAINAGE PIPE
- FOOTING/SUBSURFACE DRAIN
- STORM DRAIN CLEANOUT
- FOOTING DRAIN CLEANOUT
- DOWNSPOUTS
- SSCO — SIDE SEWER PIPE
- SEWER CLEANOUT
- SIDE SEWER CONNECTION
- WATER SERVICE LINES

N

Scale 1"=10'

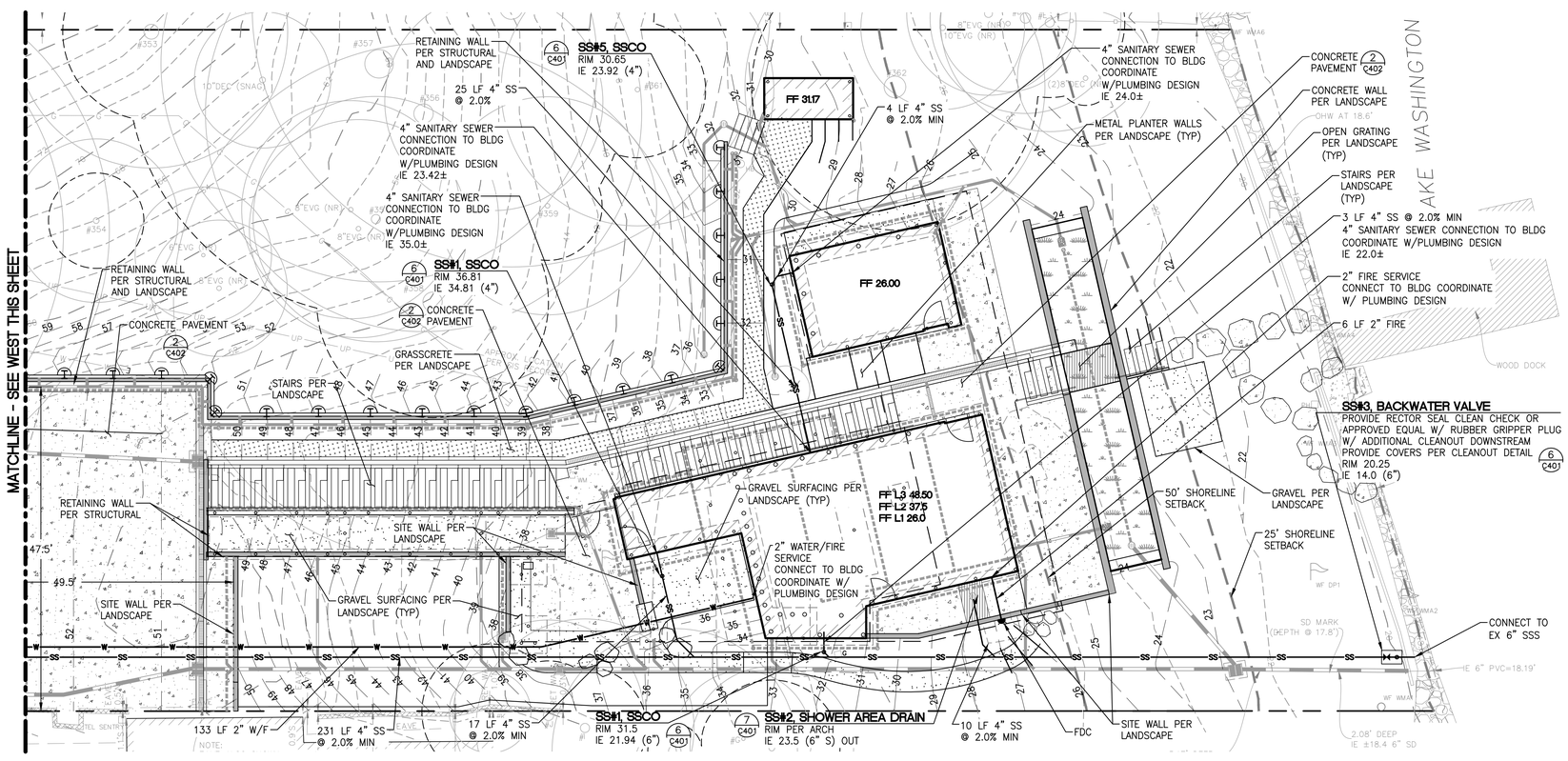

Know what's **below**.
Call before you dig.
Dial 811

MILLER HULL
The Miller Hull Partnership, LLP
Architecture and Planning
Polson Building
71 Columbia, Sixth Floor
Seattle, WA 98104

Phone: 206.682.6837
Contact: Name

LPD engineering pllc
1932 First Ave
Suite 201
Seattle, WA 98101
p. 206.725.1211
f. 206.973.5344
www.lpdengineering.com

STAMP

LAURIE J. PEARL — STATE OF WASHINGTON — 30762 — REGISTERED PROFESSIONAL ENGINEER
2-22-2023

MERCER ISLAND — REVIEWED FOR CODE COMPLIANCE — March 27, 2023 — SITE COPY

MERCER ISLAND HOUSE: CASCADE

6838 96TH AVE SE
MERCER ISLAND, WA 98040

SUBMITTAL

100% CONSTRUCTION DOCUMENTS

FEBRUARY 24, 2023

REVISIONS

No.	Description	Date
1	BUILDING PERMIT RESUBMITTAL	10/27/22
2	BUILDING PERMIT RESUBMITTAL 2	01/06/22
3	BUILDING PERMIT RESUBMITTAL 3	02/24/23

Drawn: EVW
Checked: ACW
M|H Proj No.: A20.0085.00
Issue Date: FEBRUARY 24, 2023

SHEET

UTILITIES & PAVING PLAN

C300

CONSTRUCTION SEQUENCE FOR BIORETENTION AREA

1. INSTALL TEMPORARY SEDIMENT CONTROL BMPS AS SHOWN ON PLAN.
2. COMPLETE SITE GRADING. PROVIDE PROTECTION SO THAT DRAINAGE IS PROHIBITED FROM ENTERING BIORETENTION CONSTRUCTION AREA.
3. SITE STABILIZATION TO BE COMPLETE PRIOR TO INSTALLATION OF BIORETENTION AREA. BIORETENTION AREAS THAT WERE USED AS TEMPORARY SEDIMENT TRAPS SHOULD BE EXCAVATED 12 INCHES BELOW THE BOTTOM OF THE SEDIMENT TRAP PRIOR TO CONSTRUCTION OF BIORETENTION AREA.
4. EXCAVATE BIORETENTION AREA TO PROPOSED DEPTH AND SCARIFY THE TOP 3"–4" OF EXISTING SOIL SURFACES.
5. INSTALL IMPERVIOUS LINER. SLIT LINER AND OVERLAP 12" OVER OUTLET PIPE.
6. INSTALL PVC SLOTTED UNDERDRAIN PIPE AND MINER AGGREGATE PER PLAN. SEE STORM DRAIN SPECS FOR SLOT DIMENSIONS.
7. BACKFILL BIORETENTION AREA WITH AGGREGATE MATERIAL AND BIORETENTION SOIL MIX, OVERFILLING IS RECOMMENDED TO ACCOUNT FOR SETTLEMENT. LIGHT HAND TAMPING IS ACCEPTABLE IF NECESSARY.
8. BIORETENTION SOIL MIX SHALL CONSIST OF THE FOLLOWING:
   – AGGREGATE TO COMPOST RATIO: 60% MINERAL AGGREGATE (WITH LESS THAN 5% FINES),
   40% COMPOST (MEET REQUIREMENTS IN WAC 173–350–220)
   – TOTAL BIORETENTION SOIL MIX ORGANIC CONTENT SHALL BE 4–8% (BY DRY WEIGHT)
   – BIORETENTION SOIL DEPTH SHALL BE A MINIMUM OF 18–INCHES
   – BIORETENTION SOIL MIX SHALL HAVE A MINIMUM INFILTRATION RATE OF 6"/HR
9. PRESOAK THE PLANTING SOIL PRIOR TO PLANTING VEGETATION TO AID IN SETTLEMENT.
10. COMPLETE FINAL GRADING TO ACHIEVE PROPOSED DESIGN ELEVATIONS. LEAVE SPACE FOR UPPER LAYER OF MULCH AS SPECIFIED ON PLANS.
11. PLANT VEGETATION ACCORDING TO PLANTING PLAN.
12. MULCH AND INSTALL EROSION PROTECTION AT SURFACE FLOW ENTRANCES WHERE NECESSARY UNTIL ENTIRE SITE IS STABILIZED. MULCH MUST BE WOOD CHIPS CONSISTING OF SHREDDED OR CHIPPED HARDWOOD. MULCH SHOULD NOT CONTAIN WEED SEEDS, GRASS CLIPPINGS, AND LARGE CHUNKS OF BARK.
13. CONTRACTOR IS RESPONSIBLE FOR KEEPING BIORETENTION SOIL SEDIMENT FREE AFTER INSTALLATION AND UPON COMPETITION OF CONSTRUCTION, AND ANY SEDIMENT CONTAMINATED BIORETENTION SOIL SHALL BE REMOVED AND REPLACED AT THE CONTRACTORS EXPENSE.

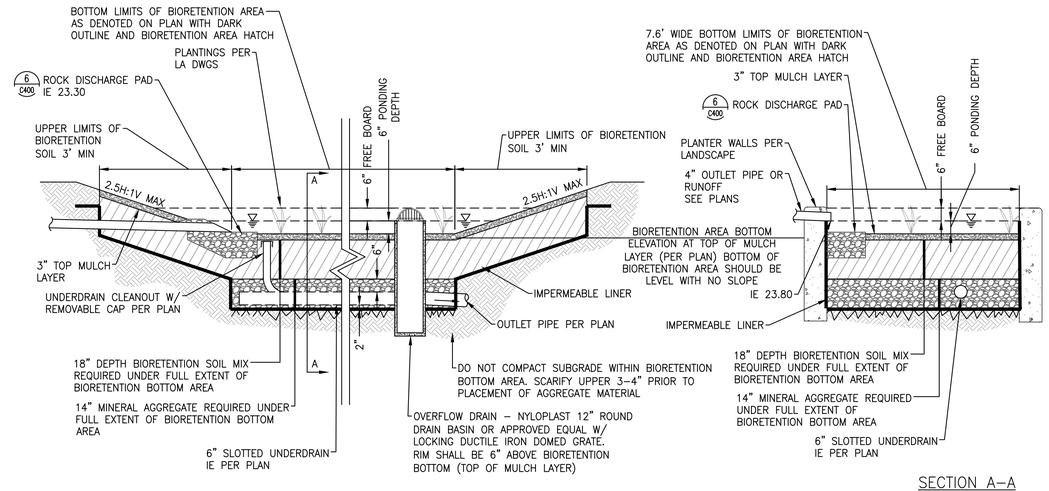

BIORETENTION AREA NTS 3

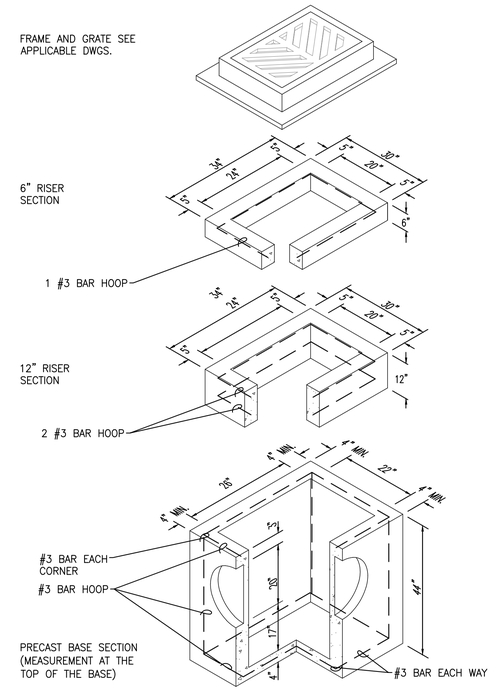

NOTES:
1. CATCH BASINS SHALL BE CONSTRUCTED IN ACCORDANCE WITH ASTM C478 (AASHTO M 199) & C890 UNLESS OTHERWISE SHOWN ON PLANS OR NOTED IN THE WSDOT/APWA STANDARD SPECIFICATIONS.
2. AS AN ACCEPTABLE ALTERNATIVE TO REBAR, WELDED WIRE FABRIC HAVING A MIN. AREA OF 0.12 SQUARE INCHES PER FOOT MAY BE USED. WELDED WIRE FABRIC SHALL COMPLY TO ASTM A497 (AASHTO M 221). WIRE FABRIC SHALL NOT BE PLACED IN KNOCKOUTS.
3. ALL REINFORCED CAST–IN–PLACE CONCRETE SHALL BE CLASS 4000.
4. PRECAST BASES SHALL BE FURNISHED WITH CUTOUTS OR KNOCKOUTS. KNOCKOUTS SHALL HAVE A WALL THICKNESS OF 2" MIN. ALL PIPE SHALL BE INSTALLED IN FACTORY PROVIDED KNOCKOUTS. UNUSED KNOCKOUTS NEED NOT BE GROUTED IF WALL IS LEFT INTACT.
5. ROUND KNOCKOUTS MAY BE ON ALL 4 SIDES, WITH MAX. DIA. OF 20". KNOCKOUTS MAY BE EITHER ROUND OR "D" SHAPE.
6. KNOCKOUT OR CUTOUT HOLE SIZE IS EQUAL TO PIPE OUTER DIA. PLUS CATCH BASIN WALL THICKNESS.
7. THE MAX. DEPTH FROM THE FINISHED GRADE TO THE PIPE INVERT IS 5'–0".
8. THE TAPER ON THE SIDES OF THE PRECAST BASE SECTION AND RISER SECTION SHALL NOT EXCEED 1/2"/FT.
9. CATCH BASIN FRAME AND GRATE SHALL BE IN ACCORDANCE WITH STANDARD SPECIFICATIONS AND MEET THE STRENGTH REQUIREMENTS OF FEDERAL SPECIFICATION RR–F–621D. MATING SURFACES SHALL BE FINISHED TO ASSURE NON–ROCKING FIT WITH ANY COVER POSITION.
10. FRAME AND GRATE MAY BE INSTALLED WITH FLANGE DOWN OR CAST INTO RISER.
11. FOR CATCH BASINS IN PARKING LOTS REFER TO WSDOT STD PLAN B–5.60–01.
12. EDGE OF RISER OR BRICK SHALL NOT BE MORE THAN 2" FROM VERTICAL EDGE OF CATCH BASIN WALL.
13. CATCH BASIN INSTALLATION SHALL BE PER CONTRACT DOCUMENTS AND DETAILS.

CATCH BASIN TYPE 1 NTS 8

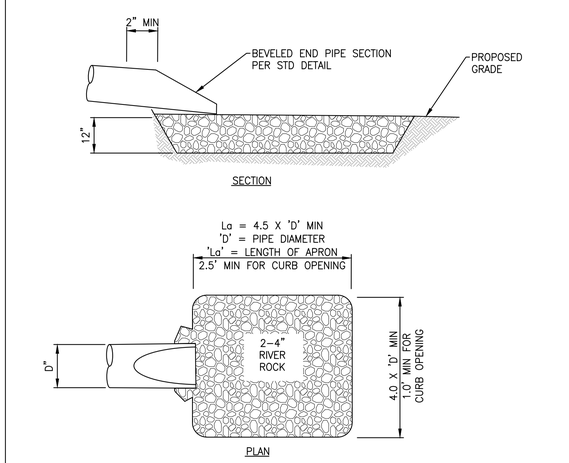

DISCHARGE PAD NTS 6

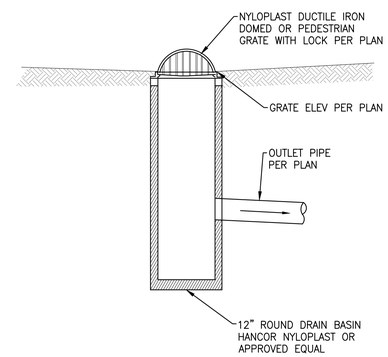

YARD/ OVERFLOW DRAIN NTS 7

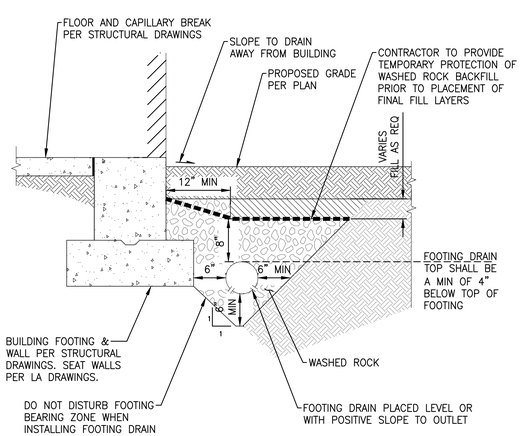

FOOTING DRAIN NTS 9

NOT USED NTS 10

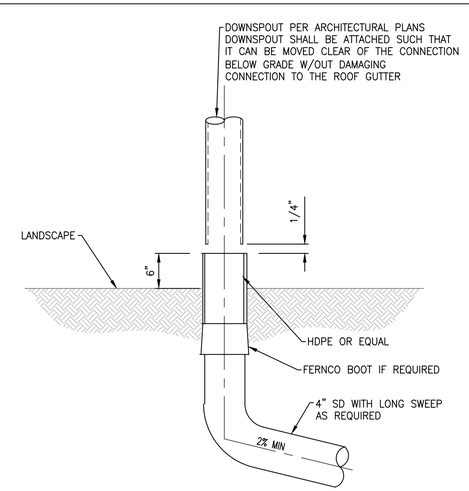

ROOF DOWNSPOUT CONNECTION NTS 11

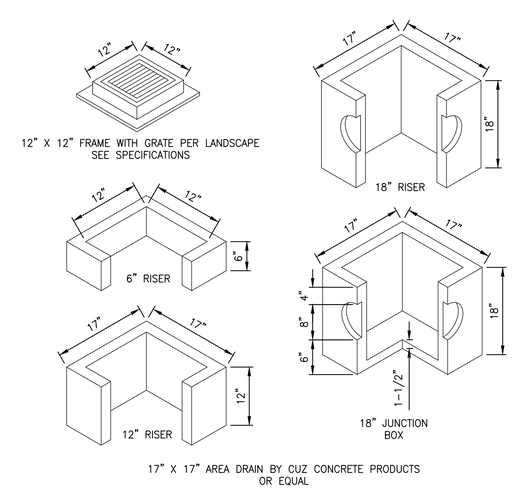

AREA DRAIN NTS 12

MILLER HULL
The Miller Hull Partnership, LLP
Architecture and Planning
Polson Building
71 Columbia, Sixth Floor
Seattle, WA 98104
Phone: 206.682.6837
Contact: Name

LPD engineering pllc
1932 First Ave
Suite 201
Seattle, WA 98101
p. 206.725.1211
f. 206.973.5344
www.lpdengineering.com

STAMP

LAURIE J. PEARL – STATE OF WASHINGTON – 30796 – REGISTERED PROFESSIONAL ENGINEER
2-22-2023

REVIEWED FOR CODE COMPLIANCE
March 27, 2023
SITE COPY
MERCER ISLAND

MERCER ISLAND HOUSE: CASCADE

6838 96TH AVE SE
MERCER ISLAND, WA 98040

SUBMITTAL

100% CONSTRUCTION DOCUMENTS

FEBRUARY 24, 2023

REVISIONS

No.	Description	Date
1	BUILDING PERMIT RESUBMITTAL	10/27/22
2	BUILDING PERMIT RESUBMITTAL 2	01/06/22
3	BUILDING PERMIT RESUBMITTAL 3	02/24/23

Drawn: EVW
Checked: ACW
M|H Proj No.: A20.0085.00
Issue Date: FEBRUARY 24, 2023

SHEET

DETAILS

C400

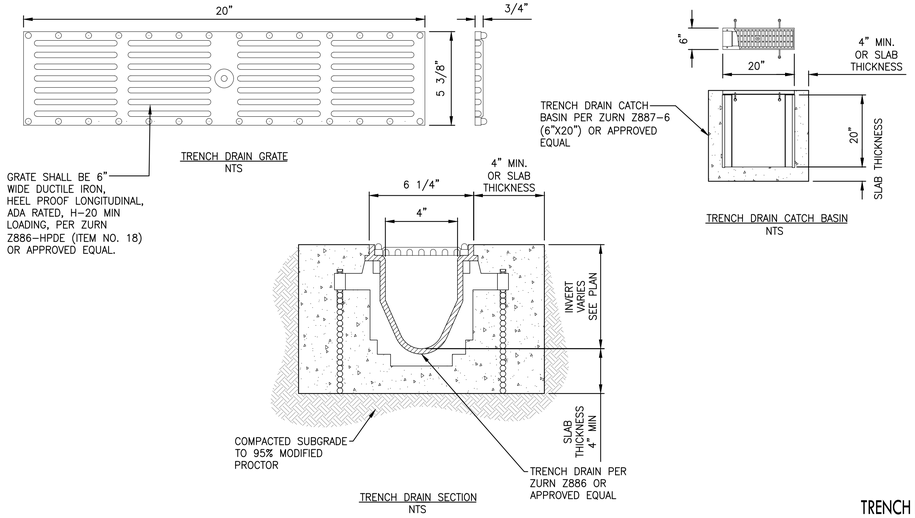

TRENCH DRAIN A NTS 2

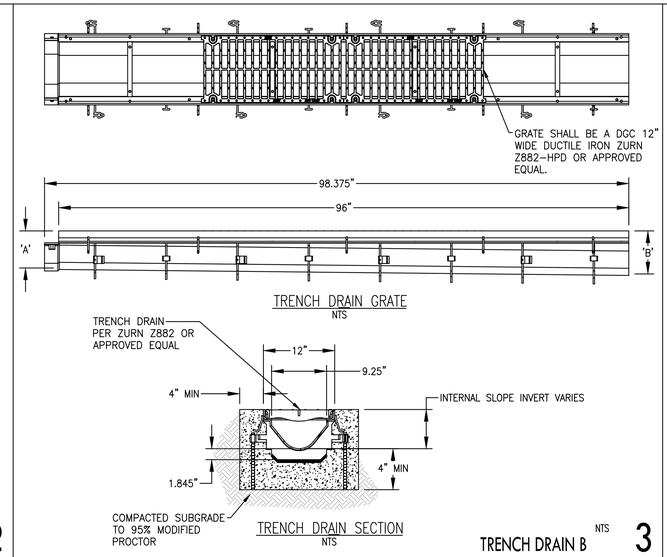

TRENCH DRAIN B NTS 3

MERCER ISLAND UTILITY NOTES

1. ALL STAGING AND STORAGE SHALL OCCUR ON SITE.
2. A REDUCED PRESSURE BACKFLOW ASSEMBLY (RPBA) INSTALLATION SHALL BE REQUIRED AND INSTALLED 12 INCHES ABOVE GRADE BEHIND THE WATER MATER FOR ALL NEW AND DEMO REBUILD SINGLE FAMILY, LAKEFRONT PROJECTS. THE RPBA SHALL BE INSPECTED AT TIME OF INSTALLATION AND AT BUILDING FINAL. (A HOT BOX TO PROTECT THE RPBA ASSEMBLY IS OPTIONAL. A DOUBLE CHECK VALVE ASSEMBLY (DCVA) IS REQUIRED ON ALL FIRE SPRINKLER SYSTEMS.
3. POT HOLING THE PUBLIC UTILITIES IS REQUIRED PRIOR TO ANY GRADING ACTIVITIES LESS THAN 6" OVER THE PUBLIC MAINS (WATER, SEWER AND STORM SYSTEMS). IF THERE IS A CONFLICT, THE APPLICANT IS REQUIRED TO SUBMIT A REVISION FOR APPROVAL PRIOR TO ANY GRADING ACTIVITIES OVER THE PUBLIC MAINS.
4. DO NOT BACKFILL WITH NATIVE MATERIAL ON PUBLIC RIGHT OF WAY. ALL MATERIAL MUST BE IMPORTED.
5. REFER TO WATER SERVICE PERMIT FOR ACTUAL LOCATION OF NEW WATER METER AND SERVICE LINE DETERMINED BY MERCER ISLAND WATER DEPARTMENT.
6. THE EXISTING WATER SERVICE MUST BE ABANDONED AT THE CITY WATER MAIN WHEN A NEW SERVICE IS INSTALLED. THE HOMEOWNER IS RESPONSIBLE FOR ALL COST ASSOCIATED WITH THE ABANDONMENT OF THE EXISTING WATER SERVICE.
7. NO ADS FLEXIBLE PIPE SHALL BE ALLOWED.
8. SAND COLLARS ARE REQUIRED FOR GROUTING PVC PIPE TO CONCRETE STRUCTURES. THIS ALSO APPLIES TO ADS N-12 PIPES AND HDPE PIPES.
9. OWNER SHALL CONTROL DISCHARGE OF SURFACE DRAINAGE RUNOFF FROM EXISTING AND NEW IMPERVIOUS AREAS IN A RESPONSIBLE MANNER. CONSTRUCTION OF NEW GUTTERS AND DOWNSPOUTS, DRY WELLS, LEVEL SPREADERS OR DOWNSTREAM CONVEYANCE PIPE MAY BE NECESSARY TO MINIMIZE DRAINAGE IMPACT TO YOUR NEIGHBORS. CONSTRUCTION OF MINIMUM DRAINAGE IMPROVEMENTS SHOWN OR CALLED OUT ON THE PLAN DOES NOT IMPLY RELIEF FROM CIVIL LIABILITY FOR YOUR DOWNSTREAM DRAINAGE.
10. THE CONTRACTOR MUST POT HOLE ALL UTILITIES PRIOR TO MAKING CONNECTIONS TO VERIFY MATERIAL, DIAMETER, ALIGNMENTS, ETC. PRIOR TO MAKING CONNECTIONS, CONTRACTOR SHALL HAVE ALL NECESSARY PARTS, MATERIALS AND EQUIPMENT ON SITE. CONTACT SITE & UTILITIES INSPECTOR TO VERIFY.
11. CATCH BASIN FILTERS SHOULD BE PROVIDED FOR ALL STORM DRAIN CATCH BASINS/INLETS DOWNSLOPE AND WITHIN 500 FEET OF THE CONSTRUCTION AREA. CATCH BASIN FILTERS SHOULD BE DESIGNED BY THE MANUFACTURER FOR USE AT CONSTRUCTION SITES AND APPROVED BY THE CITY INSPECTOR. CATCH BASIN FILTERS SHOULD BE INSPECTED FREQUENTLY, ESPECIALLY AFTER STORM EVENTS. IF THE FILTER BECOMES CLOGGED, IT SHOULD BE CLEANED OR REPLACED.
12. THE TV INSPECTION OF THE EXISTING SIDE SEWER TO THE CITY SEWER MAIN IS REQUIRED. IF THE RESULT OF THE TV INSPECTION IS NOT IN SATISFACTORY CONDITION BY THE CITY OF MERCER ISLAND INSPECTOR, THE REPLACEMENT OF THE EXISTING SIDE SEWER IS REQUIRED.
13. INFORM THE MERCER ISLAND CITY SITE/UTILITY INSPECTOR AT 206.275-7714 OF THE ANTICIPATED START DATE OF IN-WATER WORK PRIOR TO COMMENCEMENT OF CONSTRUCTION.
14. FIELD LOCATE THE SEWER MAIN (LAKELINE) UNDERLYING THE LAKEBED AND MARK CLEARLY PRIOR TO THE START OF CONSTRUCTION. CONTACT THE MERCER ISLAND SITE/UTILITY INSPECTOR AT 206.275-7714 FOR AVAILABLE INFORMATION ABOUT THE LAKELINE AND ASSISTANCE WHERE POSSIBLE WITH IDENTIFYING THE GENERAL LOCATION OF THE LAKELINE PRIOR TO CONSTRUCTION. GIS MAPPING MAY BE AVAILABLE BY CALLING 206.236-3471. THE APPLICANT SHALL BE RESPONSIBLE OF ANY DAMAGE TO SAID SEWER MAIN RESULTING FROM CONSTRUCTION.

UTILITY NOTES NTS 8

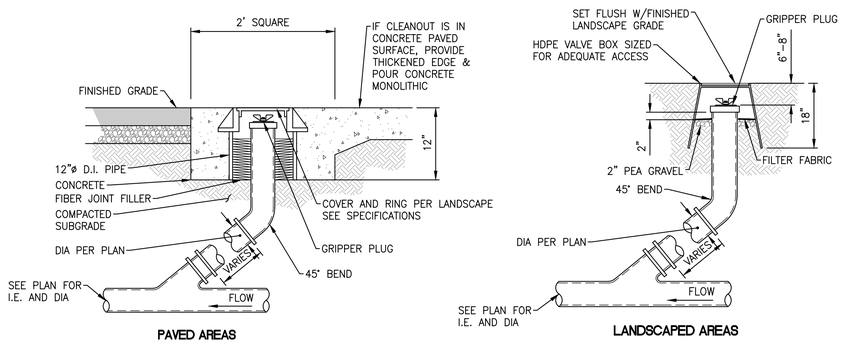

CLEANOUT NTS 6

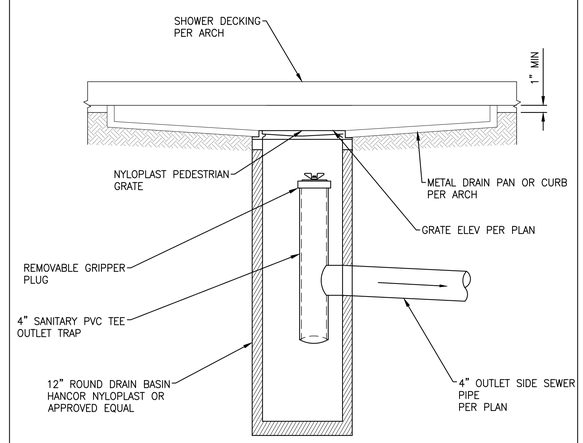

SHOWER AREA DRAIN NTS 7

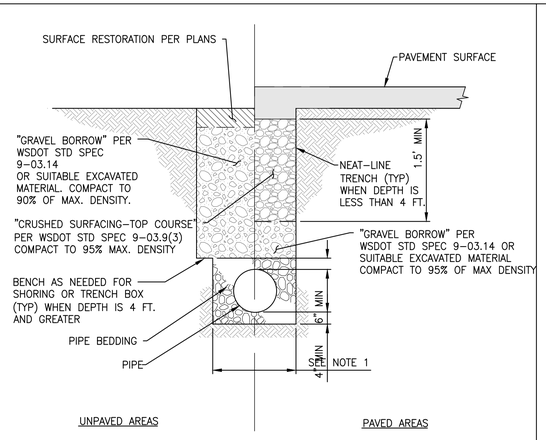

NOTE:

1. MAXIMUM WIDTH OF TRENCH AT TOP OF PIPE
   * 30" FOR PIPE UP TO AND INCLUDING 12" NOMINAL DIAMETER.

PIPE BEDDING NTS 9

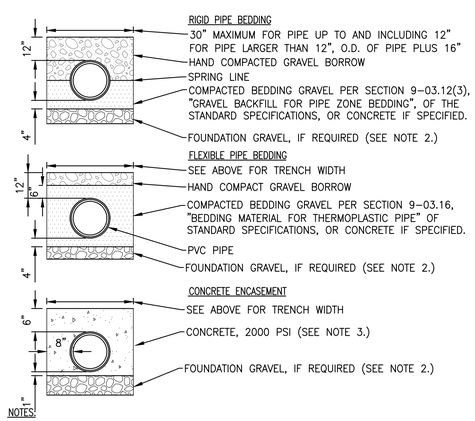

NOTES:

1. COMPACTED CRUSHED SURFACING TOP COURSE PER SECTION 9-03.9(3), "CRUSHED SURFACING", OF THE STANDARD SPECIFICATIONS CAN ALSO BE USED AS BEDDING GRAVEL.
2. EXCAVATE UNSTABLE MATERIAL DOWN TO FIRM SOIL AND REPLACE WITH FOUNDATION GRAVEL PER SECTION 9-03.9(1), "BALLAST", OF THE STANDARD SPECIFICATIONS
3. THE CONTRACTOR SHALL BE RESPONSIBLE FOR ANCHORING PIPE TO PREVENT FLOTATION DURING CONCRETE PLACEMENT.

PIPE TRENCH NTS 10

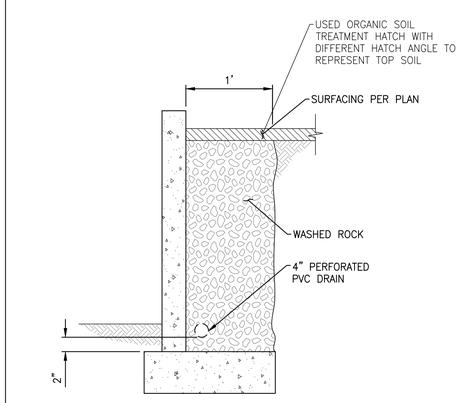

NOTES:

1. SEE STRUCTURAL PLANS FOR RETAINING WALL DESIGN.
2. SEE LANDSCAPE PLANS FOR SEAT/PLANTER WALLS.

TYPICAL WALL DRAIN NTS 11

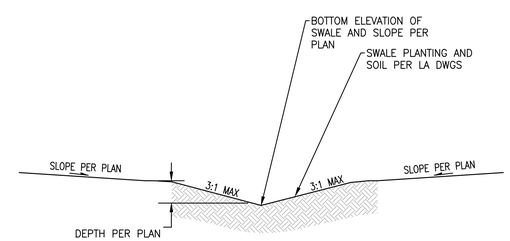

LANDSCAPE DRAINAGE SWALE NTS 12

MILLER HULL
The Miller Hull Partnership, LLP
Architecture and Planning
Polson Building
71 Columbia, Sixth Floor
Seattle, WA 98104

Phone: 206.682.6837
Contact: Name

LPD engineering pllc
1932 First Ave
Suite 201
Seattle, WA 98101
p. 206.725.1211
f. 206.973.5344
www.lpdengineering.com

STAMP

MERCER ISLAND HOUSE: CASCADE

6838 96TH AVE SE
MERCER ISLAND, WA 98040

SUBMITTAL

100% CONSTRUCTION DOCUMENTS

FEBRUARY 24, 2023

REVISIONS

No.	Description	Date
1	BUILDING PERMIT RESUBMITTAL	10/27/22
2	BUILDING PERMIT RESUBMITTAL 2	01/06/22
3	BUILDING PERMIT RESUBMITTAL 3	02/24/23

Drawn: EVW
Checked: ACW
M|H Proj No.: A20.0085.00
Issue Date: FEBRUARY 24, 2023

SHEET

DETAILS

C401

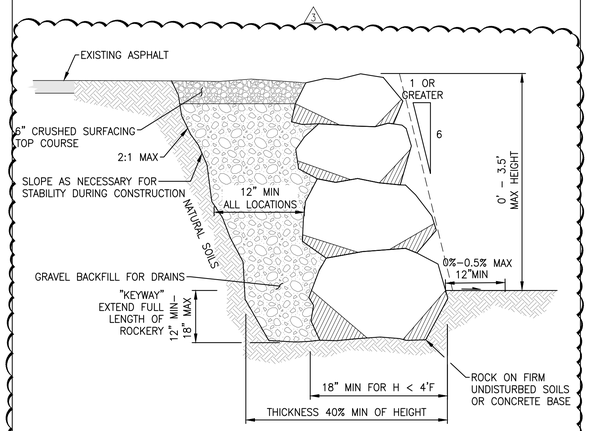

NTS
ROCKERY 1

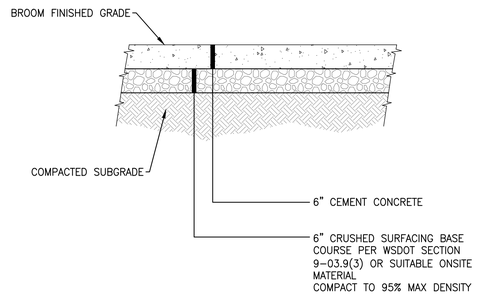

NTS
CONCRETE PAVEMENT 2

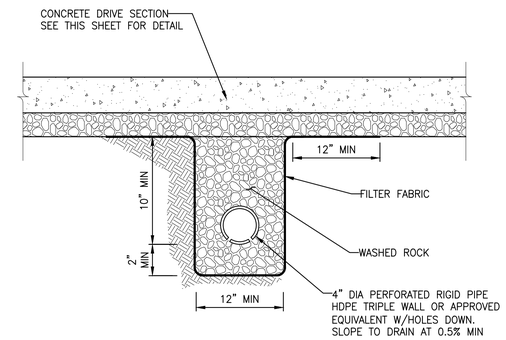

NTS
SUBSURFACE DRAIN 3

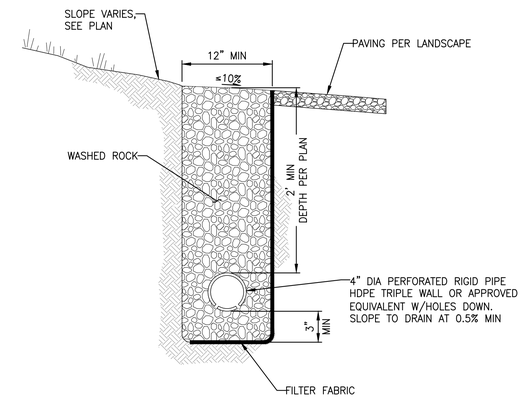

NTS
FRENCH DRAIN 4

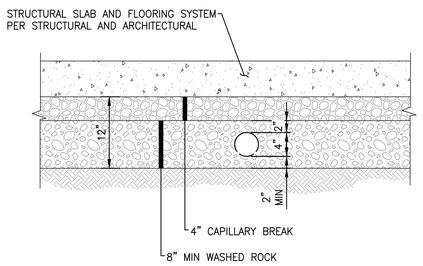

NTS
SUB-SLAB DRAINAGE 5

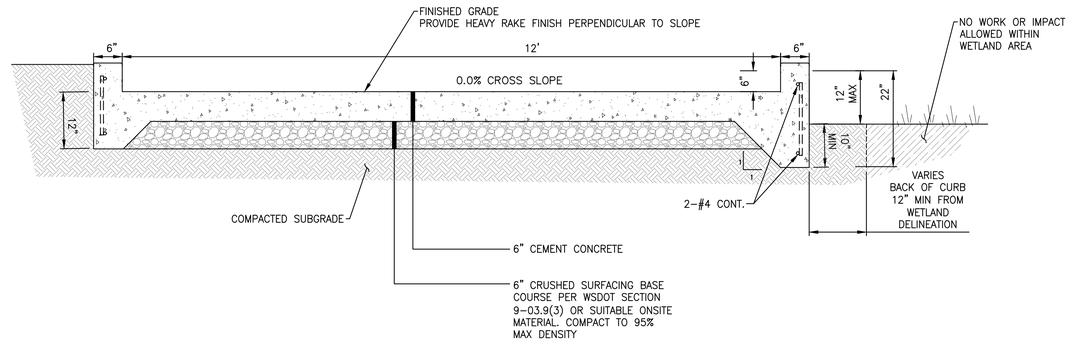

NTS
CONCRETE DRIVE 7

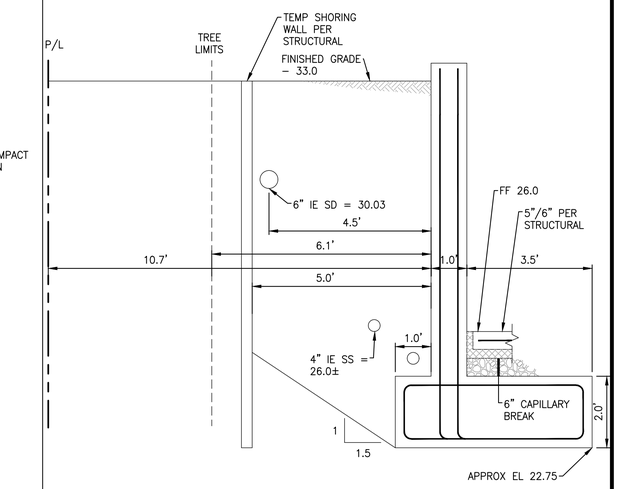

1" = 20'
SECTION A 8

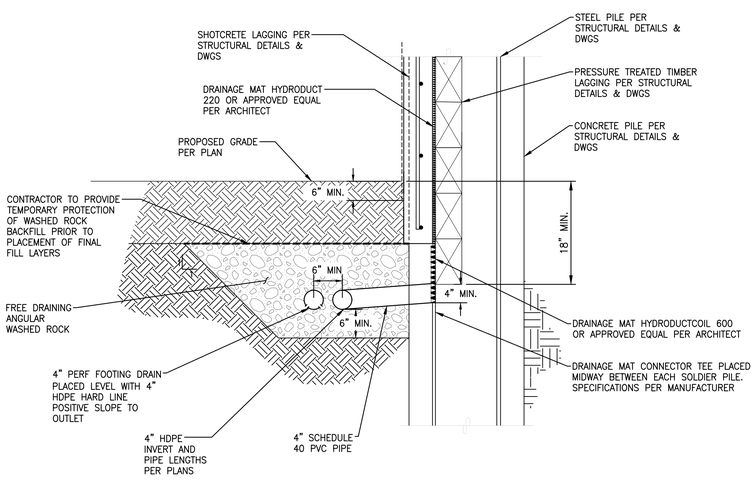

NTS
SOLDIER PILE RETAINING WALL FOOTING DRAIN 9

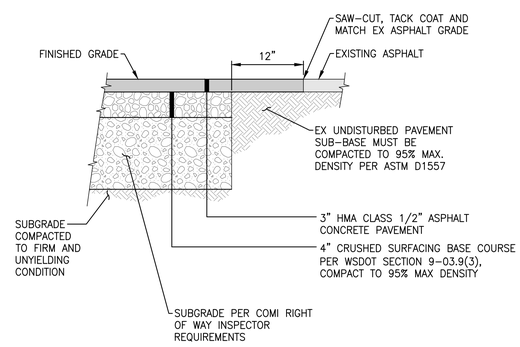

NOTES:

1. IF EX PAVEMENT SECTION IS THICKER, MATCH EX SECTION. OTHERWISE CONSTRUCT SECTION SHOWN.
2. SAW–CUT FULL DEPTH WHERE NEW PAVEMENT ABUTS EXISTING AND APPLY TACK COAT.
3. PLACE ASPHALT IN ACCORDANCE WITH WSDOT APWA SECTION 5–04.
4. PROOF ROLL AND REMOVE ANY SOFT SPOTS. REPLACE REMOVED MATERIAL WITH GRAVEL BORROW. CONTRACTOR SHALL TEST AND VERIFY SUBGRADE MEETS COMPACTION REQUIREMENTS PRIOR TO PAVING.

NTS
ASPHALT PAVEMENT 11

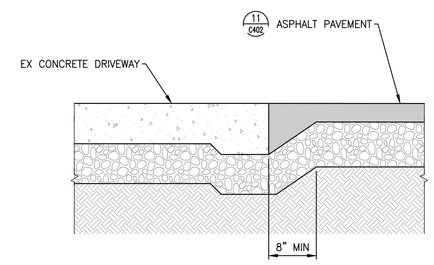

NTS
ASPHALT-CONCRETE TRANSITION 12

MILLER HULL
The Miller Hull Partnership, LLP
Architecture and Planning
Polson Building
71 Columbia, Sixth Floor
Seattle, WA 98104

Phone: 206.682.6837
Contact: Name

LPD engineering pllc
1932 First Ave
Suite 201
Seattle, WA 98101
p. 206.725.1211
f. 206.973.5344
www.lpdengineering.com

STAMP

LAURIE J. PEARL – STATE OF WASHINGTON – 30762 – REGISTERED PROFESSIONAL ENGINEER
2-22-2023

MERCER ISLAND – REVIEWED FOR CODE COMPLIANCE – March 27, 2023 – SITE COPY

MERCER ISLAND HOUSE: CASCADE

6838 96TH AVE SE
MERCER ISLAND, WA 98040

SUBMITTAL

100% CONSTRUCTION DOCUMENTS

FEBRUARY 24, 2023

REVISIONS

No.	Description	Date
1	BUILDING PERMIT RESUBMITTAL	10/27/22
2	BUILDING PERMIT RESUBMITTAL 2	01/06/22
3	BUILDING PERMIT RESUBMITTAL 3	02/24/23

Drawn: EVW
Checked: ACW
M|H Proj No.: A20.0085.00
Issue Date: FEBRUARY 24, 2023

SHEET

DETAILS

C402

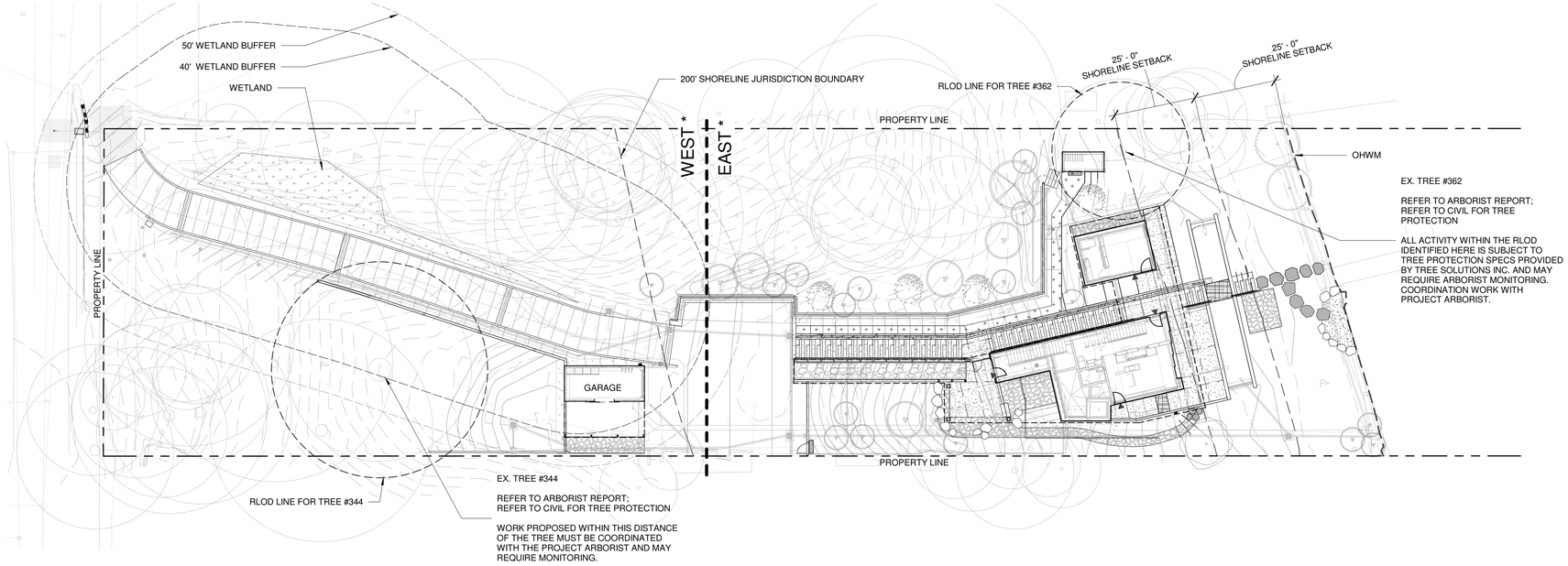

1 COMPOSITE SITE PLAN
1" = 20'-0"

NORTH

0' 20' 40'
SCALE: 1" = 20'-0"

MILLER HULL
The Miller Hull Partnership, LLP
Architecture and Planning
Polson Building
71 Columbia, Sixth Floor
Seattle, WA 98104
Phone: 206.682.6837
Contact: Name

PARTNERSHIP berger

STAMP

STATE OF WASHINGTON
JONATHAN D. MORLEY
NO. 736 EXP. 2/21/2023
LANDSCAPE ARCHITECT

MERCER ISLAND
REVIEWED FOR CODE COMPLIANCE
March 27, 2023
SITE COPY
BUILDING

MERCER ISLAND HOUSE: CASCADE

6838 96th Ave SE
Mercer Island, WA 90840

SUBMITTAL

100% CONSTRUCTION DOCUMENTS

FEBRUARY 24, 2023

REVISIONS

No.	Description	Date

Drawn: JM / SL / CA / SM
Checked: JM / SL / CA
M|H Proj No.: A20.0085.00

Issue Date: FEBRUARY 24, 2023

SHEET

COMPOSITE SITE PLAN

L100

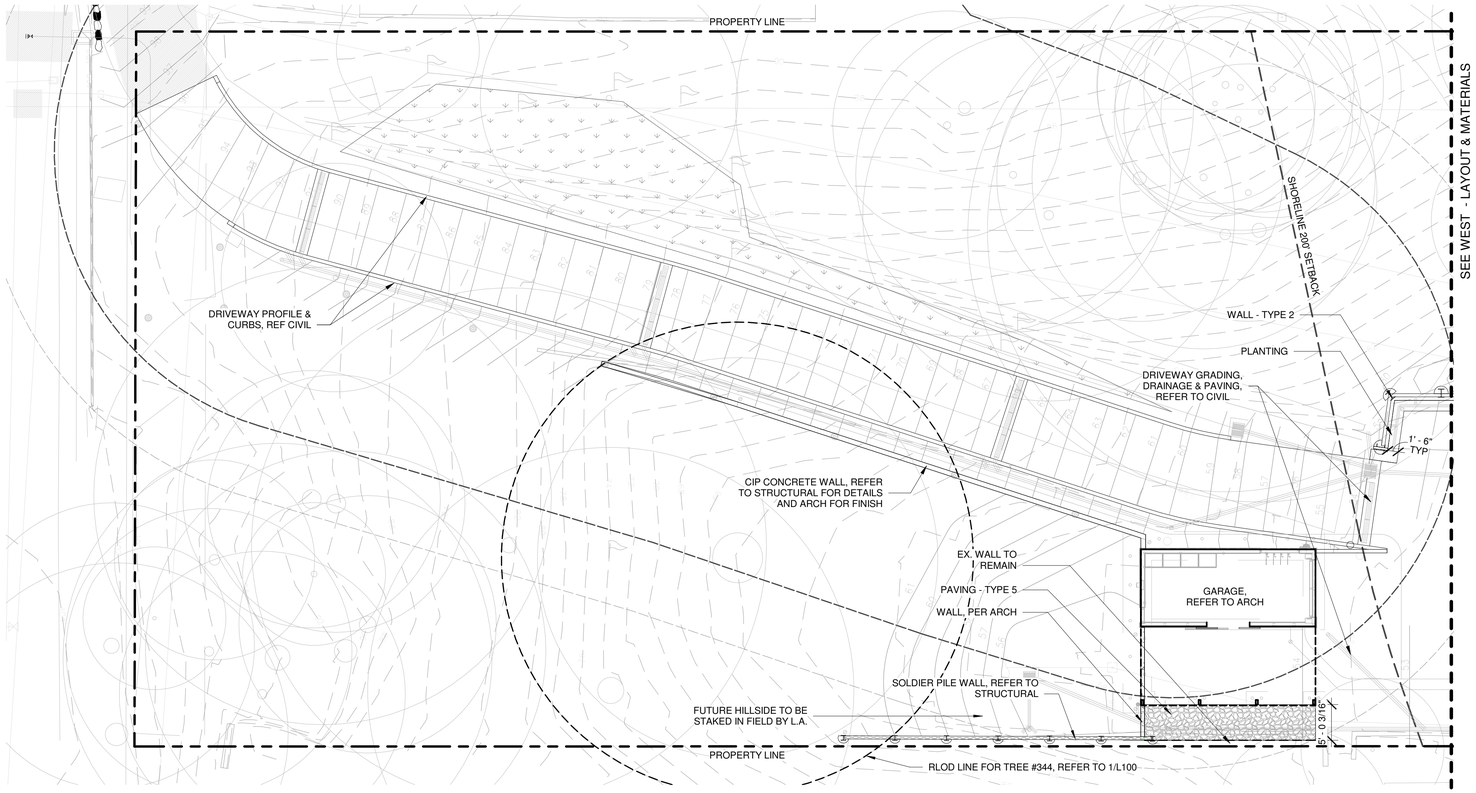

1 WEST - LAYOUT & MATERIALS
1" = 10'-0"

MATERIAL LEGEND:

- PAVING - TYPE 1
- PAVING - TYPE 2
- PAVING - TYPE 3
- PAVING - TYPE 4
- PAVING - TYPE 5
- WALL - TYPE 1
- WALL - TYPE 2
- WALL - TYPE 3
- STEPS - TYPE 1 & 1-B
- STEPS - TYPE 2
- STEPS - TYPE 3
- STEPS - TYPE 4
- METAL EDGING
- TRENCH DRAIN
- ROCK MULCH
- BOULDERS

GENERAL LAYOUT NOTES:

1. REFER TO CIVIL GRADING PLANS FOR ALL TOP OF WALL, BOTTOM OF WALL, TOP OF STEP, AND BOTTOM OF STEP ELEVATIONS.

MATERIAL NOTES:

PAVING
TYPE 1 - CIP CONCRETE VEHICULAR PAVING, SEE DETAILS AND REFER TO SPEC SECTION 03 30 00.

TYPE 2 - CIP CONCRETE PEDESTRIAN PAVING, SEE DETAILS AND REFER TO SPEC SECTION 03 30 00.

TYPE 3 - REINFORCED TURF PAVEMENT SYSTEM, REFER TO SPEC SECTION 32 14 00.

TYPE 4 - METAL GRATING, SEE DETAILS & REFER TO SPEC SECTION 32 94 43.

TYPE 5 - CRUSHED ROCK, SEE DETAILS & REFER TO SPEC SECTION 32 15 40.

WALLS
TYPE 1 - CIP CONCRETE WALLS, WITH ARCHITECTURAL CONCRETE, SEE DETAILS & REFER TO SPEC SECTION 03 30 10.

TYPE 2 - SOLDIER PILE RETAINING WALL WITH SHOTCRETE FACE, REFER TO STRUCTURAL AND CIVIL. FOR SHOTCRETE WALL FINISH, REFER TO SPEC SECTION 03 30 10. FOR VERTICAL SCORING PATTERN, SEE DETAIL 2/L407.

TYPE 3 - STEEL PLANTER WALL, PAINTED FINISH, REFER TO SPEC SECTION 05 50 00.

STEPS
TYPE 1 - CIP CONCRETE SPINE STAIRS, SEE DETAILS & REFER TO SPEC SECTION 03 30 00.

TYPE 1-B - CIP CONCRETE SPINE STAIRS, SEE DETAILS & REFER TO SPEC SECTION 03 30 00.

TYPE 2 - CIP CONCRETE STAIR WITH ARCHITECTURAL FINISH. SEE DETAILS & REFER TO SPEC SECTION 03 30 00.

TYPE 3 - PAINTED STEEL RISER (3/8" THICK) IN CRUSHED ROCK, SEE DETAILS & REFER TO SPEC SECTION 05 50 00.

TYPE 4 - STONE SLAB STEPS, REFER TO DETAIL AND SPEC SECTION 04 41 00.

HANDRAIL
SEE ARCH

RUNNEL
CIP CONCRETE SIDEWALLS AND BASE WITH PAINTED STEEL V-CHANNEL, REFER TO DETAILS & SPEC SECTION 05 50 00.

METAL EDGING
BLACK COLMET, POWDER-COATED STEEL EDGING, OR SIMILAR, TO BE APPROVED BY L.A., 1/4" THICKNESS, 4" DEPTH (HOLD FLUSH WITH FIGURE GRADES)

TRENCH GRATE
DECORATIVE TRENCH GRATE, SEE SPEC SECTION 32 94 43.

ROCK MULCH
3-5" WASHED, ROUNDED RIVER ROCK, SEE SPEC SECTION 07 55 63.

BOULDERS
2-4 MAN, SALVAGED ON-SITE, REF TO SPEC SECTION 04 41 00.

PLANTING
SEE SHEET L601; SEE SPEC SECTION 32 90 00.

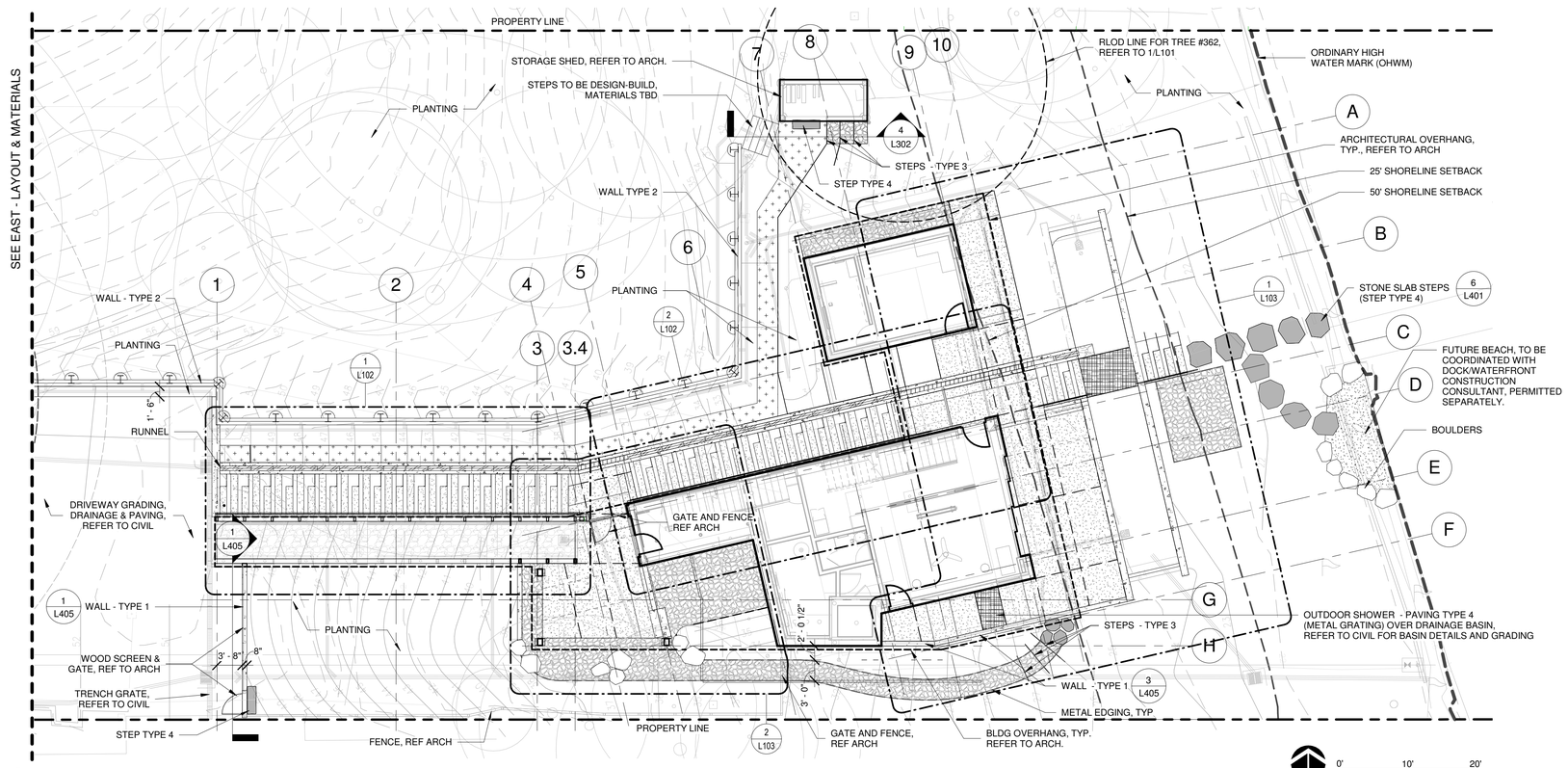

2 EAST - LAYOUT & MATERIALS
1" = 10'-0"

MILLER HULL
The Miller Hull Partnership, LLP
Architecture and Planning
Polson Building
71 Columbia, Sixth Floor
Seattle, WA 98104

Phone: 206.682.6837
Contact: Name

PARTNERSHIP berger

STAMP

STATE OF WASHINGTON
JONATHAN D. MORLEY
NO. 736 EXP. 2/21/2023
LANDSCAPE ARCHITECT

MERCER ISLAND
REVIEWED FOR CODE COMPLIANCE
March 27, 2023
SITE COPY
BUILDING

MERCER ISLAND HOUSE: CASCADE

6838 96th Ave SE
Mercer Island, WA 90840

SUBMITTAL

100% CONSTRUCTION DOCUMENTS

FEBRUARY 24, 2023

REVISIONS

No.	Description	Date

Drawn: JM / SL / CA / SM
Checked: JM / SL / CA
M|H Proj No.: A20.0085.00

Issue Date: FEBRUARY 24, 2023

SHEET

LAYOUT & MATERIAL PLAN

L101

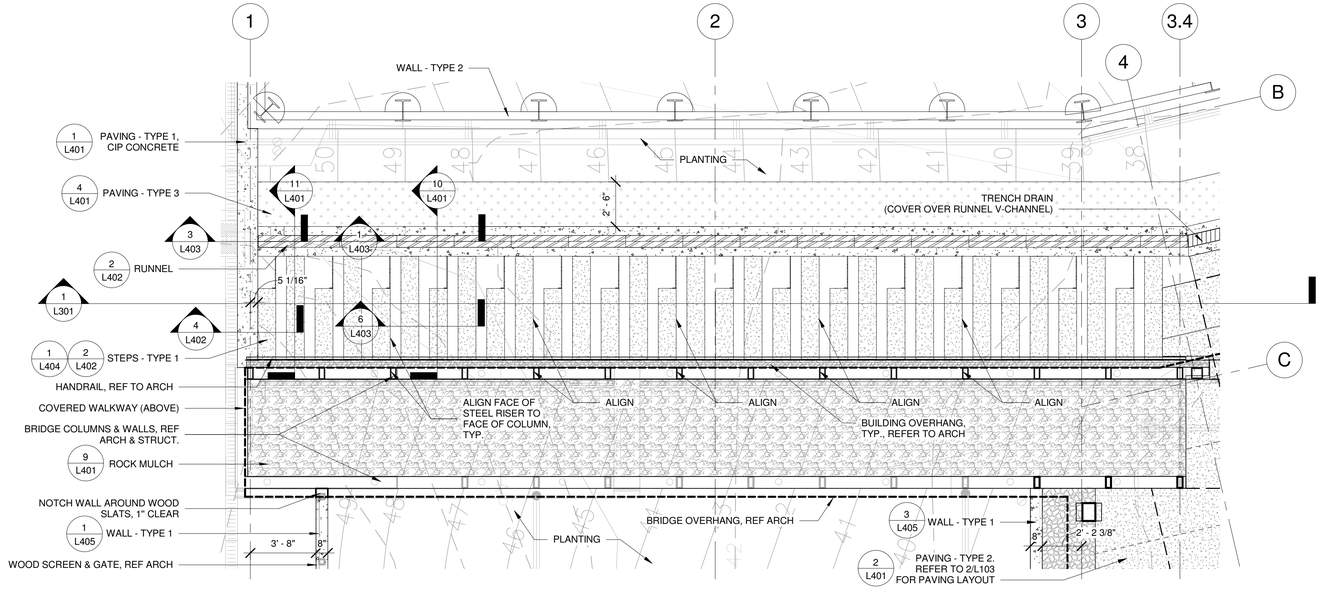

1 ENLARGEMENT - WEST SPINE

1/4" = 1'-0"

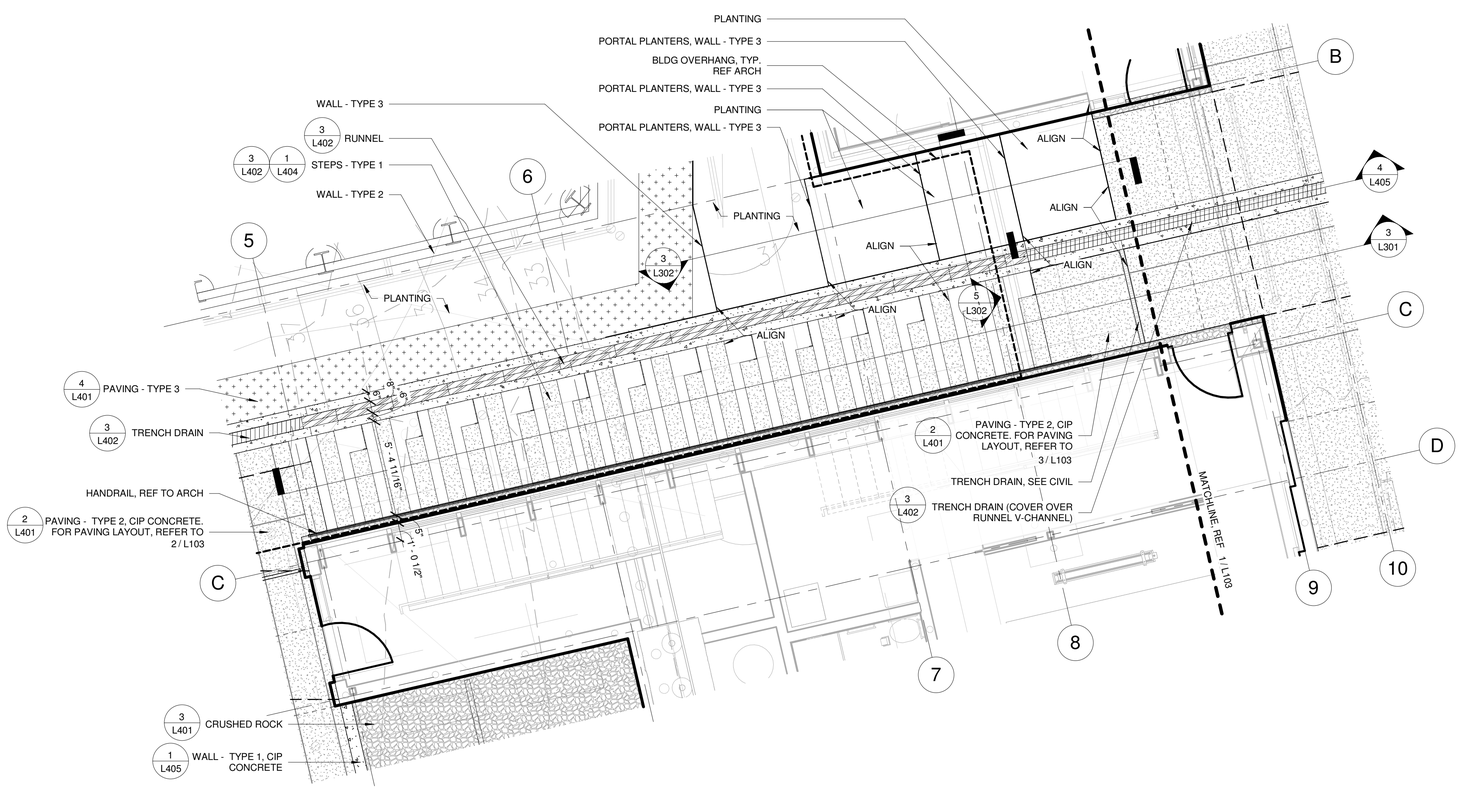

2 ENLARGEMENT - EAST SPINE

1/4" = 1'-0"

MATERIAL LEGEND:

- PAVING - TYPE 1
- PAVING - TYPE 2
- PAVING - TYPE 3
- PAVING - TYPE 4
- PAVING - TYPE 5
- WALL - TYPE 1
- WALL - TYPE 2
- WALL - TYPE 3
- STEPS - TYPE 1 & 1-B
- STEPS - TYPE 2
- STEPS - TYPE 3
- METAL EDGING
- TRENCH DRAIN
- ROCK MULCH
- BOULDERS

JOINTING LEGEND

- CONTROL JOINT
- EXPANSION JOINT
- SCORE JOINT

FOR JOINTING DETAILS, REF 8 / L401

MATERIAL NOTES:

PAVING
TYPE 1 - CIP CONCRETE VEHICULAR PAVING, SEE DETAILS AND REFER TO SPEC SECTION 03 30 00.

TYPE 2 - CIP CONCRETE PEDESTRIAN PAVING, SEE DETAILS AND REFER TO SPEC SECTION 03 30 00.

TYPE 3 - REINFORCED TURF PAVEMENT SYSTEM, REFER TO SPEC SECTION 32 14 00.

TYPE 4 - METAL GRATING, SEE DETAILS & REFER TO SPEC SECTION 32 94 43.

TYPE 5 - CRUSHED ROCK, SEE DETAILS & REFER TO SPEC SECTION 32 15 40.

WALLS
TYPE 1 - CIP CONCRETE WALLS, WITH ARCHITECTURAL CONCRETE, SEE DETAILS & REFER TO SPEC SECTION 03 30 10.

TYPE 2 - SOLDIER PILE RETAINING WALL WITH SHOTCRETE FACE, REFER TO STRUCTURAL AND CIVIL. FOR SHOTCRETE WALL FINISH, REFER TO SPEC SECTION 03 30 10. FOR VERTICAL SCORING PATTERN, SEE DETAIL 2/L407.

TYPE 3 - STEEL PLANTER WALL, PAINTED FINISH, REFER TO SPEC SECTION 05 50 00.

STEPS
TYPE 1 - CIP CONCRETE SPINE STAIRS, SEE DETAILS & REFER TO SPEC SECTION 03 30 00.

TYPE 1-B - CIP CONCRETE SPINE STAIRS, SEE DETAILS & REFER TO SPEC SECTION 03 30 00.

TYPE 2 - CIP CONCRETE STAIR WITH ARCHITECTURAL FINISH. SEE DETAILS & REFER TO SPEC SECTION 03 30 00.

TYPE 3 - PAINTED STEEL RISER (3/8" THICK) IN CRUSHED ROCK, SEE DETAILS & REFER TO SPEC SECTION 05 50 00.

TYPE 4 - STONE SLAB STEPS, REFER TO DETAIL AND SPEC SECTION 04 41 00.

HANDRAIL
SEE ARCH

RUNNEL
CIP CONCRETE SIDEWALLS AND BASE WITH PAINTED STEEL V-CHANNEL, REFER TO DETAILS & SPEC SECTION 05 50 00.

METAL EDGING
BLACK COLMET, POWDER-COATED STEEL EDGING, OR SIMILAR. TO BE APPROVED BY L.A., 1/4" THICKNESS, 4" DEPTH (HOLD FLUSH WITH FIGURE GRADES)

TRENCH GRATE
DECORATIVE TRENCH GRATE, SEE SPEC SECTION 32 94 43.

ROCK MULCH
3-5" WASHED, ROUNDED RIVER ROCK, SEE SPEC SECTION 07 55 63.

BOULDERS
2-4 MAN, SALVAGED ON-SITE, REF TO SPEC SECTION 04 41 00.

PLANTING
SEE SHEET L601; SEE SPEC SECTION 32 90 00.

MILLER HULL
The Miller Hull Partnership, LLP
Architecture and Planning
Polson Building
71 Columbia, Sixth Floor
Seattle, WA 98104

Phone: 206.682.6837
Contact: Name

PARTNERSHIP berger

STAMP

STATE OF WASHINGTON
JONATHAN D. MORLEY
NO. 736 EXP. 2/21/2023
LANDSCAPE ARCHITECT

MERCER ISLAND
REVIEWED FOR CODE COMPLIANCE
March 27, 2023
SITE COPY
PLANNING

MERCER ISLAND HOUSE: CASCADE

6838 96th Ave SE
Mercer Island, WA 90840

SUBMITTAL

100% CONSTRUCTION DOCUMENTS

FEBRUARY 24, 2023

REVISIONS

No.	Description	Date

Drawn: JM / SL / CA / SM
Checked: JM / SL / CA
M|H Proj No.: A20.0085.00

Issue Date: FEBRUARY 24, 2023

SHEET

LANDSCAPE ENLARGEMENTS

L102

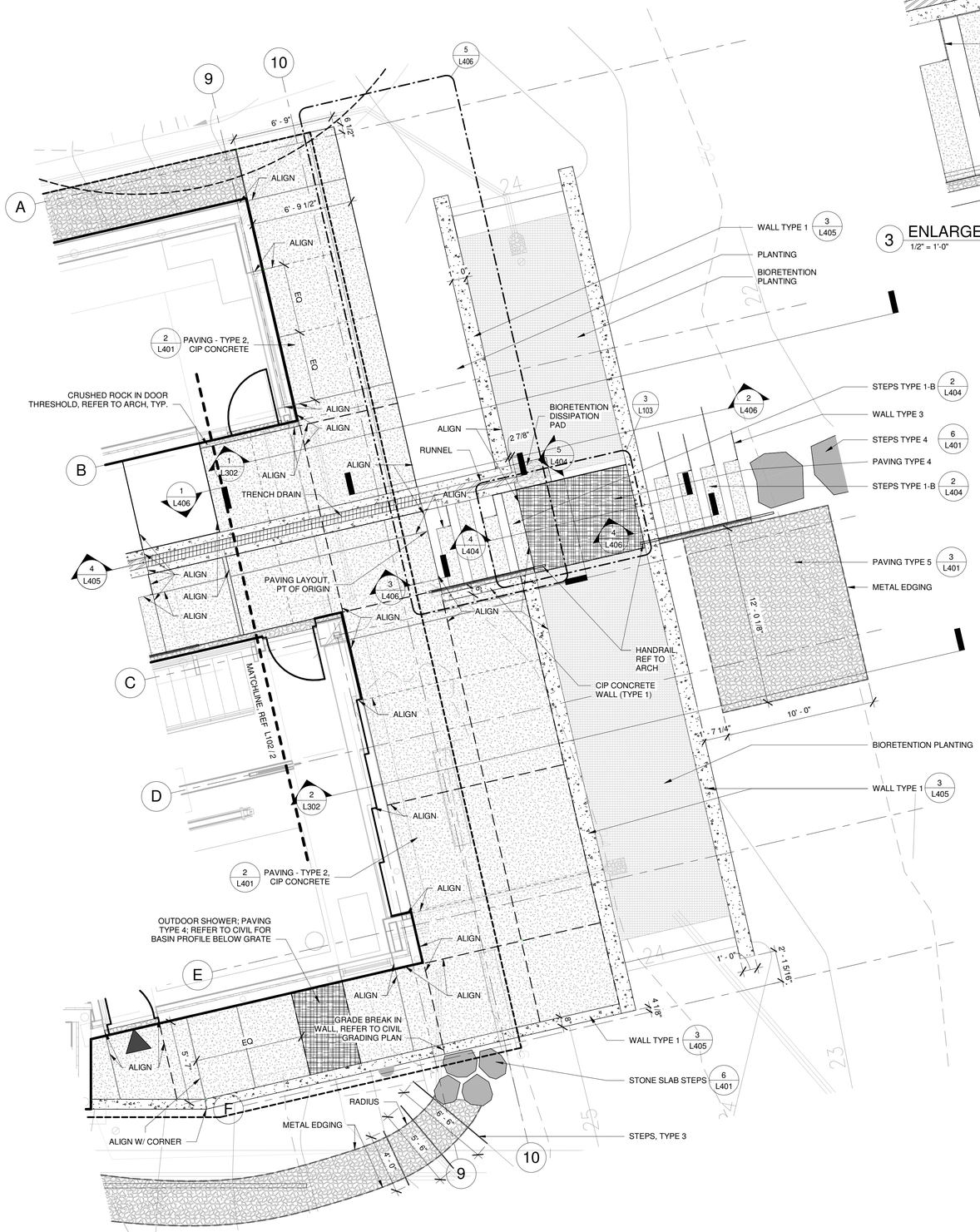

1 ENLARGEMENT - LAKESIDE
1/4" = 1'-0"

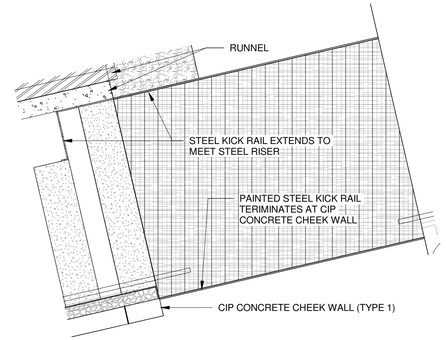

3 ENLARGEMENT - LAKESIDE BRIDGE
1/2" = 1'-0"

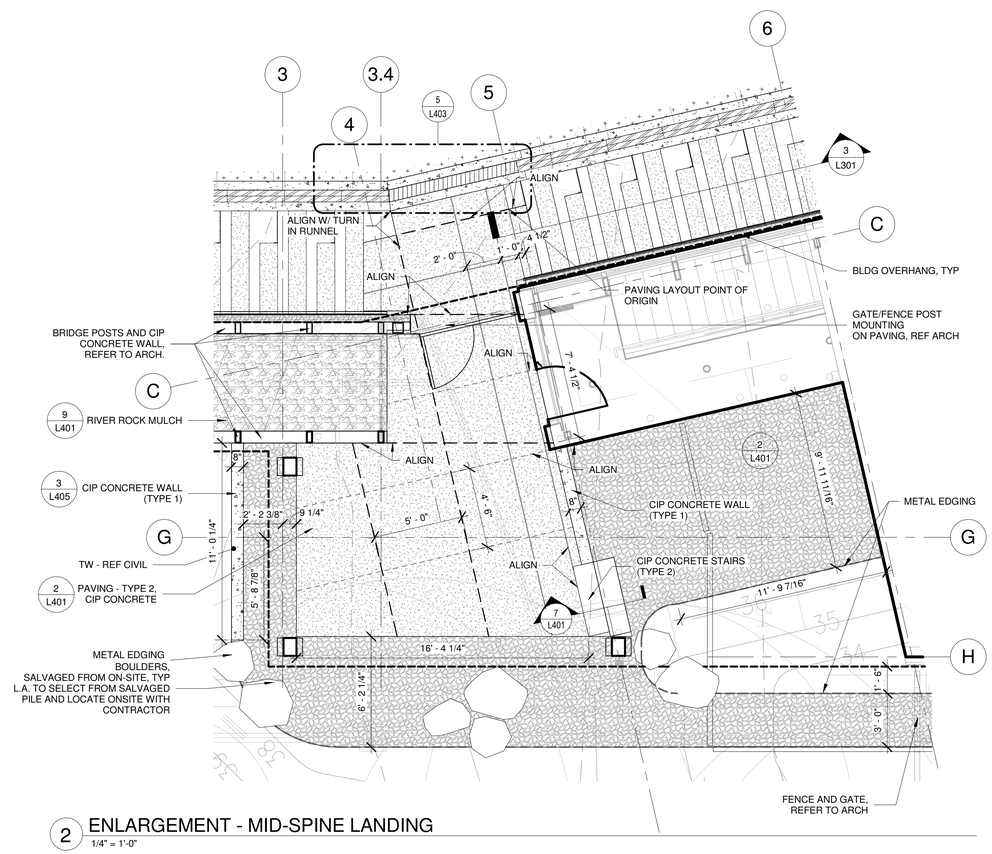

2 ENLARGEMENT - MID-SPINE LANDING
1/4" = 1'-0"

MATERIAL LEGEND:

- PAVING - TYPE 1
- PAVING - TYPE 2
- PAVING - TYPE 3
- PAVING - TYPE 4
- PAVING - TYPE 5
- WALL - TYPE 1
- WALL - TYPE 2
- WALL - TYPE 3
- STEPS - TYPE 1 & 1-B
- STEPS - TYPE 2
- STEPS - TYPE 3
- METAL EDGING
- TRENCH DRAIN
- ROCK MULCH
- BOULDERS

JOINTING LEGEND

- CONTROL JOINT
- EXPANSION JOINT
- SCORE JOINT

FOR JOINTING DETAILS, REF 8 / L401

MATERIAL NOTES:

PAVING
TYPE 1 - CIP CONCRETE VEHICULAR PAVING, SEE DETAILS AND REFER TO SPEC SECTION 03 30 00.

TYPE 2 - CIP CONCRETE PEDESTRIAN PAVING, SEE DETAILS AND REFER TO SPEC SECTION 03 30 00.

TYPE 3 - REINFORCED TURF PAVEMENT SYSTEM, REFER TO SPEC SECTION 32 14 00.

TYPE 4 - METAL GRATING, SEE DETAILS & REFER TO SPEC SECTION 32 94 43.

TYPE 5 - CRUSHED ROCK, SEE DETAILS & REFER TO SPEC SECTION 32 15 40.

WALLS
TYPE 1 - CIP CONCRETE WALLS, WITH ARCHITECTURAL CONCRETE, SEE DETAILS & REFER TO SPEC SECTION 03 30 10.

TYPE 2 - SOLDIER PILE RETAINING WALL WITH SHOTCRETE FACE, REFER TO STRUCTURAL AND CIVIL. FOR SHOTCRETE WALL FINISH, REFER TO SPEC SECTION 03 30 10. FOR VERTICAL SCORING PATTERN, SEE DETAIL 2/L407.

TYPE 3 - STEEL PLANTER WALL, PAINTED FINISH, REFER TO SPEC SECTION 05 50 00.

STEPS
TYPE 1 - CIP CONCRETE SPINE STAIRS, SEE DETAILS & REFER TO SPEC SECTION 03 30 00.

TYPE 1-B - CIP CONCRETE SPINE STAIRS, SEE DETAILS & REFER TO SPEC SECTION 03 30 00.

TYPE 2 - CIP CONCRETE STAIR WITH ARCHITECTURAL FINISH. SEE DETAILS & REFER TO SPEC SECTION 03 30 00.

TYPE 3 - PAINTED STEEL RISER (3/8" THICK) IN CRUSHED ROCK, SEE DETAILS & REFER TO SPEC SECTION 05 50 00.

TYPE 4 - STONE SLAB STEPS, REFER TO DETAIL AND SPEC SECTION 04 41 00.

HANDRAIL
SEE ARCH

RUNNEL
CIP CONCRETE SIDEWALLS AND BASE WITH PAINTED STEEL V-CHANNEL, REFER TO DETAILS & SPEC SECTION 05 50 00.

METAL EDGING
BLACK COLMET, POWDER-COATED STEEL EDGING, OR SIMILAR, TO BE APPROVED BY L.A., 1/4" THICKNESS, 4" DEPTH (HOLD FLUSH WITH FIGURE GRADES)

TRENCH GRATE
DECORATIVE TRENCH GRATE, SEE SPEC SECTION 32 94 43.

ROCK MULCH
3-5" WASHED, ROUNDED RIVER ROCK, SEE SPEC SECTION 07 55 63.

BOULDERS
2-4 MAN, SALVAGED ON-SITE, REF TO SPEC SECTION 04 41 00.

PLANTING
SEE SHEET L601; SEE SPEC SECTION 32 90 00.

MILLER HULL
The Miller Hull Partnership, LLP
Architecture and Planning
Polson Building
71 Columbia, Sixth Floor
Seattle, WA 98104

Phone: 206.682.6837
Contact: Name

PARTNERSHIP berger

STAMP

STATE OF WASHINGTON
JONATHAN D. MORLEY
NO. 736 EXP. 2/21/2023
LANDSCAPE ARCHITECT

MERCER ISLAND
REVIEWED FOR CODE COMPLIANCE
March 27, 2023
SITE COPY

MERCER ISLAND HOUSE: CASCADE

6838 96th Ave SE
Mercer Island, WA 90840

SUBMITTAL

100% CONSTRUCTION DOCUMENTS

FEBRUARY 24, 2023

REVISIONS

No.	Description	Date

Drawn: JM / SL / CA / SM
Checked: JM / SL / CA
M|H Proj No.: A20.0085.00

Issue Date: FEBRUARY 24, 2023

SHEET

LANDSCAPE ENLARGEMENTS

L103

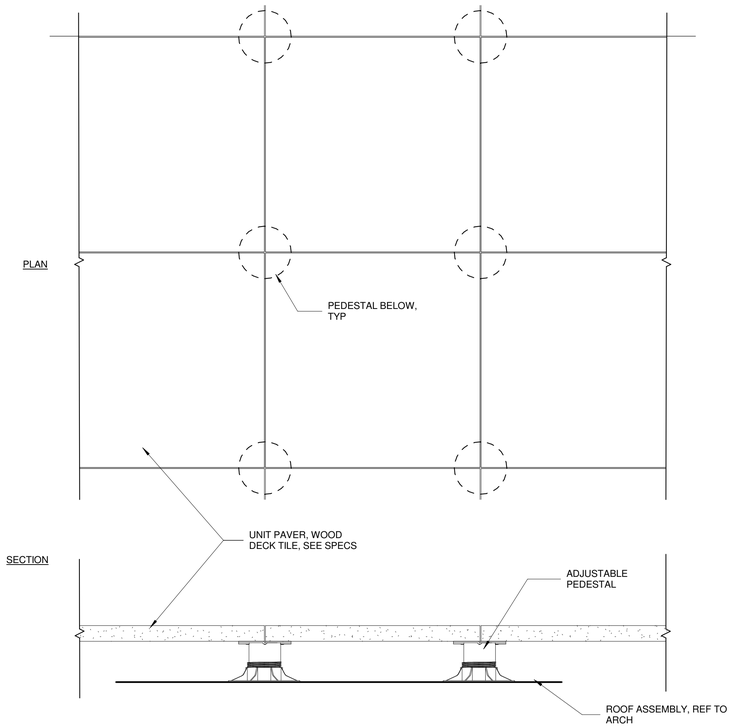

1 UNIT PAVERS - PEDESTAL SET ON STRUCTURE
1 1/2" = 1'-0"

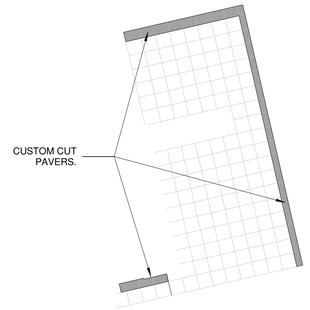

ROOF PAVER DIAGRAM

NOTE:

REFER TO SHEET L602 FOR GREEN ROOF LAYERING DETAILS

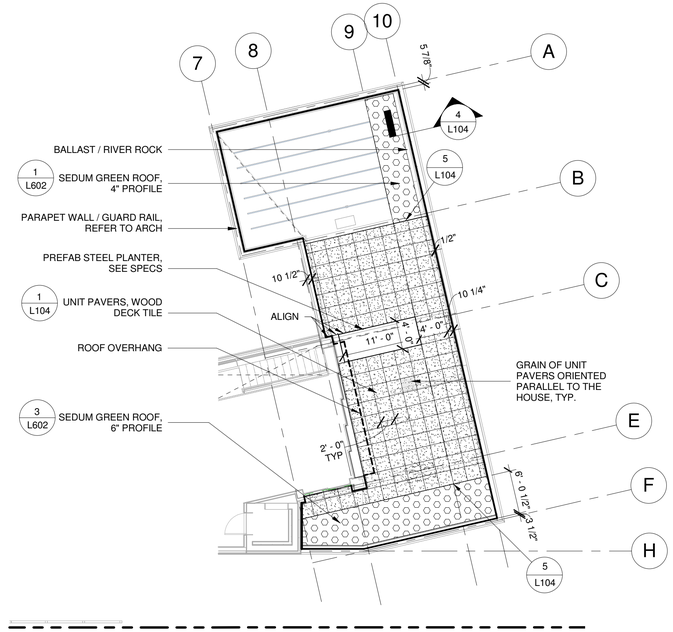

2 ROOF PLAN
1" = 10'-0"

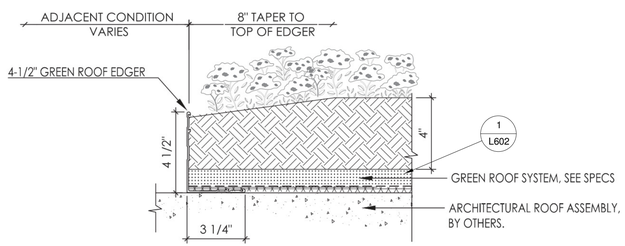

NOTE:
1. EDGER IS HELD IN PLACE BY WEIGHT OF GREEN ROOF SYSTEM. NO MECHANICAL FASTENING TO THE ROOF IS REQUIRED.

COLUMBIA GREEN TECHNOLOGIES	LGR5.02	4" DEPTH GREEN ROOF EDGE CONDITION	
		LAYERED SYSTEM	DETAIL SCALE: 3"=1'-0"

Corporate Office: 79 SE Taylor Street, Suite 201 Portland, OR 97214
Telephone: (503) 327-8723 · www.columbia-green.com

3 GREEN ROOF, EDGING IN 4" DEPTH
1 1/2" = 1'-0"

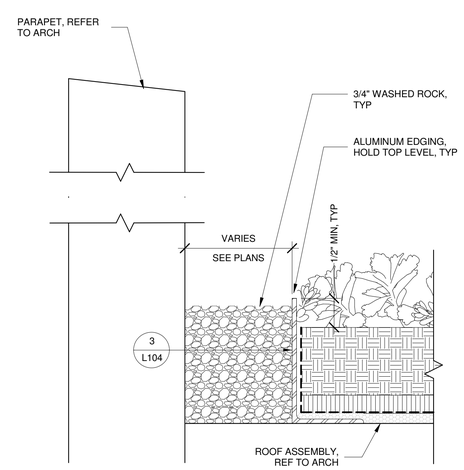

4 RIVER ROCK EDGE CONDITION AT PARAPET
3" = 1'-0"

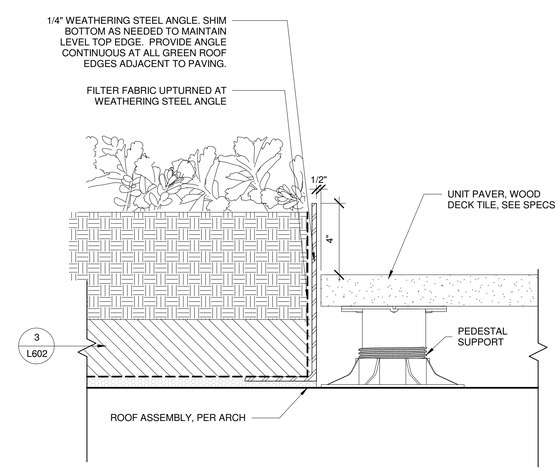

5 ELEVATED STEEL EDGING AT SOUTH PLANTER
3" = 1'-0"

MILLER HULL
The Miller Hull Partnership, LLP
Architecture and Planning
Polson Building
71 Columbia, Sixth Floor
Seattle, WA 98104

Phone: 206.682.6837
Contact: Name

PARTNERSHIP berger

STAMP

STATE OF WASHINGTON · JONATHAN D. MORLEY · NO. 736 EXP. 2/21/2023 · LANDSCAPE ARCHITECT

REVIEWED FOR CODE COMPLIANCE
March 27, 2023
SITE COPY

MERCER ISLAND HOUSE: CASCADE

6838 96th Ave SE
Mercer Island, WA 90840

SUBMITTAL

100% CONSTRUCTION DOCUMENTS

FEBRUARY 24, 2023

REVISIONS

No.	Description	Date

Drawn: JM / SL / CA / SM
Checked: JM / SL / CA
M|H Proj No.: A20.0085.00

Issue Date: FEBRUARY 24, 2023

SHEET

ROOF LAYOUT & MATERIAL PLAN & DETAILS

L104

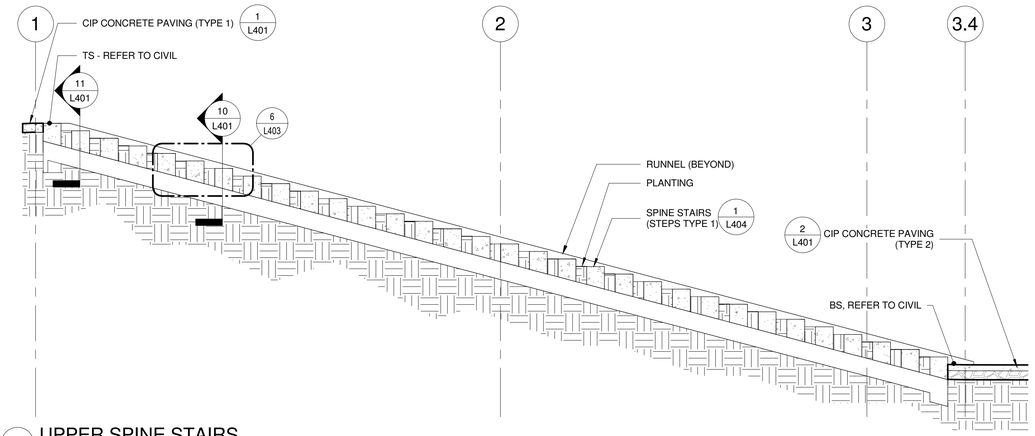

1 UPPER SPINE STAIRS
1/4" = 1'-0"

LEGEND:

BS	BOTTOM OF STAIR
FG	FINISH GRADE
OHWM	ORDINARY HIGH WATER MARK
TS	TOP OF STAIR
TW	TOP OF WALL

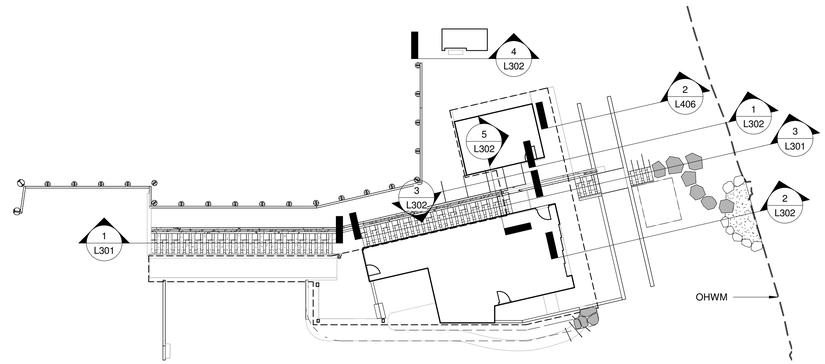

2 SITE SECTIONS KEY MAP
1" = 20'-0"

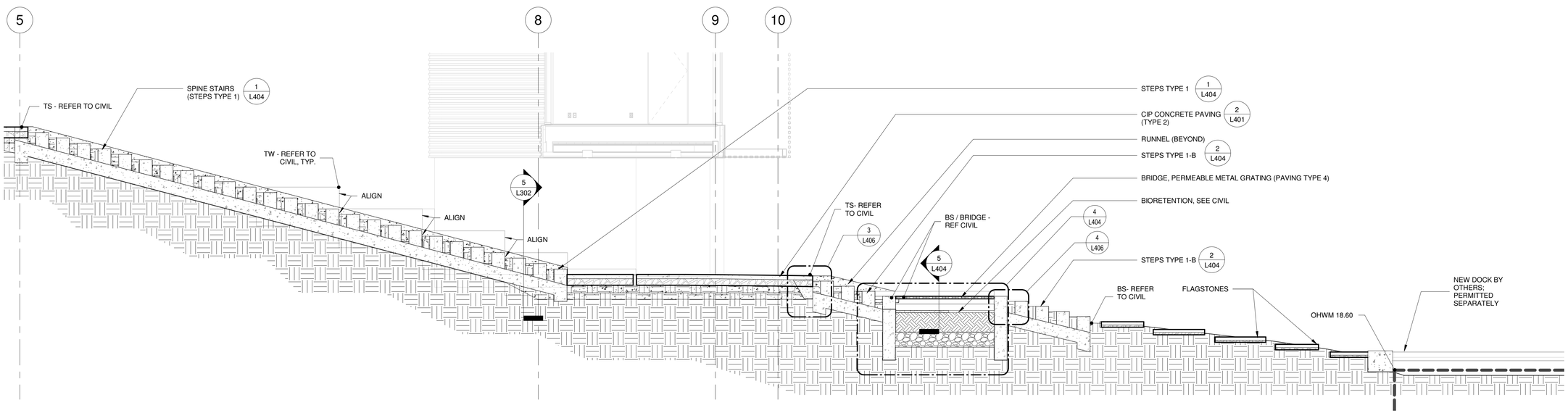

3 LOWER SPINE TO LAKESIDE SECTION
1/4" = 1'-0"

MILLER HULL
The Miller Hull Partnership, LLP
Architecture and Planning
Polson Building
71 Columbia, Sixth Floor
Seattle, WA 98104

Phone: 206.682.6837
Contact: Name

PARTNERSHIP berger

STAMP

STATE OF WASHINGTON
JONATHAN D. MORLEY
NO. 736 EXP. 2/21/2023
LANDSCAPE ARCHITECT

MERCER ISLAND
REVIEWED FOR CODE COMPLIANCE
March 27, 2023
SITE COPY
BUILDING

MERCER ISLAND HOUSE: CASCADE

6838 96th Ave SE
Mercer Island, WA 90840

SUBMITTAL

100% CONSTRUCTION DOCUMENTS

FEBRUARY 24, 2023

REVISIONS

No.	Description	Date

Drawn: JM / SL / CA / SM
Checked: JM / SL / CA
M|H Proj No.: A20.0085.00

Issue Date: FEBRUARY 24, 2023

SHEET

SITE SECTIONS
L301

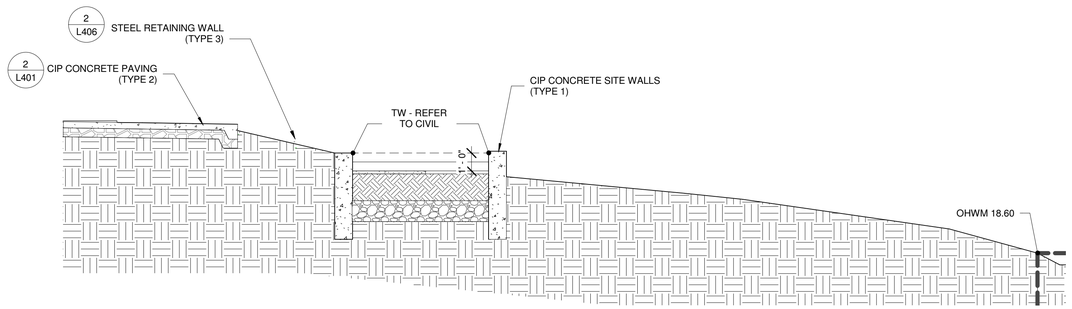

1 LAKESIDE BIORETENTION NORTH
1/4" = 1'-0"

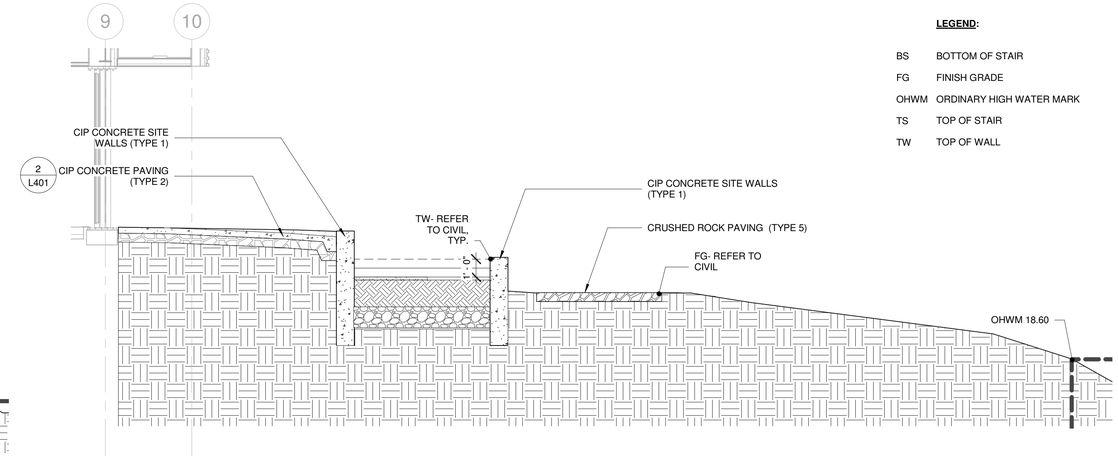

2 LAKESIDE BIORETENTION SOUTH
1/4" = 1'-0"

LEGEND:

BS	BOTTOM OF STAIR
FG	FINISH GRADE
OHWM	ORDINARY HIGH WATER MARK
TS	TOP OF STAIR
TW	TOP OF WALL

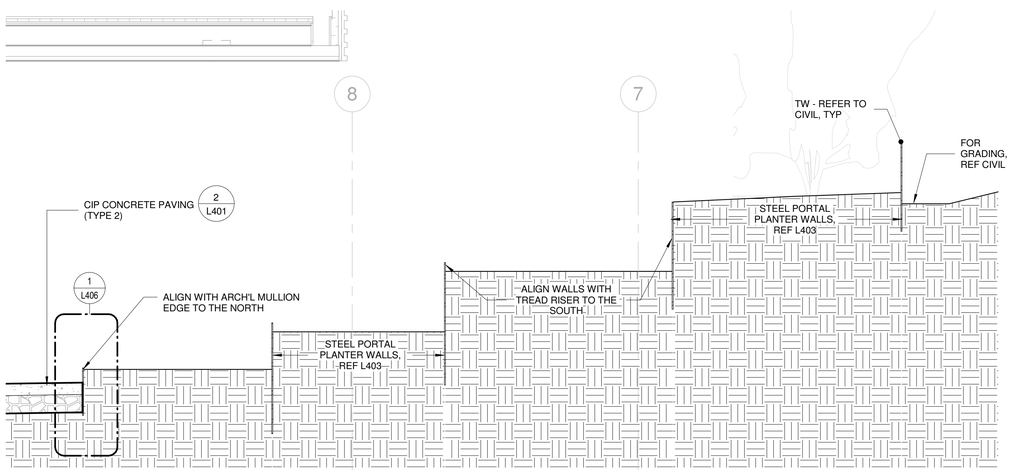

3 PORTAL SECTION E-W
1/2" = 1'-0"

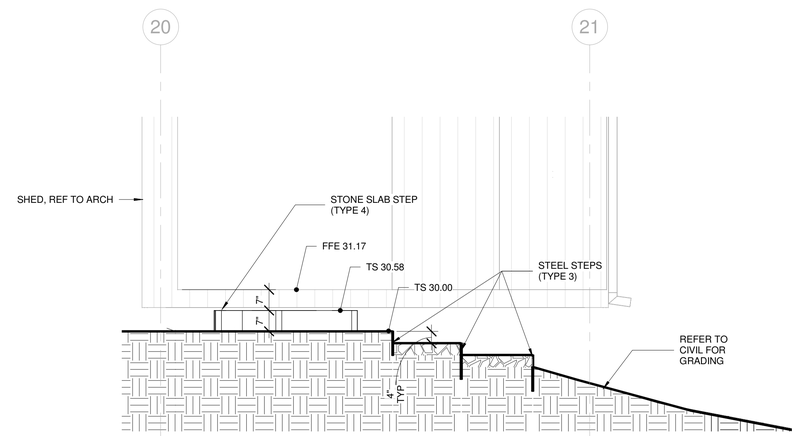

4 SHED STAIRS
1/2" = 1'-0"

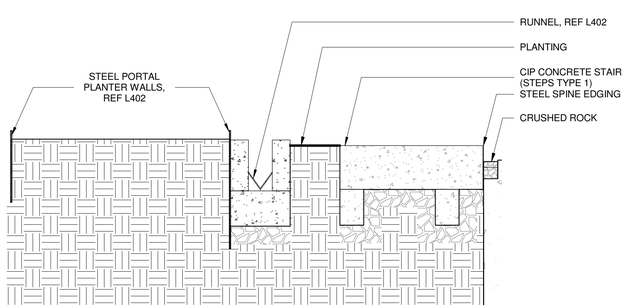

5 PORTAL SECTION N-S
1/2" = 1'-0"

MILLER HULL
The Miller Hull Partnership, LLP
Architecture and Planning
Polson Building
71 Columbia, Sixth Floor
Seattle, WA 98104

Phone: 206.682.6837
Contact: Name

PARTNERSHIP berger

STAMP

STATE OF WASHINGTON
JONATHAN D. MORLEY
NO. 736 EXP. 2/21/2023
LANDSCAPE ARCHITECT

MERCER ISLAND
REVIEWED
FOR CODE
COMPLIANCE
March 27, 2023
SITE COPY

MERCER ISLAND HOUSE: CASCADE

6838 96th Ave SE
Mercer Island, WA 90840

SUBMITTAL

100% CONSTRUCTION DOCUMENTS

FEBRUARY 24, 2023

REVISIONS

No.	Description	Date

Drawn: JM / SL / CA / SM
Checked: JM / SL / CA
M|H Proj No.: A20.0085.00

Issue Date: FEBRUARY 24, 2023

SHEET

SITE SECTIONS
L302

NOTES:
1. MIN. CROSS SLOPE (PERPENDICULAR TO DIRECTION OF TRAVEL) SHALL BE 1%; MAX. CROSS SLOPE SHALL BE LESS THAN OR EQUAL TO 2%.
2. MEET ALL ADJACENT PAVING SURFACES IN FLUSH CONDITION UNLESS NOTED OTHERWISE.
3. SLOPE OF PAVING SHALL MATCH ADJACENT PAVING WHERE POSSIBLE.

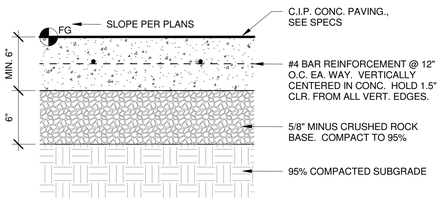

1 CIP CONCRETE - VEHICULAR (PAVING TYPE 1)
1 1/2" = 1'-0"

NOTES:
1. MIN. CROSS SLOPE (PERPENDICULAR TO DIRECTION OF TRAVEL) SHALL BE 1%; MAX. CROSS SLOPE SHALL BE LESS THAN OR EQUAL TO 2%.
2. MEET ANY ADJACENT PAVING SURFACES IN FLUSH CONDITION UNLESS NOTED OTHERWISE.
3. SLOPE OF PAVING SHALL MATCH ADJACENT PAVING WHERE POSSIBLE.

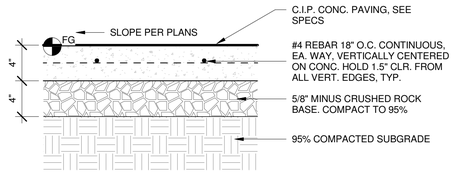

2 CIP CONCRETE - PEDESTRIAN (PAVING TYPE 2)
1 1/2" = 1'-0"

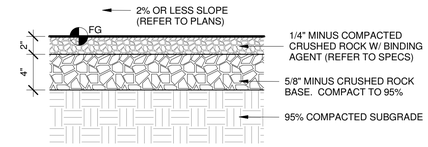

3 CRUSHED ROCK (PAVING TYPE 5)
1 1/2" = 1'-0"

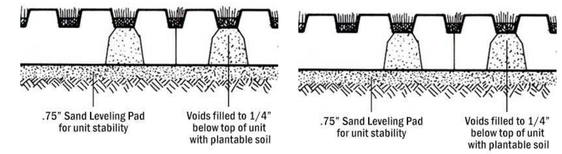

4 TURF BLOCK DETAIL (PAVING TYPE 3)
NTS

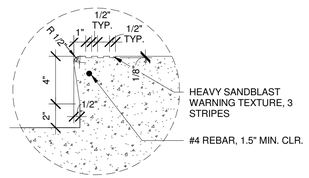

5 CONCRETE STAIR NOSING
1 : 6

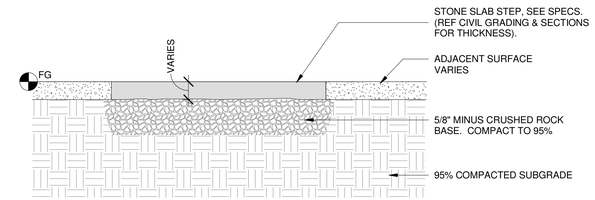

6 STONE SLAB STEPS
1 1/2" = 1'-0"

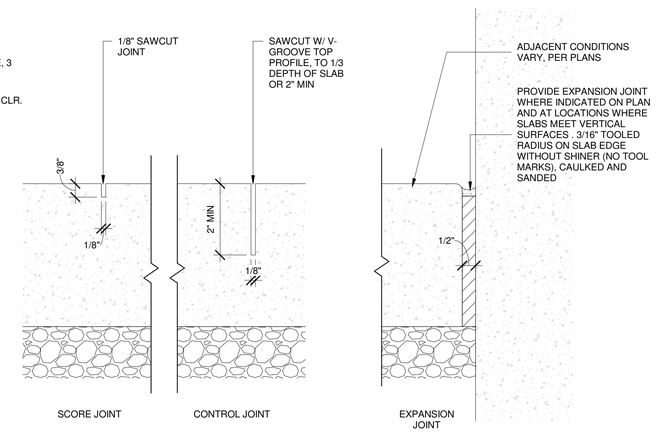

8 CIP CONCRETE JOINTING
6" = 1'-0"

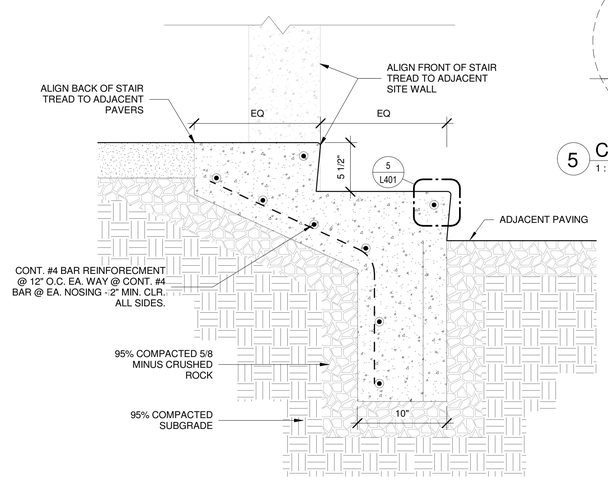

7 CIP CONCRETE STAIRS (TYPE 2) - DOG RUN
1 1/2" = 1'-0"

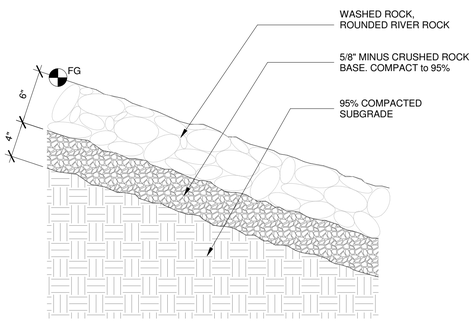

9 ROCK MULCH DETAIL
1 1/2" = 1'-0"

SPINE STAIRS NOTES:

1. PROVIDE SHOP DRAWINGS FOR ALL METAL ASSEMBLIES SHOWING ALL MEMBERS, ATTACHMENTS, WELDS, FINISHES & COMPONENTS.

2. ALL METAL COMPONENTS OF STEEL AND CIP CONC. STAIRS SHALL BE STEEL WITH PAINTED FINISH, SEE SPECS.

3. WELD ALL METAL COMPONENTS OF STAIR AND RUNNEL TOGETHER. GRIND ALL WELDS SMOOTH; PROVIDE EASE EDGE ON ANY EXPOSED EDGES (NO SHARP EDGES).

4. FOR STAIR AND RUNNEL ASSEMBLIES, REFER TO: 1 / L402 2 / L402 3 / L402 6 / L403

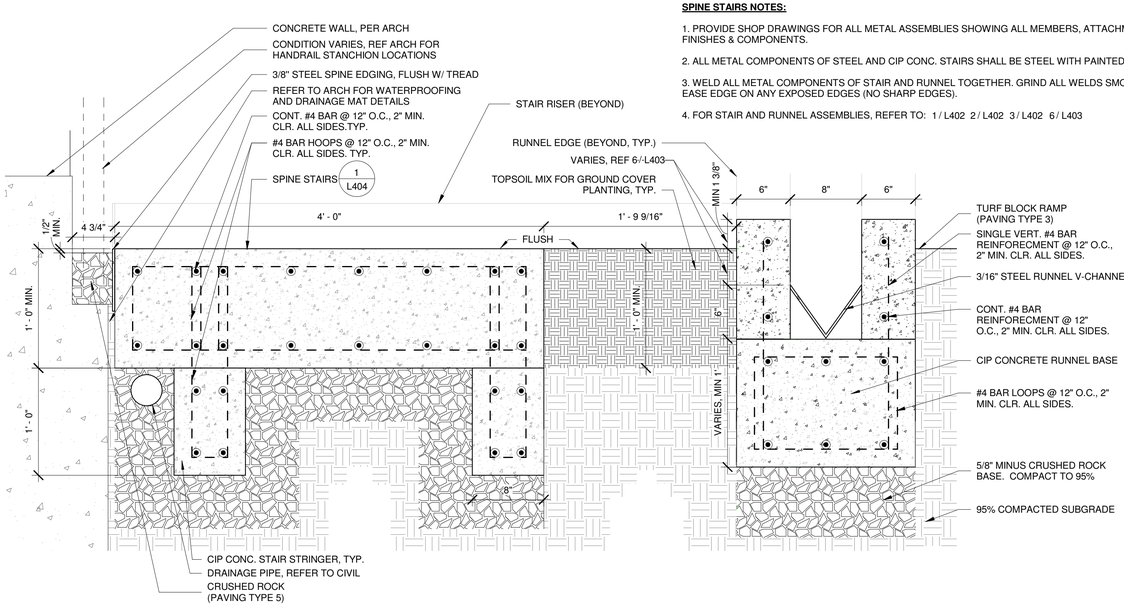

10 SPINE CROSS SECTION (4' TREAD)
1 1/2" = 1'-0"

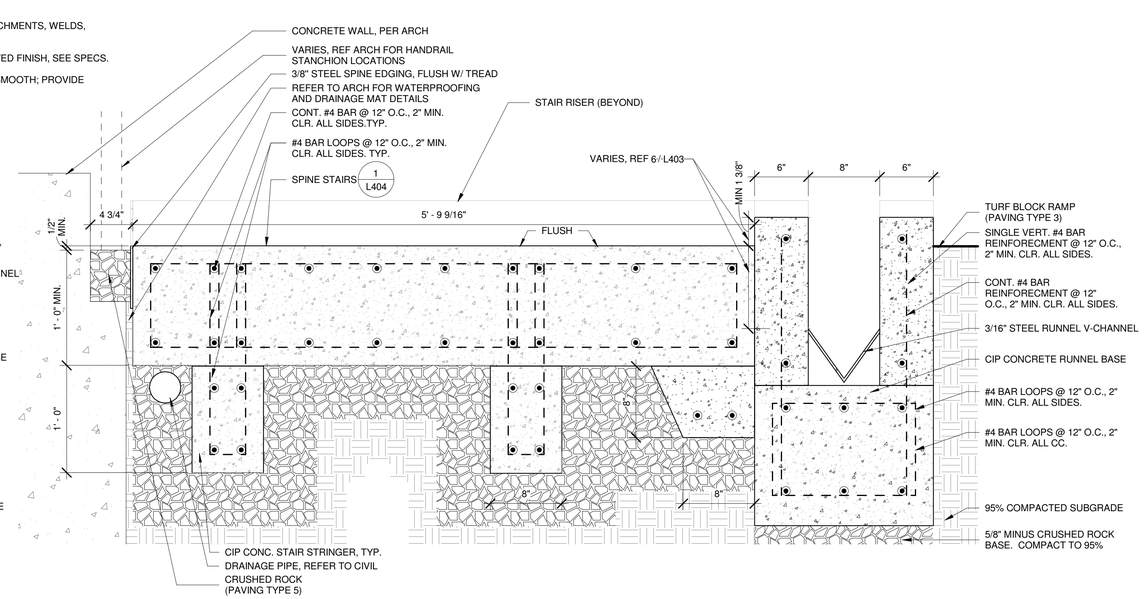

11 SPINE CROSS SECTION (WIDE TREAD)
1 1/2" = 1'-0"

MILLER HULL
The Miller Hull Partnership, LLP
Architecture and Planning
Polson Building
71 Columbia, Sixth Floor
Seattle, WA 98104
Phone: 206.682.6837
Contact: Name

PARTNERSHIP berger

STAMP

STATE OF WASHINGTON
JONATHAN D. MORLEY
NO. 736 EXP. 2/21/2023
LANDSCAPE ARCHITECT

REVIEWED FOR CODE COMPLIANCE
March 27, 2023
SITE COPY

MERCER ISLAND HOUSE: CASCADE

6838 96th Ave SE
Mercer Island, WA 90840

SUBMITTAL

100% CONSTRUCTION DOCUMENTS

FEBRUARY 24, 2023

REVISIONS

No.	Description	Date

Drawn: JM / SL / CA / SM
Checked: JM / SL / CA
M|H Proj No.: A20.0085.00
Issue Date: FEBRUARY 24, 2023

SHEET

SITE DETAILS - PAVING & STAIRS

L401

SPINE GEN. NOTES:
(NOTES APPLY TO ALL DWGS ON THIS SHEET):

1. PROVIDE SHOP DRAWINGS FOR ALL METAL ASSEMBLIES SHOWING ALL MEMBERS, ATTACHMENTS, WELDS, FINISHES & COMPONENTS.

2. ALL METAL COMPONENTS OF THE SPINE STAIR AND RUNNEL, AND ANY METAL COMPONENTS TOUCHING IT - INCLUDING PORTAL PLANTER WALLS & LAKESIDE WALLS - SHALL BE STEEL WITH PAINTED FINISH UNLESS OTHERWISE NOTED, SEE SPECS.

3. ALL METAL COMPONENTS OF THE SPINE STAIR AND RUNNEL AND ANY METAL COMPONENTS TOUCHING IT - INCLUDING PORTAL WALLS & LAKESIDE WALLS - SHALL BE 3/8" THICK, UNLESS OTHERWISE NOTED AND EXCEPT FOR THE STEEL RUNNEL V-CHANNEL & TAB, SEE SPECS. STEEL RUNNEL V-CHANNEL & TAB SHALL BE 3/16" THICK.

4. WELD ALL METAL COMPONENTS OF SPINE TOGETHER. GRIND ALL WELDS SMOOTH; PROVIDE EASE EDGE ON ANY EXPOSED EDGES (NO SHARP EDGES).

5. ALL V-CHANNELS LOCATIONS MUST MEET MINIMUM SECTION REQUIREMENTS (SEE 10/L401) FOR STORMWATER CAPACITY AND SPECIFIED SLOPES FOR POSITIVE DRAINAGE.

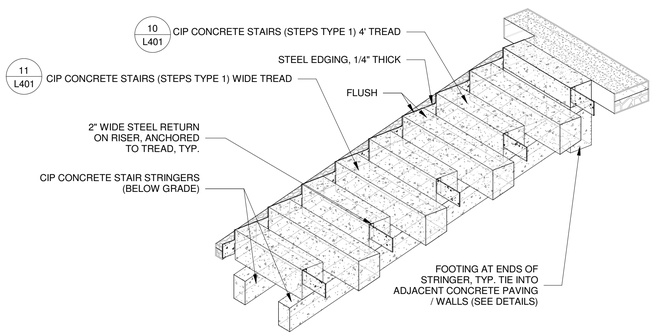

1 SPINE STAIR 3D AXON VIEW

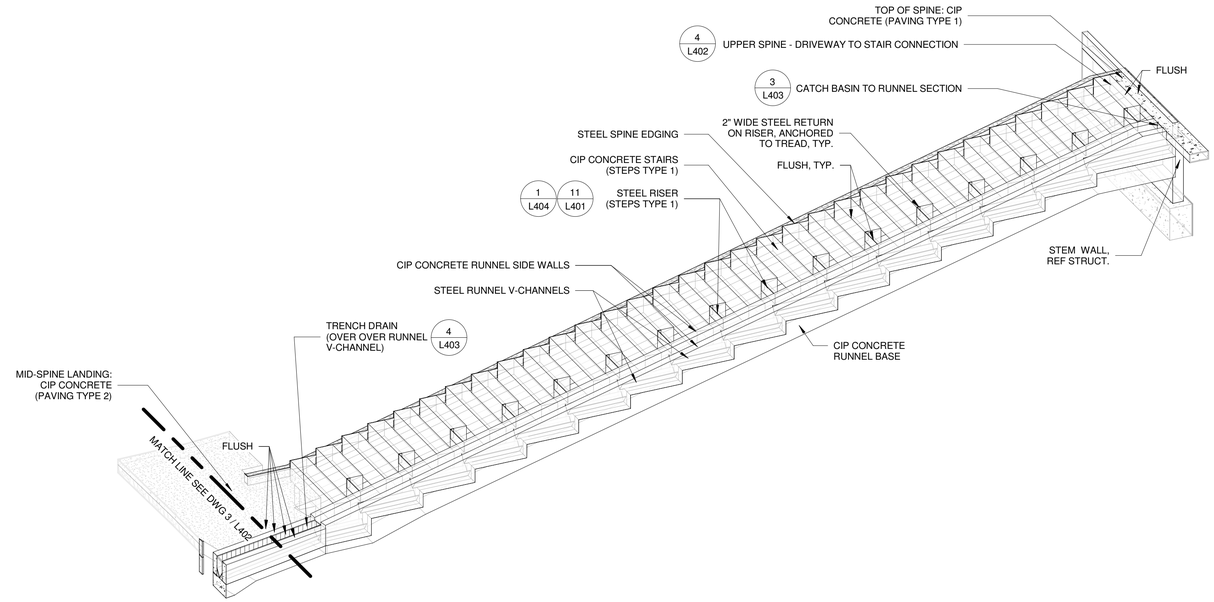

2 UPPER SPINE - OVERALL 3D AXON VIEW

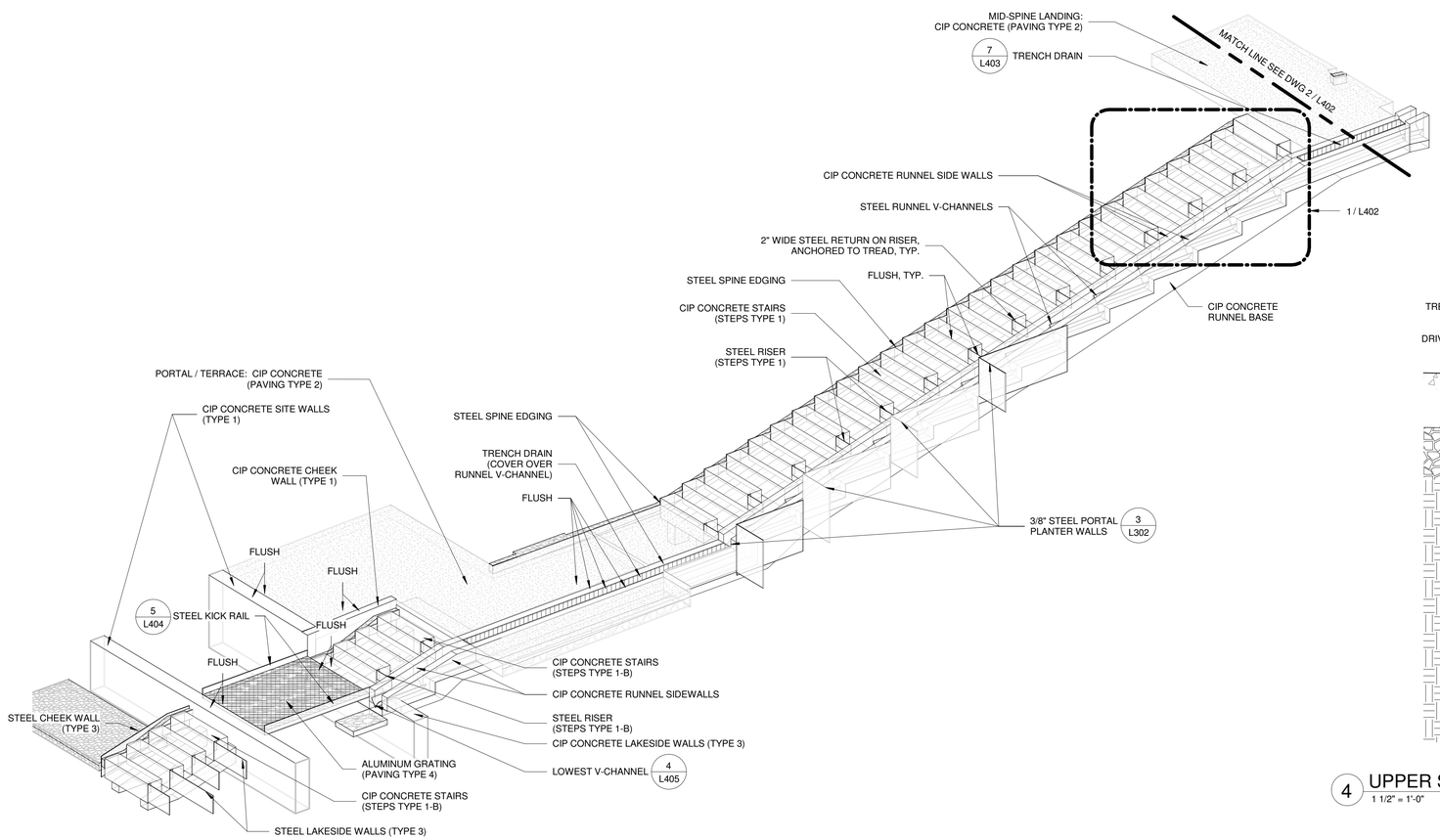

3 LOWER SPINE - OVERALL 3D AXON VIEW

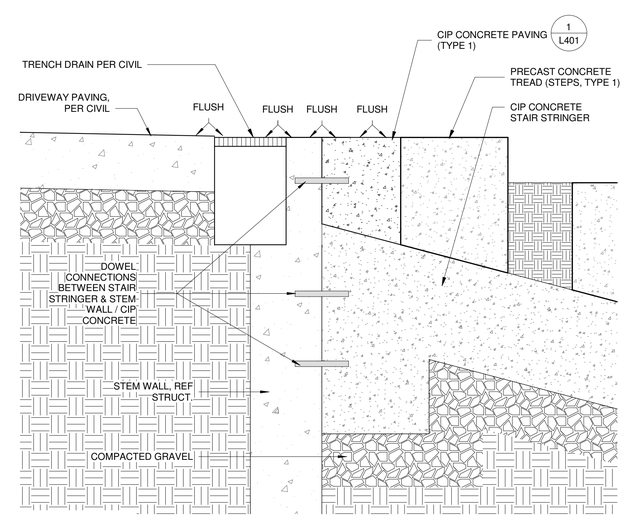

4 UPPER SPINE - DRIVEWAY TO STAIR CONNECTION
1 1/2" = 1'-0"

MILLER HULL
The Miller Hull Partnership, LLP
Architecture and Planning
Polson Building
71 Columbia, Sixth Floor
Seattle, WA 98104

Phone: 206.682.6837
Contact: Name

PARTNERSHIP berger

STAMP

STATE OF WASHINGTON
JONATHAN D. MORLEY
NO. 736 EXP. 2/21/2023
LANDSCAPE ARCHITECT

MERCER ISLAND
REVIEWED FOR CODE COMPLIANCE
March 27, 2023
SITE COPY
BUILDING

MERCER ISLAND HOUSE: CASCADE

6838 96th Ave SE
Mercer Island, WA 90840

SUBMITTAL

100% CONSTRUCTION DOCUMENTS

FEBRUARY 24, 2023

REVISIONS

No.	Description	Date

Drawn: Author
Checked: Checker
M|H Proj No.: A20.0085.00

Issue Date: FEBRUARY 24, 2023

SHEET

SITE DETAILS - SPINE / RUNNEL

L402

SPINE GEN. NOTES:
(NOTES APPLY TO ALL DWGS ON THIS SHEET):

1. PROVIDE SHOP DRAWINGS FOR ALL METAL ASSEMBLIES SHOWING ALL MEMBERS, ATTACHMENTS, WELDS, FINISHES & COMPONENTS.

2. ALL METAL COMPONENTS OF THE SPINE STAIR AND RUNNEL, AND ANY METAL COMPONENTS TOUCHING IT - INCLUDING PORTAL PLANTER WALLS & LAKESIDE WALLS - SHALL BE STEEL WITH PAINTED FINISH UNLESS OTHERWISE NOTED, SEE SPECS.

3. ALL METAL COMPONENTS OF THE SPINE STAIR AND RUNNEL AND ANY METAL COMPONENTS TOUCHING IT - INCLUDING PORTAL WALLS & LAKESIDE WALLS - SHALL BE 3/8" THICK, UNLESS OTHERWISE NOTED AND EXCEPT FOR THE STEEL RUNNEL V-CHANNEL & TAB, SEE SPECS. STEEL RUNNEL V-CHANNEL & TAB SHALL BE 3/16" THICK.

4. WELD ALL METAL COMPONENTS OF SPINE TOGETHER. GRIND ALL WELDS SMOOTH; PROVIDE EASE EDGE ON ANY EXPOSED EDGES (NO SHARP EDGES).

5. ALL V-CHANNELS LOCATIONS MUST MEET MINIMUM SECTION REQUIREMENTS (SEE 10/L401) FOR STORMWATER CAPACITY AND SPECIFIED SLOPES FOR POSITIVE DRAINAGE.

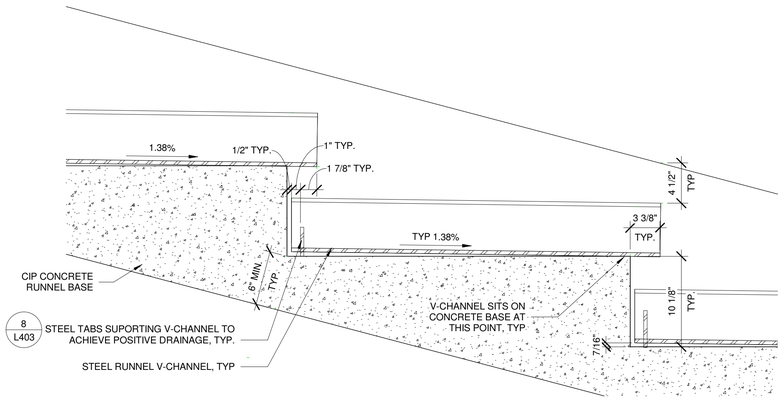

1 RUNNEL - TYPICAL SECTION
1 1/2" = 1'-0"

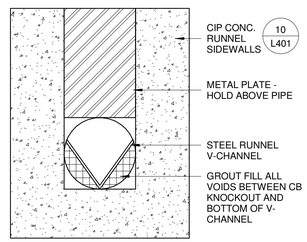

2 RUNNEL CROSS SECTION
1 1/2" = 1'-0"

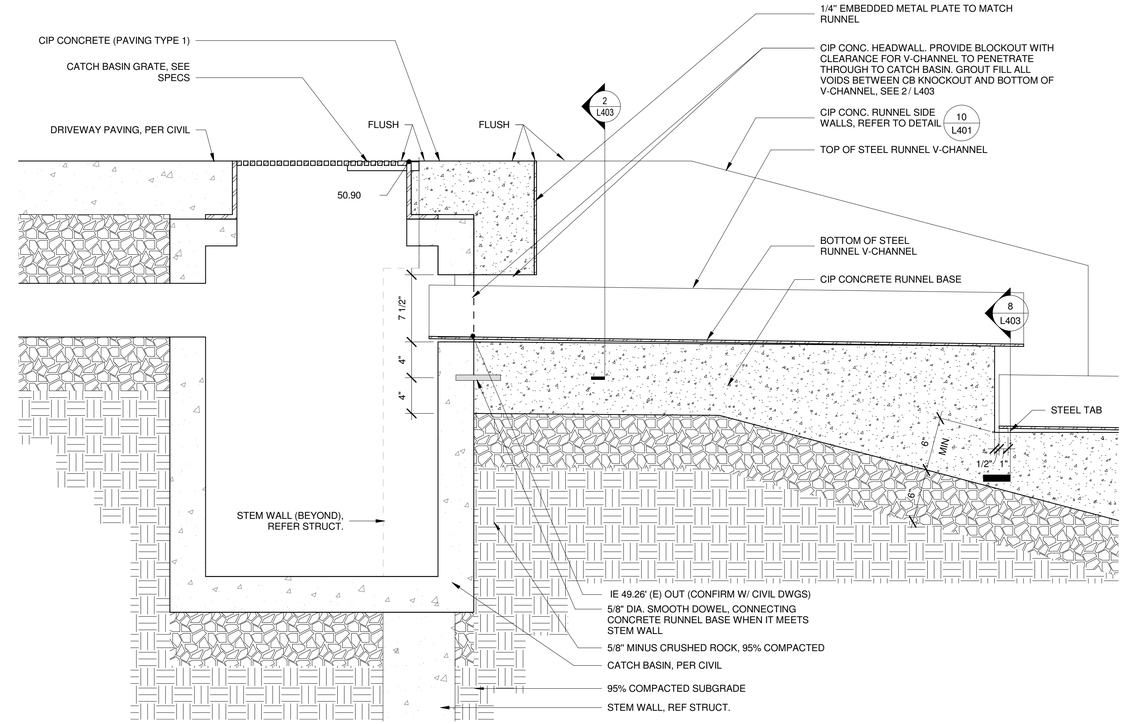

3 CATCH BASIN TO RUNNEL SECTION
1 1/2" = 1'-0"

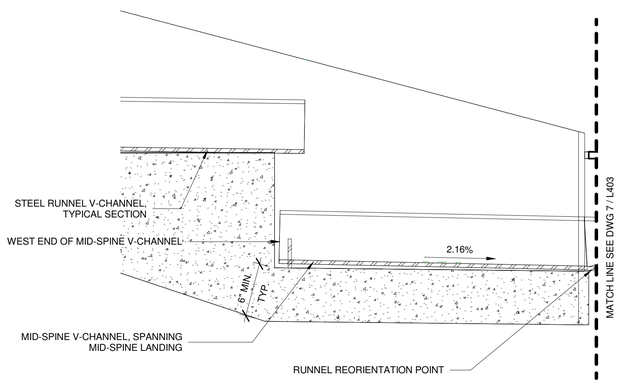

4 RUNNEL AT MID-SPINE LANDING - WEST
1 1/2" = 1'-0"

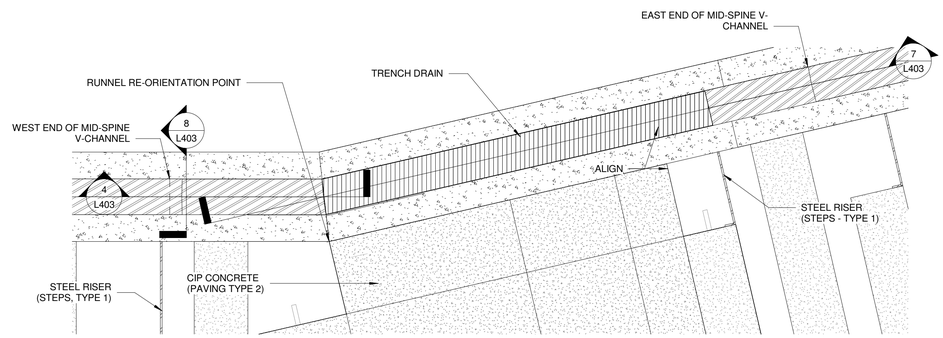

5 RUNNEL AT MID-SPINE LANDING - REF PLAN
3/4" = 1'-0"

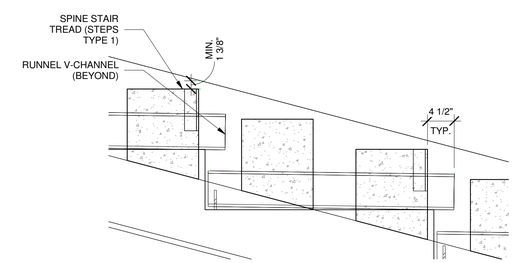

6 RUNNEL / STAIR RELATIONSHIP
1" = 1'-0"

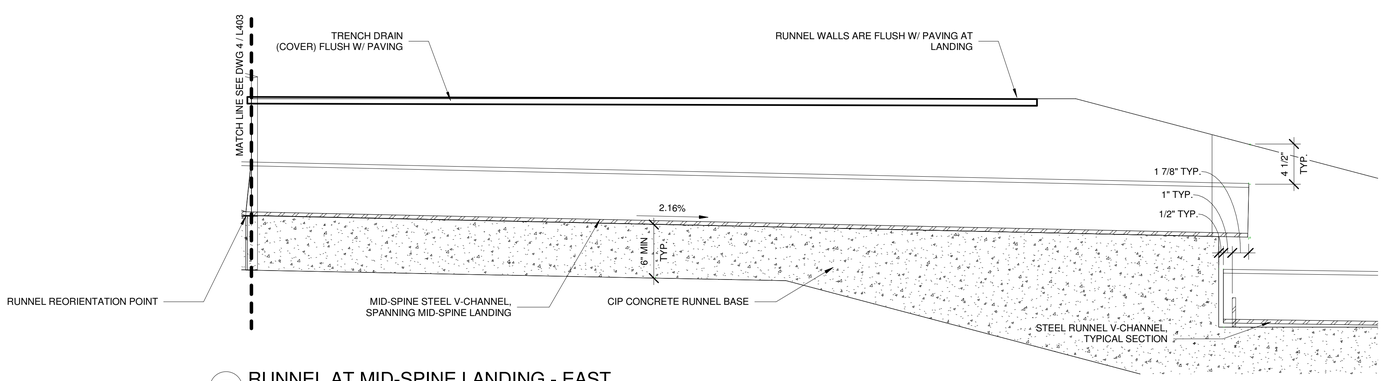

7 RUNNEL AT MID-SPINE LANDING - EAST
1 1/2" = 1'-0"

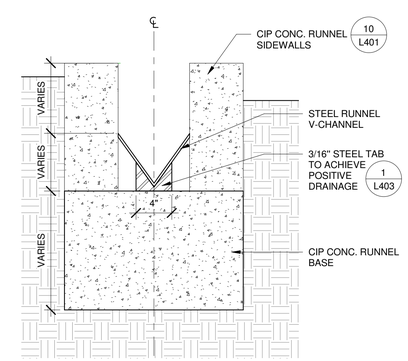

8 V-CHANNEL AT TAB
1 1/2" = 1'-0"

MILLER HULL
The Miller Hull Partnership, LLP
Architecture and Planning
Polson Building
71 Columbia, Sixth Floor
Seattle, WA 98104

Phone: 206.682.6837
Contact: Name

PARTNERSHIP berger

STAMP

STATE OF WASHINGTON
JONATHAN D. MORLEY
NO. 736 EXP. 2/21/2023
LANDSCAPE ARCHITECT

MERCER ISLAND
REVIEWED FOR CODE COMPLIANCE
March 27, 2023
SITE COPY
BUILDING

MERCER ISLAND HOUSE: CASCADE

6838 96th Ave SE
Mercer Island, WA 90840

SUBMITTAL

100% CONSTRUCTION DOCUMENTS

FEBRUARY 24, 2023

REVISIONS

No.	Description	Date

Drawn: JM / SL / CA / SM
Checked: JM / SL / CA
M|H Proj No.: A20.0085.00

Issue Date: FEBRUARY 24, 2023

SHEET

SITE DETAILS - SPINE / RUNNEL

L403

SPINE GEN. NOTES:
(NOTES APPLY TO ALL DWGS ON THIS SHEET):

1. PROVIDE SHOP DRAWINGS FOR ALL METAL ASSEMBLIES SHOWING ALL MEMBERS, ATTACHMENTS, WELDS, FINISHES & COMPONENTS.

2. ALL METAL COMPONENTS OF THE SPINE STAIR AND RUNNEL, AND ANY METAL COMPONENTS TOUCHING IT - INCLUDING PORTAL PLANTER WALLS & LAKESIDE WALLS - SHALL BE STEEL WITH PAINTED FINISH UNLESS OTHERWISE NOTED, SEE SPECS.

3. ALL METAL COMPONENTS OF THE SPINE STAIR AND RUNNEL AND ANY METAL COMPONENTS TOUCHING IT - INCLUDING PORTAL WALLS & LAKESIDE WALLS - SHALL BE 3/8" THICK, UNLESS OTHERWISE NOTED AND EXCEPT FOR THE STEEL RUNNEL V-CHANNEL & TAB, SEE SPECS. STEEL RUNNEL V-CHANNEL & TAB SHALL BE 3/16" THICK.

4. WELD ALL METAL COMPONENTS OF SPINE TOGETHER. GRIND ALL WELDS SMOOTH; PROVIDE EASE EDGE ON ANY EXPOSED EDGES (NO SHARP EDGES).

5. ALL V-CHANNELS LOCATIONS MUST MEET MINIMUM SECTION REQUIREMENTS (SEE 10/L401) FOR STORMWATER CAPACITY AND SPECIFIED SLOPES FOR POSITIVE DRAINAGE.

STAIRS NOTES:

REFER TO : 2 / L404

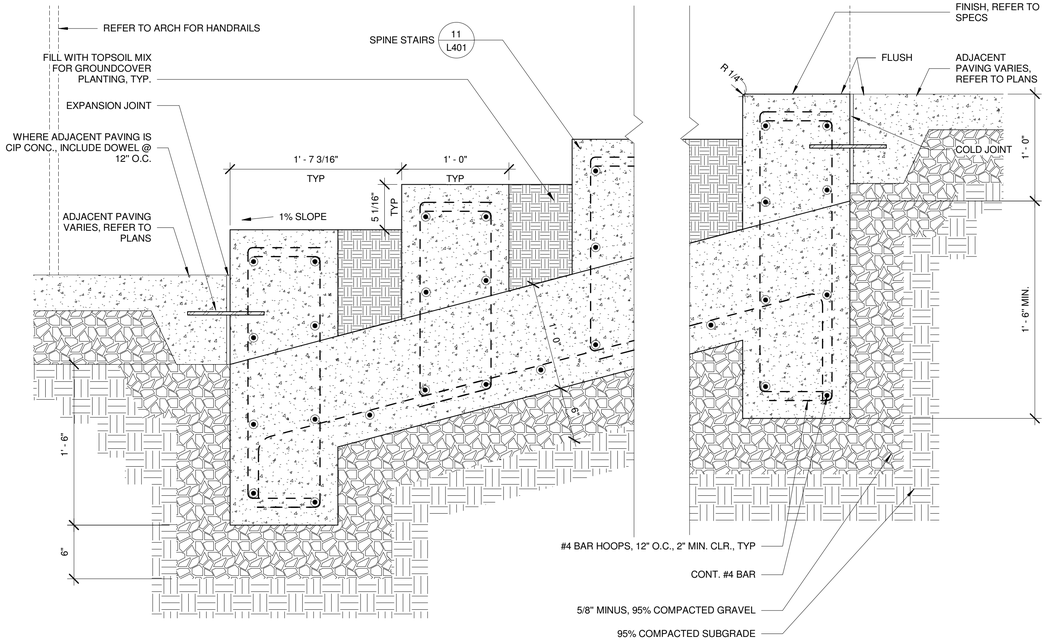

1 SPINE STAIRS (STEPS TYPE 1)
1 1/2" = 1'-0"

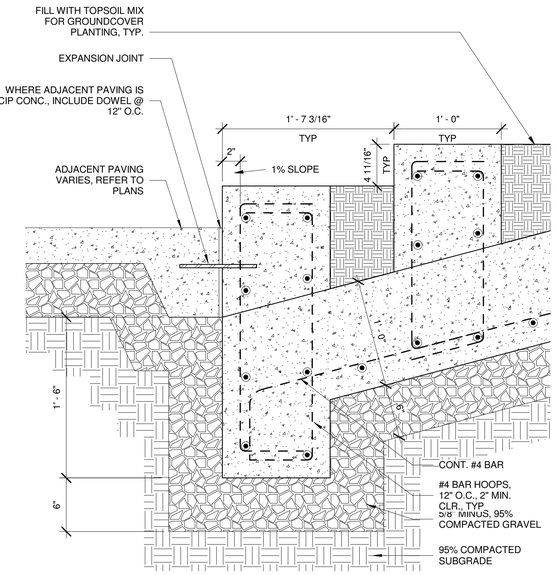

2 SPINE STAIRS (STEPS TYPE 1-B)
1 1/2" = 1'-0"

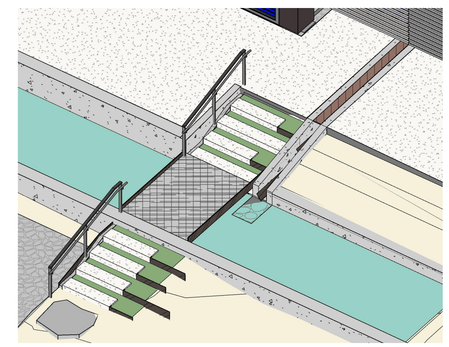

3 BRIDGE LAKESIDE AREA (FOR REF ONLY)
1 1/2" = 1'-0"

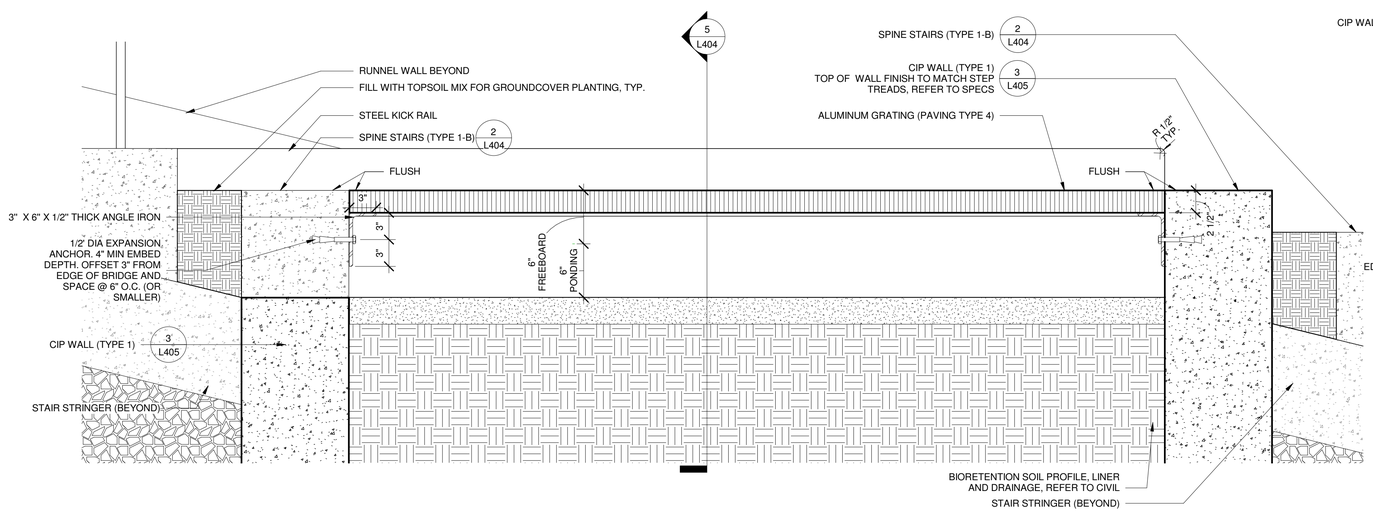

4 BRIDGE OVER BIORETENTION (FACING NORTH)
1 1/2" = 1'-0"

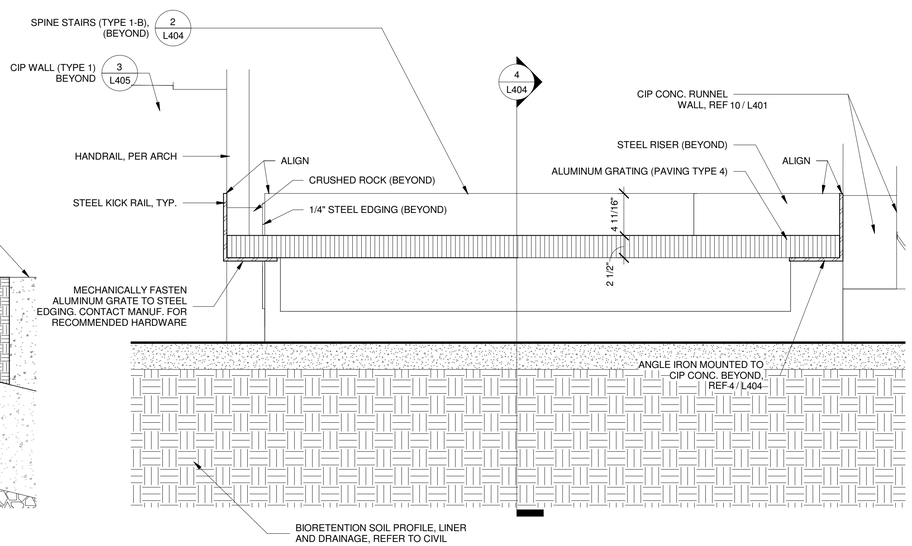

5 BRIDGE OVER BIORETENTION (FACING WEST)
1 1/2" = 1'-0"

MILLER HULL
The Miller Hull Partnership, LLP
Architecture and Planning
Polson Building
71 Columbia, Sixth Floor
Seattle, WA 98104

Phone: 206.682.6837
Contact: Name

PARTNERSHIP berger

STAMP

STATE OF WASHINGTON
JONATHAN D. MORLEY
NO. 236 EXP. 2/21/2023
LANDSCAPE ARCHITECT

MERCER ISLAND
REVIEWED FOR CODE COMPLIANCE
March 27, 2023
SITE COPY

MERCER ISLAND HOUSE: CASCADE

6838 96th Ave SE
Mercer Island, WA 90840

SUBMITTAL

100% CONSTRUCTION DOCUMENTS

FEBRUARY 24, 2023

REVISIONS

No.	Description	Date

Drawn: Author
Checked: Checker
M|H Proj No.: A20.0085.00

Issue Date: FEBRUARY 24, 2023

SHEET

SITE DETAILS - SPINE / RUNNEL

L404

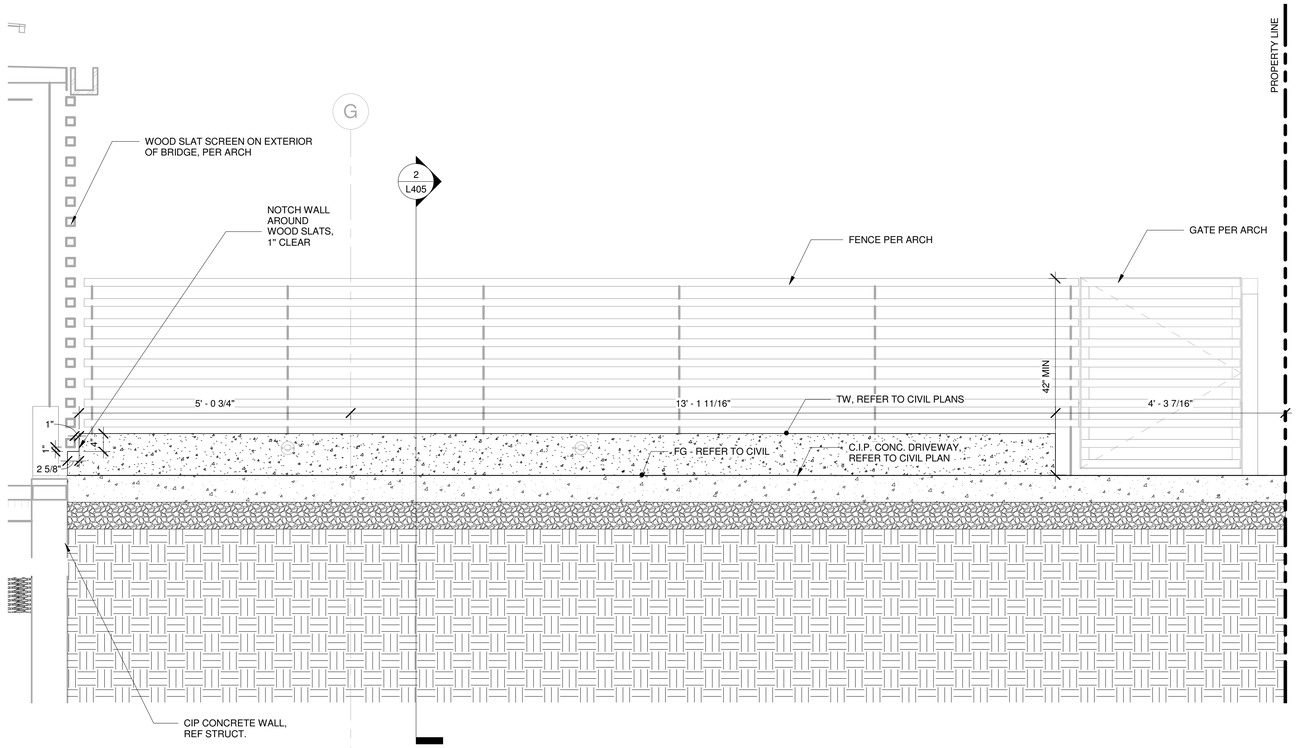

1 DRIVEWAY SITE WALL (TYPE 1) - SECTION ELEVATION
3/4" = 1'-0"

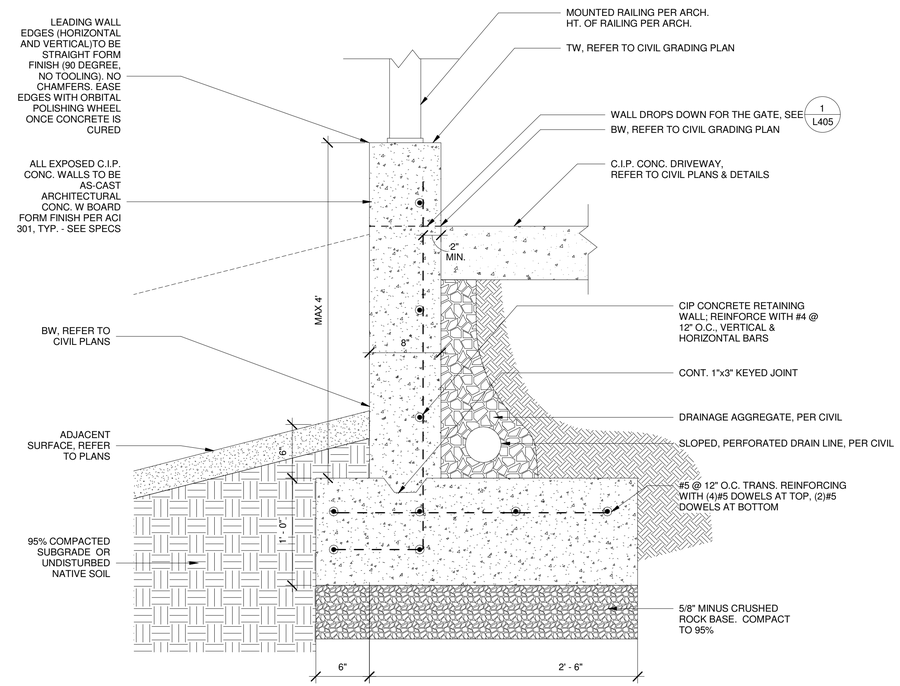

2 DRIVEWAY SITE WALL (TYPE 1) - CROSS SECTION
1 1/2" = 1'-0"

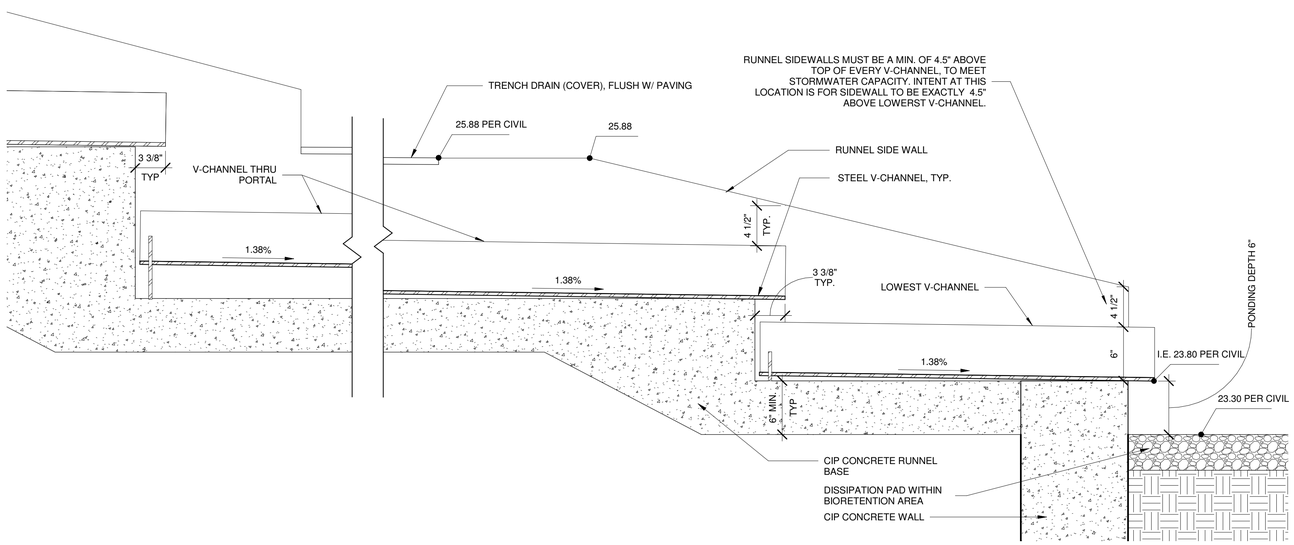

4 RUNNEL, PORTAL TO BIORETENTION
1 1/2" = 1'-0"

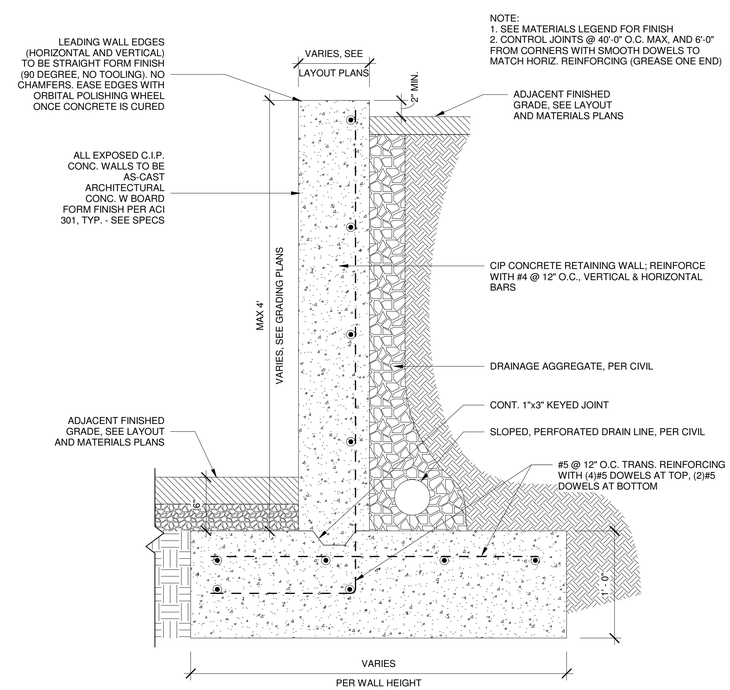

3 CIP CONC. RETAINING WALL (TYPE 1)
1 1/2" = 1'-0"

MILLER HULL
The Miller Hull Partnership, LLP
Architecture and Planning
Polson Building
71 Columbia, Sixth Floor
Seattle, WA 98104
Phone: 206.682.6837
Contact: Name

PARTNERSHIP berger

STAMP

STATE OF WASHINGTON
JONATHAN D. MORLEY
NO. 736 EXP. 2/21/2023
LANDSCAPE ARCHITECT

MERCER ISLAND
REVIEWED FOR CODE COMPLIANCE
March 27, 2023
SITE COPY
BUILDING

MERCER ISLAND HOUSE: CASCADE

6838 96th Ave SE
Mercer Island, WA 90840

SUBMITTAL

100% CONSTRUCTION DOCUMENTS

FEBRUARY 24, 2023

REVISIONS

No.	Description	Date

Drawn: JM / SL / CA / SM
Checked: JM / SL / CA
M|H Proj No.: A20.0085.00
Issue Date: FEBRUARY 24, 2023

SHEET

SITE DETAILS
L405

LAKESIDE WALL GEN. NOTES:
(NOTES APPLY TO ALL DWGS ON THIS SHEET):

1. PROVIDE SHOP DRAWINGS FOR ALL METAL ASSEMBLIES SHOWING ALL MEMBERS, ATTACHMENTS, WELDS, FINISHES & COMPONENTS.

2. ALL METAL COMPONENTS OF THE SPINE STAIR AND RUNNEL, AND ANY METAL COMPONENTS TOUCHING IT - INCLUDING PORTAL PLANTER WALLS & LAKESIDE WALLS - SHALL BE STEEL WITH PAINTED FINISH, SEE SPECS.

3. ALL METAL COMPONENTS OF THE SPINE STAIR AND RUNNEL AND ANY METAL COMPONENTS TOUCHING IT - INCLUDING PORTAL WALLS & LAKESIDE WALLS - SHALL BE 3/8" THICK, UNLESS OTHERWISE NOTED AND EXCEPT FOR THE STEEL RUNNEL V-CHANNEL & TAB.

4. WELD ALL METAL COMPONENTS TOGETHER. GRIND ALL WELDS SMOOTH; PROVIDE EASE EDGE ON ANY EXPOSED EDGES (NO SHARP EDGES).

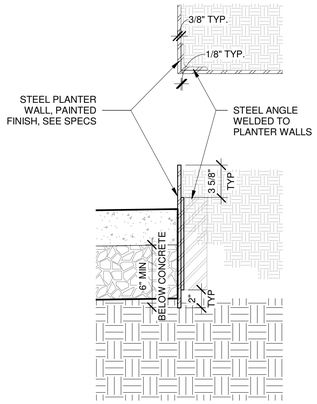

1 STEEL PORTAL PLANTER WALLS (TYPE 3) AT PAVING
1 1/2" = 1'-0"

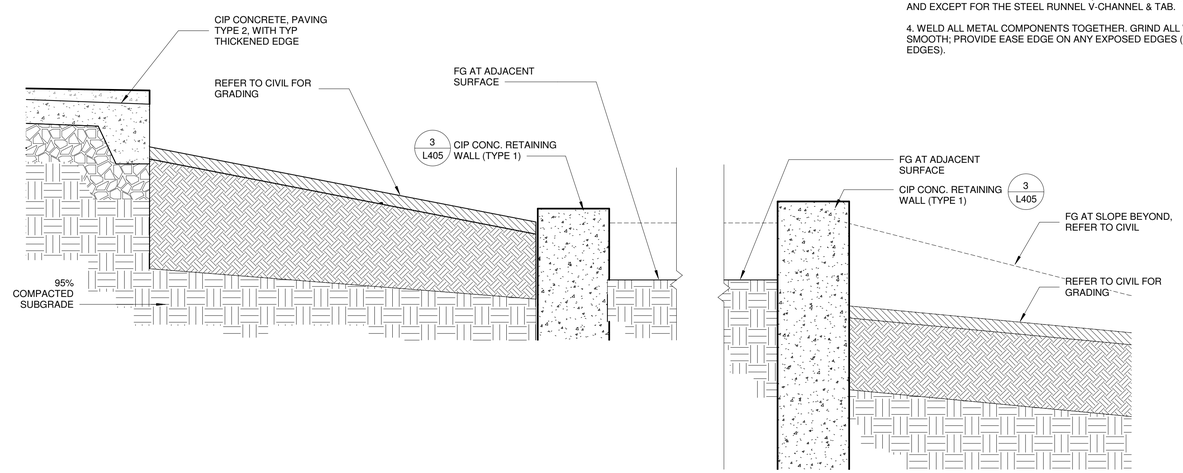

2 LAKESIDE WALLS SECTION
1" = 1'-0"

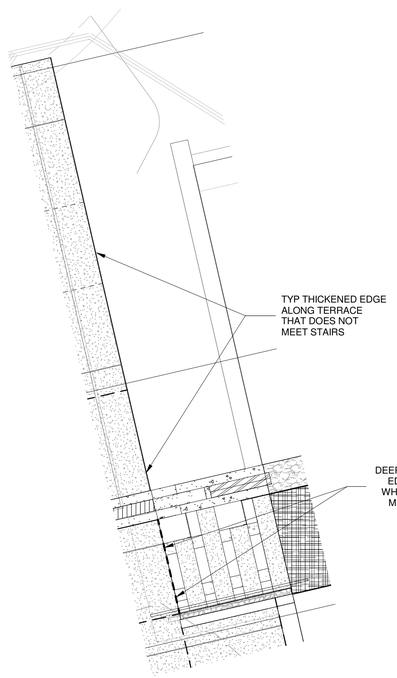

5 LAKESIDE TERRACE TO STAIRS PLAN VIEW
1/4" = 1'-0"

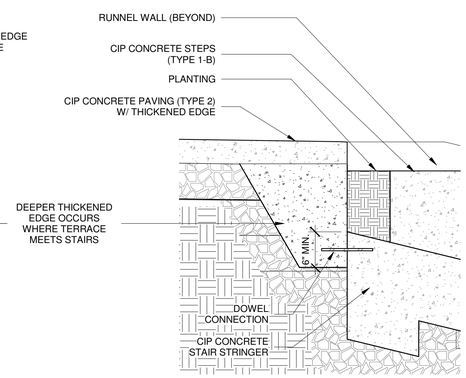

3 UPPER LAKESIDE STAIR TO TERRACE
1" = 1'-0"

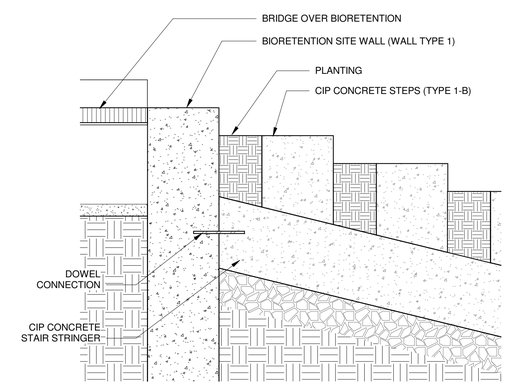

4 LOWER LAKESIDE STAIR TO BIORETENTION WALL
1" = 1'-0"

MILLER HULL
The Miller Hull Partnership, LLP
Architecture and Planning
Polson Building
71 Columbia, Sixth Floor
Seattle, WA 98104

Phone: 206.682.6837
Contact: Name

PARTNERSHIP berger

STAMP

STATE OF WASHINGTON
JONATHAN D. MORLEY
NO. 736 EXP. 2/21/2023
LANDSCAPE ARCHITECT

MERCER ISLAND
REVIEWED FOR CODE COMPLIANCE
March 27, 2023
SITE COPY
WASHINGTON

MERCER ISLAND HOUSE: CASCADE

6838 96th Ave SE
Mercer Island, WA 90840

SUBMITTAL

100% CONSTRUCTION DOCUMENTS

FEBRUARY 24, 2023

REVISIONS

No.	Description	Date

Drawn: JM / SL / CA / SM
Checked: JM / SL / CA
M|H Proj No.: A20.0085.00

Issue Date: FEBRUARY 24, 2023

SHEET

SITE DETAILS
L406

ECA WALL JOINTING LEGEND

SCORE JOINT

FOR JOINTING DETAILS, REF 8 / L401

GRADING LEGEND:

FG FINISH GRADE

TW TOP OF WALL

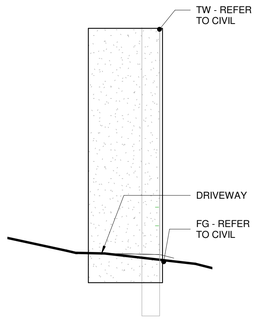

1 SEC-ELEV-A JOINT.
1/2" = 1'-0"

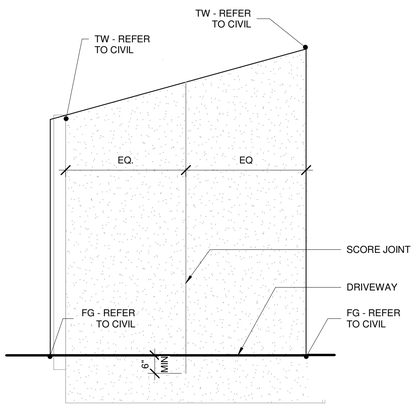

2 ECA SITE WALL-B JOINTING
1/2" = 1'-0"

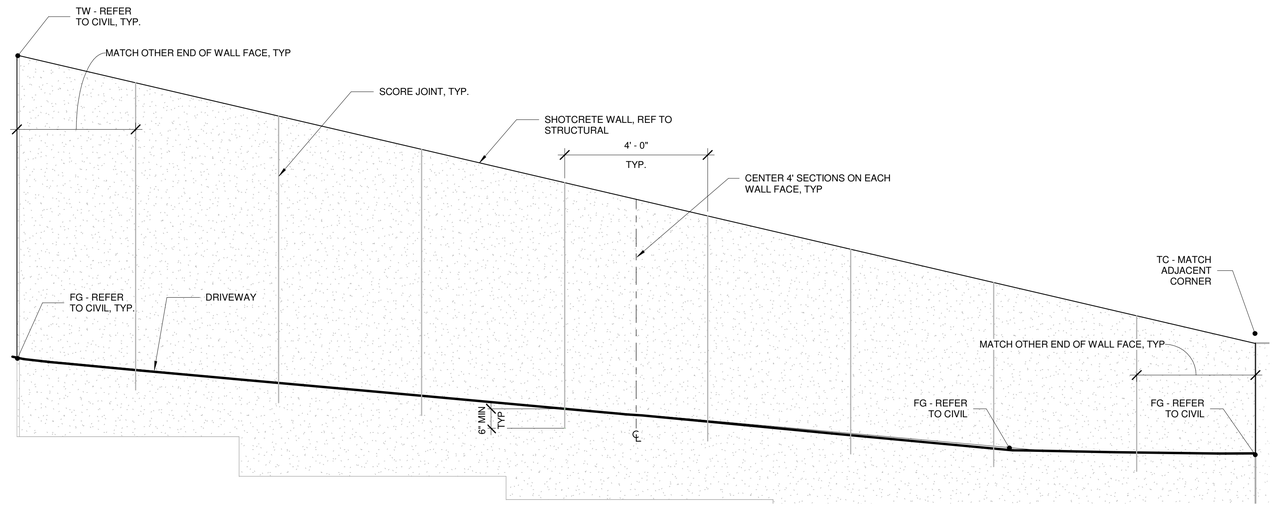

3 ECA SITE WALL-C JOINTING
1/2" = 1'-0"

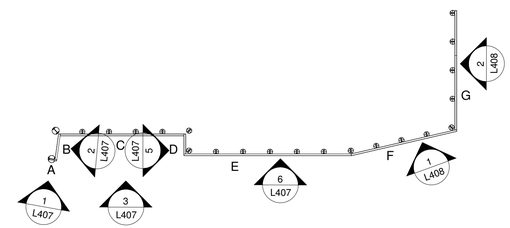

4 ECA WALL ELEVATION KEY MAP
1" = 20'-0"

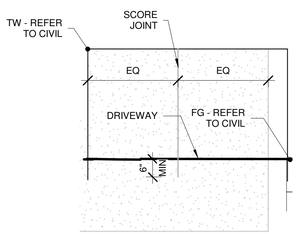

5 SEC-ELEV-D JOINT.
1/2" = 1'-0"

NOTE:
MATERIAL CALLOUTS & DIMENSIONS ON THIS DRAWING APPLY TO OTHERS ON THIS PAGE (UNLESS OTHERWISE NOTED).

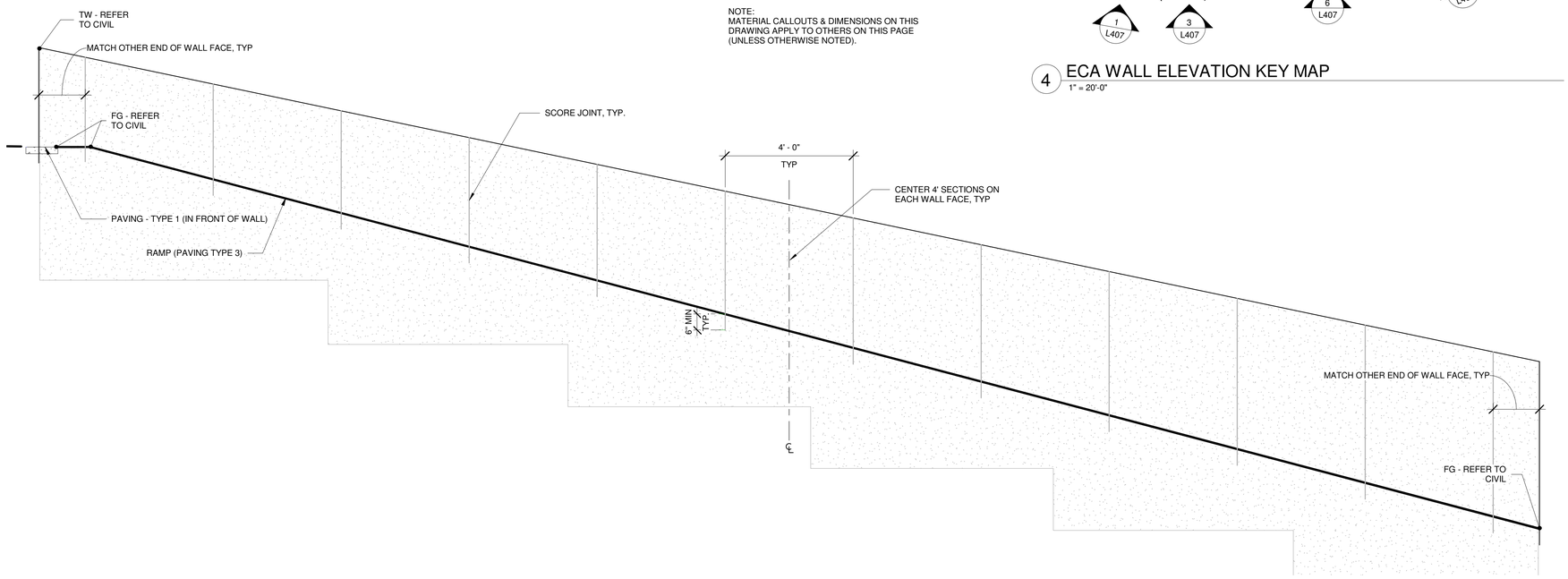

6 ECA SITE WALL-E JOINTING
1/2" = 1'-0"

MILLER HULL

The Miller Hull Partnership, LLP
Architecture and Planning
Polson Building
71 Columbia, Sixth Floor
Seattle, WA 98104

Phone: 206.682.6837
Contact: Name

PARTNERSHIP berger

STAMP

MERCER ISLAND HOUSE: CASCADE

6838 96th Ave SE
Mercer Island, WA 90840

SUBMITTAL

100% CONSTRUCTION DOCUMENTS

FEBRUARY 24, 2023

REVISIONS

No.	Description	Date

Drawn: JM / SL / CA / SM
Checked: JM / SL / CA
M|H Proj No.: A20.0085.00

Issue Date: FEBRUARY 24, 2023

SHEET

SITE DETAILS - ECA WALL

L407

ECA WALL JOINTING LEGEND

SCORE JOINT

FOR JOINTING DETAILS, REF 8 / L401

GRADING LEGEND:

FG FINISH GRADE

TW TOP OF WALL

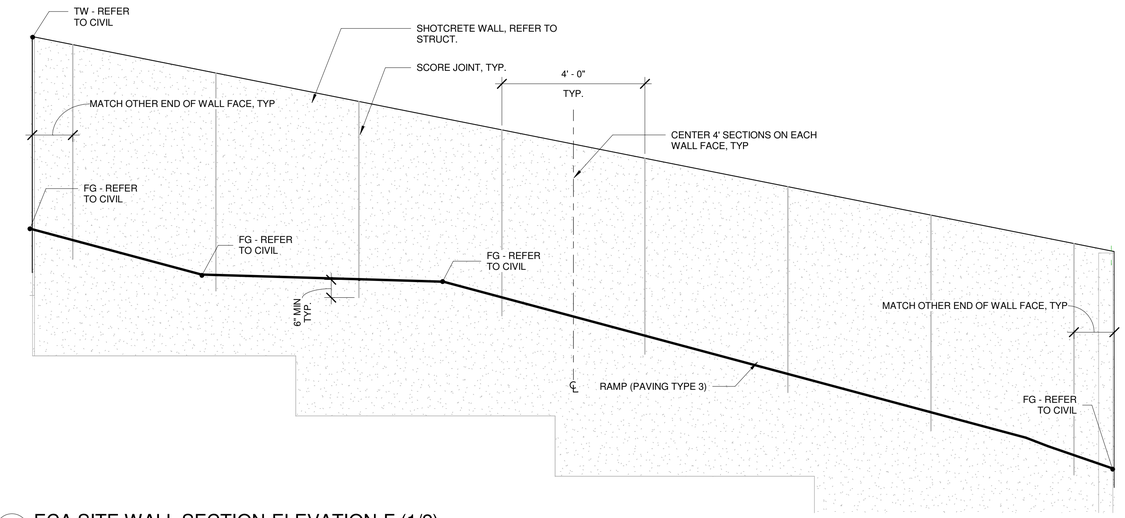

1 ECA SITE WALL SECTION-ELEVATION-F (1/2)
1/2" = 1'-0"

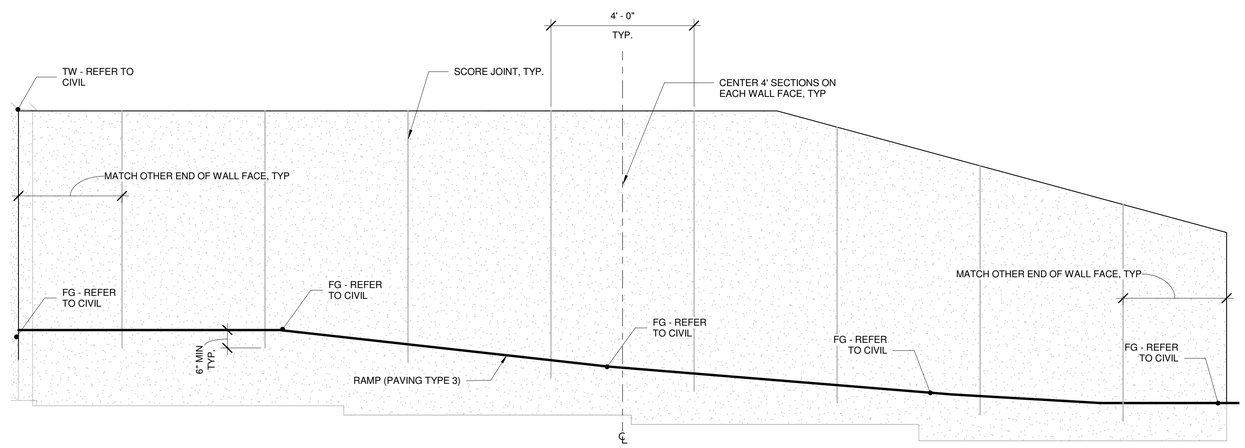

2 ECA SITE WALL SECTION-ELEVATION-G (1/2)
1/2" = 1'-0"

MILLER HULL

The Miller Hull Partnership, LLP
Architecture and Planning

Polson Building
71 Columbia, Sixth Floor
Seattle, WA 98104

Phone: 206.682.6837
Contact: Name

PARTNERSHIP berger

STAMP

STATE OF WASHINGTON
JONATHAN D. MORLEY
NO. 736 EXP. 2/21/2023
LANDSCAPE ARCHITECT

REVIEWED FOR CODE COMPLIANCE
March 27, 2023
SITE COPY

MERCER ISLAND HOUSE: CASCADE

6838 96th Ave SE
Mercer Island, WA 90840

SUBMITTAL

100% CONSTRUCTION DOCUMENTS

FEBRUARY 24, 2023

REVISIONS

No.	Description	Date

Drawn: JM / SL / CA / SM
Checked: JM / SL / CA
M|H Proj No.: A20.0085.00

Issue Date: FEBRUARY 24, 2023

SHEET

SITE DETAILS - ECA WALL

L408

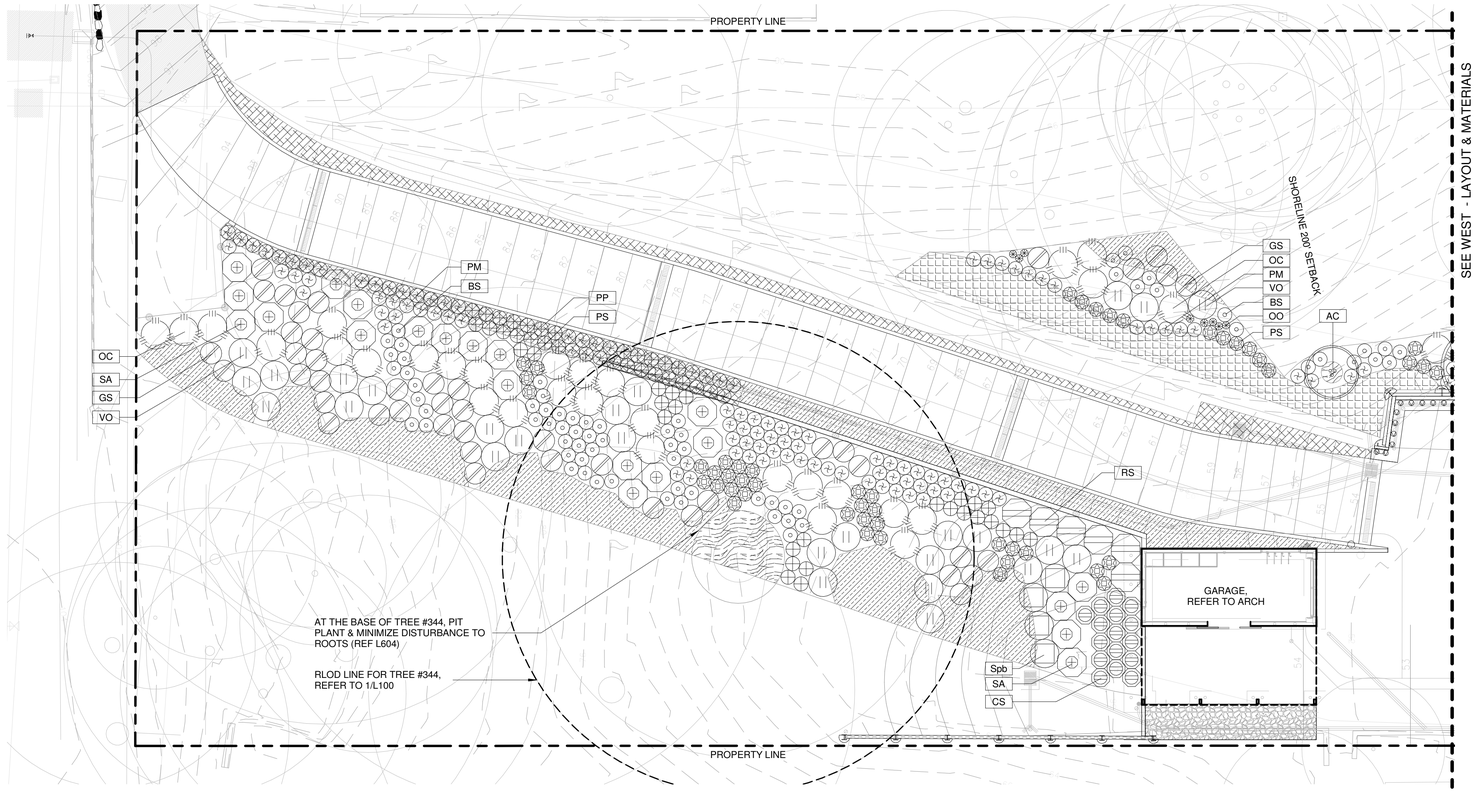

1 WEST - PLANTING
1" = 10'-0"

NOTES:

1. REFER TO SHEET L604 FOR COMPLETE PLANTING SCHEDULE

2. REFER TO 3/G-200 FOR INVASIVE SPECIES REMOVAL ONSITE. IN ADDITION TO REMOVING ALL AT-GRADE INVASIVE PLANTS, REMOVE ALL INVASIVE CLIMBERS AND VINES AS HIGH AS POSSIBLE (IVY, WISTERIA, ETC.)

3. REFER TO 1/G-200 FOR LANDSCAPE / HARDSCAPE CALCULATIONS

TREE LEGEND	
Type Mark	Species Name
AC	ACER CIRCINATUM
AMM	ACER MACROPHYLLUM
AM	ARBUTUS MENZIESEII
HIJ	HAMMEMELIS INTERMEDIA X 'JELENA'
MA	MAGNOLIA SP

PLANT LEGEND	
Type Mark	Species Name
AM	ACHILLEA MILLEFOLIUM
ACo	ARCTOSPTAPHYLOS COLUMBIANA
AVs	ARCTOSTAPHYLOS UVA URSI
ACu	ASARUM CAUDATUM
AAw	ASTILBE ARENDSII 'WHITE GLORIA'
ACw	ASTILBE CHINENSIS 'VISIONS IN PURPLE'
BS	BLECHNUM SPICANT
BG	BOUTELOUA GRACILIS 'BLONDE AMBITION'
CD	CAREX DEWEYANA
CDK	CAREX DOLICHOSTACHYA 'KAGA-NISHIKI' GOLD FOUNTAINS
CT	CHOISYA TERNATA 'LICH' SUNDANCE
CC	CIMICIFUGA CHOCOHOLIC
CS	CORNUS SERICEA 'KELSEYI'
DC	DESCHAMPSIA CESPITOSA
DS	DICENTRA SPECTABILIS
EG	EPIMEDIUM X RUBRUM 'GALADRIEL'
EO	EPIMEDIUM X WARLEYENSE 'ORANGE QUEEN'
EH	EQUISETUM HYEMALE
GS	GAULTHERIA SHALLON
HM	HAKONECHLOA MACRA
Hpp	HELLEBORUS 'PIPPA'S PURPLE'
HQM	HYDRANGEA QUERCIFOLIA 'MUCHKIN'
IS	IRIS SIBIRICA
IT	IRIS TENAX
JE	JUNCUS EFFUSUS
MN	MAHONIA NERVOSA
NT	NASSELLA TENUISSIMA
OC	OEMLARIA CERASIFORMIS
OO	OXALIS OREGANA
PV	PANICUM VIRGATUM BROTHERS'
PT	PARTHENOCISSUS TRICUSPIDATA
Pr	PENSTEMON 'RAVEN'
PM	POLYSTICHUM MUNITUM
PP	POLYSTICHUM POLYBLEPHARUM
PS	POLYSTICHUM SETIFERUM
RU	RHAPHIOLEPIS UMBELLATA 'MINOR'
RS	RIBES SANGUINEUM
RR	ROSA RUGOSA
SW	SALVIA NEMOROSA 'WESUWE'
SH	SARCOCOCCA CONFUSA
Spb	SYMPHORICARPOS 'PROUD BERRY'
SA	SYMPHORICARPUS ALBUS
TG	TELLIMA GRANDIFLORA
TC	TIARELLA CORDIFOLIA 'SUGAR AND SPICE'
VO	VACCINIUM OVATUM
VH	VANCOUVERIA HEXANDRA
VB	VERBENA BONARIENSIS

PLANTING MIX & MULCH LEGEND

- ARCTOSTAPHYLOS UVA URSI (Kinnikinnick 4" POT @ 18" O.C.)
- GROUNDCOVER MIX 1 : 40% Fragaria chiloensis + 60% Sedum oreganum (4" POT 18 O.C. TRIANGULAR SPACING)
- GROUNDCOVER MIX 2 : 70% Deschamspia cespitosa, 15% Lupine, 15% Columbine (1 GAL 18" O.C. TRIANGULAR SPACING)
- GROUNDCOVER MIX 3: 50% RUBUS CALYCINOIDES, 50% ARCTOSTAPHYLOS UVA-URSI
- GROUNDCOVER MIX 4: 33.3% FRAGARIA CHILOENSIS, 33.3% ASARUM CAUDATUM, 33.3% ARCTOSTAPHYLOS UVA-URSI
- JUNCUS EFFUSUS - COMMON RUSH (1 GAL @ 24" O.C.)
- MULCH
- NO MOW GRASS (PT Lawn Seed - PT 702 Let It Bee - No Mow)
- POLLINATOR MEADOW (NW Meadowscapes - NW Prairie Seed Mix)
- SPINE STAIR PLANTING 50% CORSICAN MINT, 50% BRASS BUTTONS

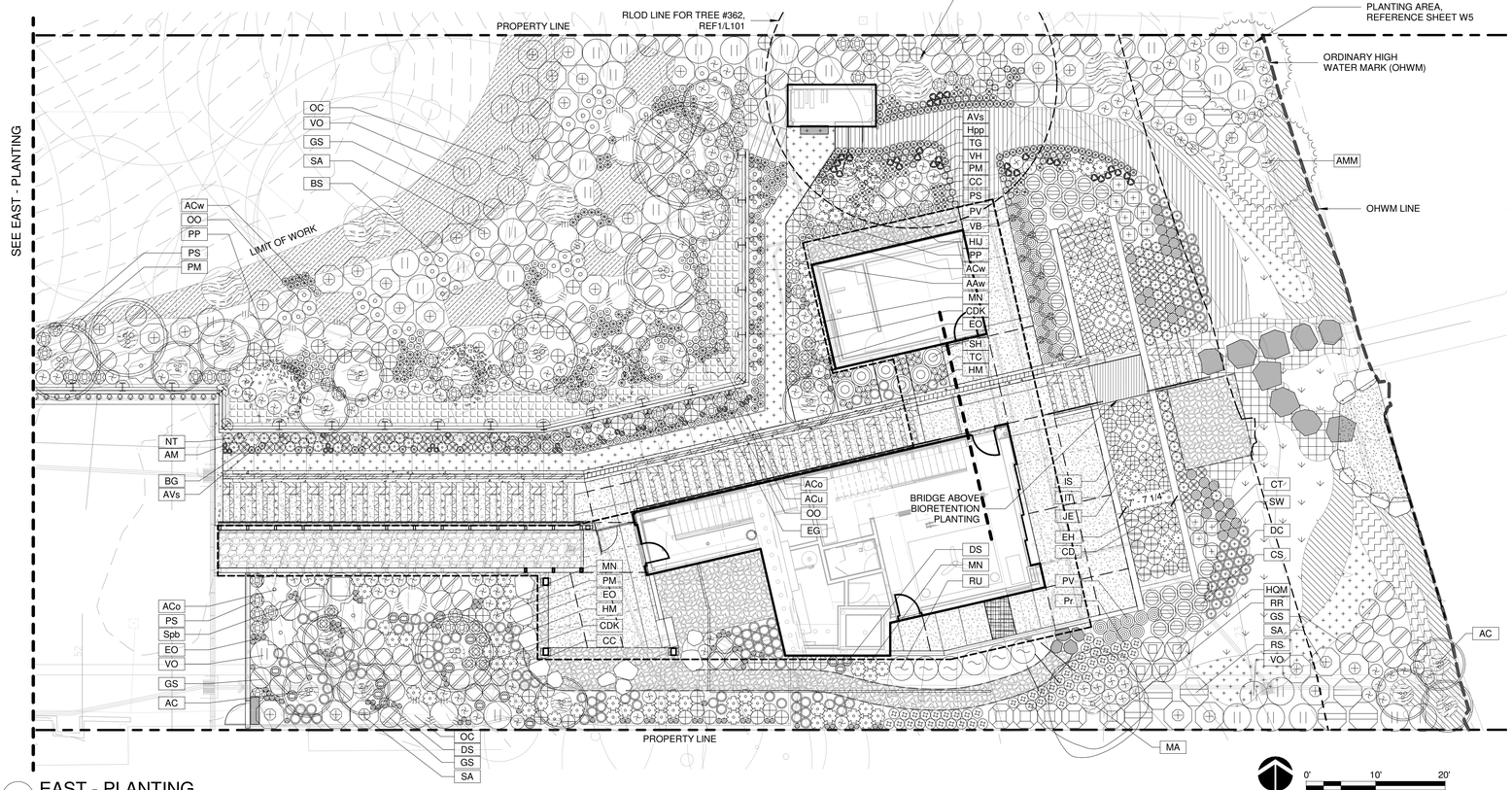

2 EAST - PLANTING
1" = 10'-0"

NORTH SCALE: 1"= 10'-0"

MILLER HULL
The Miller Hull Partnership, LLP
Architecture and Planning
Polson Building
71 Columbia, Sixth Floor
Seattle, WA 98104

Phone: 206.682.6837
Contact: Name

PARTNERSHIP berger

STAMP

STATE OF WASHINGTON
JONATHAN D. MORLEY
NO. 236 EXP. 2/21/2023
LANDSCAPE ARCHITECT

REVIEWED FOR CODE COMPLIANCE
March 27, 2023
SITE COPY

MERCER ISLAND HOUSE: CASCADE

6838 96th Ave SE
Mercer Island, WA 90840

SUBMITTAL

100% CONSTRUCTION DOCUMENTS

FEBRUARY 24, 2023

REVISIONS

No.	Description	Date

Drawn: JM / SL / CA / SM
Checked: JM / SL / CA
M|H Proj No.: A20.0085.00

Issue Date: FEBRUARY 24, 2023

SHEET

PLANTING PLAN
L601

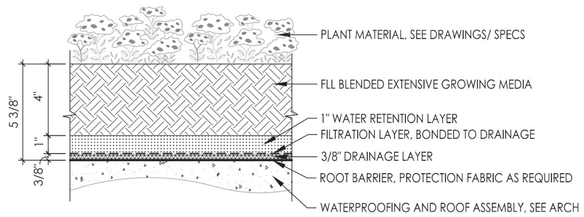

NOTE:
1. SYSTEM COMPONENTS ARE SHOWN AT NOMINAL SIZE, COMPRESSION WILL OCCUR AT RETENTION LAYER BASED ON AMOUNT (HEIGHT/VOLUME) OF GROWING MEDIA PLACED ON SYSTEM. MAXIMUM COMPRESSION ⅛" ±.

COLUMBIA GREEN TECHNOLOGIES	LGR1.01b	4" DEPTH EXTENSIVE LAYERED GREEN ROOF		
		LAYERED SYSTEM	DETAIL SCALE: 3"=1'-0"	

Corporate Office: 79 SE Taylor Street, Suite 201 Portland, OR 97214
Telephone: (503) 327-8723 · www.columbia-green.com

1 GREEN ROOF, 4" DEPTH
1 1/2" = 1'-0"

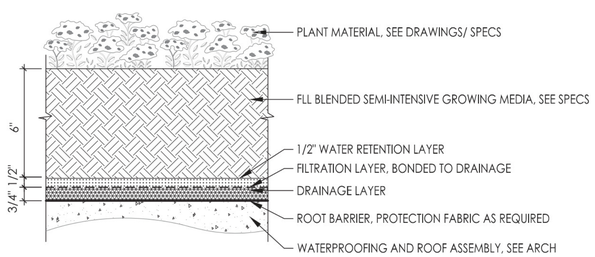

NOTE:
1. SYSTEM COMPONENTS ARE SHOWN AT NOMINAL SIZE, COMPRESSION WILL OCCUR AT RETENTION LAYER BASED ON AMOUNT (HEIGHT/VOLUME) OF GROWING MEDIA PLACED ON SYSTEM. MAXIMUM COMPRESSION ⅛" ±.

COLUMBIA GREEN TECHNOLOGIES	LGR1.02a	6" DEPTH SEMI-INTENSIVE LAYERED GREEN ROOF		
		LAYERED SYSTEM	DETAIL SCALE: 3"=1'-0"	

Corporate Office: 79 SE Taylor Street, Suite 201 Portland, OR 97214
Telephone: (503) 327-8723 · www.columbia-green.com

3 GREEN ROOF, 6" DEPTH
1 1/2" = 1'-0"

PLANTING MIX & MULCH LEGEND

HERB PLANTING

SEDUM

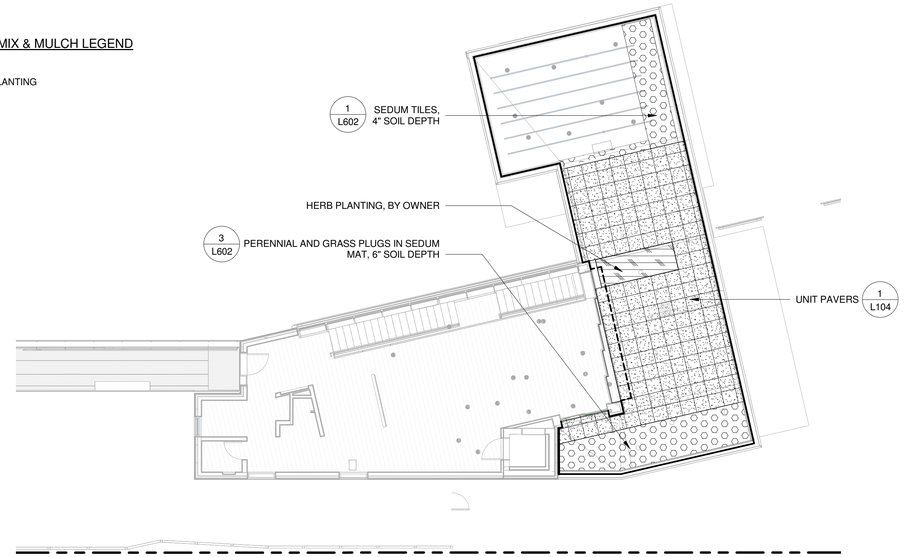

2 ROOF PLANTING
1" = 10'-0"

MILLER HULL
The Miller Hull Partnership, LLP
Architecture and Planning
Polson Building
71 Columbia, Sixth Floor
Seattle, WA 98104

Phone: 206.682.6837
Contact: Name

PARTNERSHIP berger

STAMP

STATE OF WASHINGTON
JONATHAN D. MORLEY
NO. 736 EXP. 2/21/2023
LANDSCAPE ARCHITECT

REVIEWED FOR CODE COMPLIANCE
March 27, 2023
SITE COPY

MERCER ISLAND HOUSE: CASCADE

6838 96th Ave SE
Mercer Island, WA 90840

SUBMITTAL

100% CONSTRUCTION DOCUMENTS

FEBRUARY 24, 2023

REVISIONS

No.	Description	Date

Drawn: JM / SL / CA / SM
Checked: JM / SL / CA
M|H Proj No.: A20.0085.00

Issue Date: FEBRUARY 24, 2023

SHEET

ROOF PLANTING PLAN & DETAILS

L602

TREE SCHEDULE

SYMBOL	TYPE MARK	QTY	BOTANICAL NAME	COMMON NAME	SIZE	SPACING
	AC	16	ACER CIRCINATUM	VINE MAPLE	MULTI-TRUNK; 3 STEMS; 1.5" CAL. MIN. EACH; 7-9' HT. MIN.	AS SHOWN
	AC	5	ACER CIRCINATUM	VINE MAPLE	MULTI-TRUNK; 3 STEMS; 2" CAL. MIN. EACH; 10-12' HT. MIN.	AS SHOWN
	AMM	2	ACER MACROPHYLLUM	BIG LEAF MAPLE	1.5" CAL.; 6-8' HT. MIN., SINGLE TRUNK	AS SHOWN
	AM	1	ARBUTUS MENZIESEII	PACIFIC MADRONE	1.5" CAL.; 6-8' HT. MIN.	AS SHOWN
	MA	1	MAGNOLIA SP	MAGNOLIA	3.5" CAL. MIN. TO BE SELECTED BY LANDSCAPE ARCHITECT AT NURSERY	AS SHOWN

PLANTING MIX SCHEDULE

ARCTOSTAPHYLLOS UVA URSI | KINNIKINNICK

(399 SF)

4" POT @ 18" O.C., TRIANGULAR SPACING

GROUNDCOVER MIX 1: 40% FRAGARIA CHILOENSIS, 60% SEDUM OREGANUM

(166 SF)

4" POT @ 18" O.C., TRIANGULAR SPACING

GROUNDCOVER MIX 2: 70% DESCHAMPSIA CESPITOSA, 15% LUPINUS POLYPHYLLUS, 15% AQUILEGIA FORMOSA

(239 SF)

1 GAL. @ 18" O.C., TRIANGULAR SPACING

GROUNDCOVER MIX 3: 50% RUBUS CALYCINOIDES, 50% ARCTOSTAPHYLOS UVA-URSI

(655 SF)

1 GAL. @ 18" O.C., TRIANGULAR SPACING

GROUNDCOVER MIX 4: 33.3% FRAGARIA CHILOENSIS, 33.3% ASARUM CAUDATUM, 33.3% ARCTOSTAPHYLOS UVA-URSI

(1684 SF)

4" POTS, @ 18" O.C., TRIANGULAR SPACING

SPINE STAIR PLANTING 50% CORSICAN MINT, 50% BRASS BUTTONS

(277 SF)

4" POTS, @ 8" O.C., TRIANGULAR SPACING

JUNCUS EFFUSUS | COMMON RUSH

(193 SF)

1 GAL. @ 24" O.C., TRIANGULAR SPACING

POLLINATOR MEADOW MIX

(443 SF)

NW MEADOWSCAPES, NW PAIRIE MIX

NO MOW GRASS

(392 SF)

PT LAWN SEED, PT-702 'LET IT BEE' NO MOW MIX

MULCH

(450 SF)

SEE SPEC

SEDUM GREEN ROOF

(228 SF)

COLUMBIA GREEN - TUFF STUFF SEDUM MIX

HERB PLANTING (ROOF TERRRACE)

(43 SF)

SHRUB, GRASS & PERENNIAL SCHEDULE

SYMBOL	TYPE MARK	QTY	BOTANICAL NAME	COMMON NAME	SIZE
	AM	9	ACHILLEA MILLEFOLIUM	YARROW	1 GAL
	ACo	6	ARCTOSPTAPHYLOS COLUMBIANA	HAIRY MANZANITA	5 GAL.
	AVs	99	ARCTOSTAPHYLOS UVA URSI	KINNIKINNICK	1 GAL
	ACu	27	ASARUM CAUDATUM	WILD GINGER	1 GAL
	AAw	4	ASTILBE ARENDSII 'WHITE GLORIA'	WHITE ASTILBE	1 GAL
	ACw	93	ASTILBE CHINENSIS 'VISIONS IN PURPLE'	PURPLE CHINESE ASTILBE	1 GAL
	BS	116	BLECHNUM SPICANT	DEER FERN	3 GAL
	BG	42	BOUTELOUA GRACILIS 'BLONDE AMBITION'	BLONDE AMBITION BLUE GRAMA GRASS	1 GAL
	CD	26	CAREX DEWEYANA	DEWEY'S SEDGE	1 GAL
	CDK	21	CAREX DOLICHOSTACHYA 'KAGA-NISHIKI' GOLD FOUNTAINS	Japanese Sedge	1 GAL
	CT	11	CHOISYA TERNATA 'LICH' SUNDANCE	MEXICAN ORANGE BLOSSOM	3 GAL
	CC	15	CIMICIFUGA CHOCOHOLIC	BLACK SNAKEROOT	1 GAL
	CS	46	CORNUS SERICEA 'KELSEYI'	KELSEY DOGWOOD	3 GAL
	DC	51	DESCHAMPSIA CESPITOSA	TUFTED HAIRGRASS	1 GAL
	DS	16	DICENTRA SPECTABILIS	BLEEDING HEART	1 GAL
	EG	17	EPIMEDIUM X RUBRUM 'GALADRIEL'	BARRENWORT - RED	1 GAL
	EO	132	EPIMEDIUM X WARLEYENSE 'ORANGE QUEEN'	BARRENWORT - ORANGE	1 GAL
	EH	15	EQUISETUM HYEMALE	SCOURING RUSH	1 GAL
	GS	157	GAULTHERIA SHALLON	SALAL	1 GAL
	HM	89	HAKONECHLOA MACRA	JAPANESE FOREST GRASS	1 GAL
	Hpp	34	HELLEBORUS 'PIPPA'S PURPLE'	LENTEN ROSE	1 GAL
	HQM	4	HYDRANGEA QUERCIFOLIA 'MUCHKIN'	MUNCKIN HYDRANGEA	3 GAL

SHRUB, GRASS & PERENNIAL SCHEDULE

SYMBOL	TYPE MARK	QTY	BOTANICAL NAME	COMMON NAME	SIZE
	IS	10	IRIS SIBIRICA	SIBERIAN IRIS	1 GAL
	IT	12	IRIS TENAX	TOUGH-LEAF IRIS	1 GAL
	JE	31	JUNCUS EFFUSUS	COMMON RUSH	1 GAL
	MN	71	MAHONIA NERVOSA	DULL OREGON GRAPE	1 GAL
	NT	58	NASSELLA TENUISSIMA	MEXICAN FEATHER GRASS	1 GAL
	OC	45	OEMLARIA CERASIFORMIS	INDIAN PLUM	3 GAL
	OO	159	OXALIS OREGANA	RED SORREL	1 GAL
	PV	32	PANICUM VIRGATUM BROTHERS'	RED SWITCH GRASS	1 GAL
	PT	49	PARTHENOCISSUS TRICUSPIDATA	BOSTON IVY	1 GAL
	Pr	51	PENSTEMON 'RAVEN'	PENSTEMON	1 GAL
	PM	259	POLYSTICHUM MUNITUM	WESTERN SWORD FERN	1 GAL
	PP	123	POLYSTICHUM POLYBLEPHARUM	TASSEL FERN	1 GAL
	PS	138	POLYSTICHUM SETIFERUM	ALASKA FERN	3 GAL

MILLER HULL

The Miller Hull Partnership, LLP
Architecture and Planning
Polson Building
71 Columbia, Sixth Floor
Seattle, WA 98104

Phone: 206.682.6837
Contact: Name

PARTNERSHIP berger

STAMP

STATE OF WASHINGTON
JONATHAN D. MORLEY
NO. 736 EXP. 2/21/2023
LANDSCAPE ARCHITECT

MERCER ISLAND
REVIEWED FOR CODE COMPLIANCE
March 27, 2023
SITE COPY
BUILDING

MERCER ISLAND HOUSE: CASCADE

6838 96th Ave SE
Mercer Island, WA 90840

SUBMITTAL

100% CONSTRUCTION DOCUMENTS

FEBRUARY 24, 2023

REVISIONS

No.	Description	Date

Drawn: Author
Checked: Checker
M|H Proj No.: A20.0085.00

Issue Date: FEBRUARY 24, 2023

SHEET

PLANTING SCHEDULE

L603

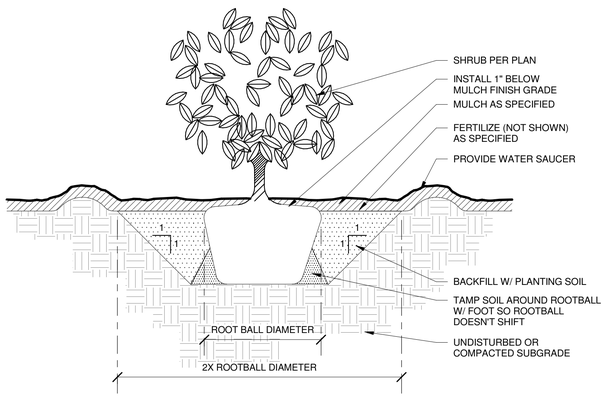

1 PLANTING - SHRUB
1" = 1'-0"

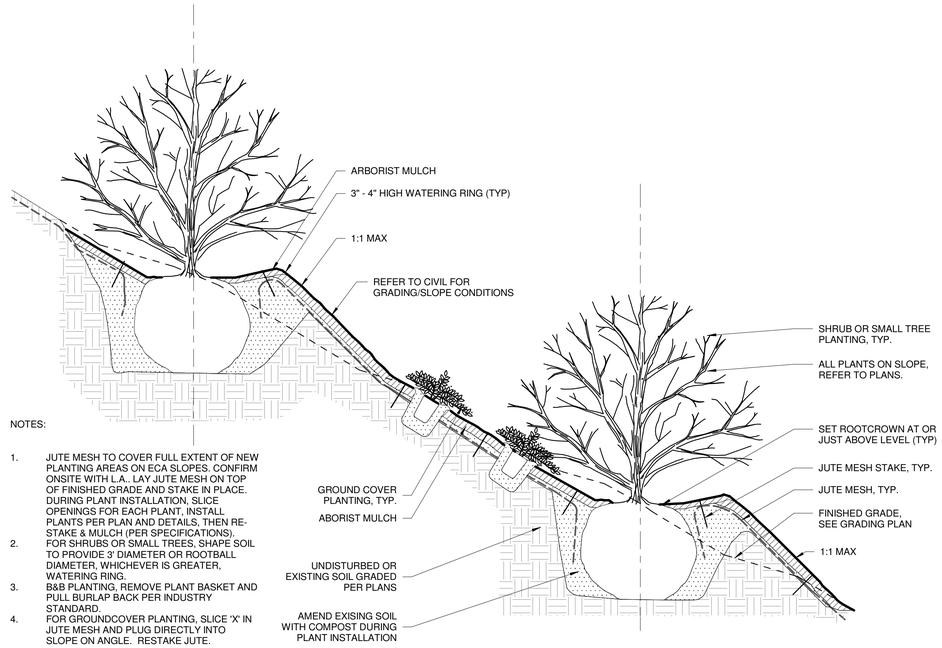

NOTES:

1. JUTE MESH TO COVER FULL EXTENT OF NEW PLANTING AREAS ON ECA SLOPES. CONFIRM ONSITE WITH L.A.. LAY JUTE MESH ON TOP OF FINISHED GRADE AND STAKE IN PLACE. DURING PLANT INSTALLATION, SLICE OPENINGS FOR EACH PLANT, INSTALL PLANTS PER PLAN AND DETAILS, THEN RE-STAKE & MULCH (PER SPECIFICATIONS).
2. FOR SHRUBS OR SMALL TREES, SHAPE SOIL TO PROVIDE 3' DIAMETER OR ROOTBALL DIAMETER, WHICHEVER IS GREATER, WATERING RING.
3. B&B PLANTING, REMOVE PLANT BASKET AND PULL BURLAP BACK PER INDUSTRY STANDARD.
4. FOR GROUNDCOVER PLANTING, SLICE 'X' IN JUTE MESH AND PLUG DIRECTLY INTO SLOPE ON ANGLE. RESTAKE JUTE.

2 PLANTING ON A SLOPE
1/2" = 1'-0"

LANDSCAPE MANAGEMENT SCHEDULE

The following is a recommended monthly landscape maintenance schedule that can be performed by the Owners or a landscape maintenance company.

January
- Prune any tree branches damaged by winter storms or pose a safety concern. Prune shade trees yearly to encourage strong upward growth. Do not top trees.

February
- Weed planting beds weekly. Apply an organic non –toxic granular fertilizer around trees or shrubs in late February. Make application prior to a moderate rainfall so the fertilizer will be absorbed.
- Add new mulch to planters where the mulch depth has been reduced to less than 2 inches (5 cm) thick. Mulch not required where shrubs or groundcover completely hide the soil surface from view.

March
- Weed planting beds weekly. Flush out irrigation systems as needed, run and check for proper operation of each valve zone. Test sensors (rain, soil, or weather sensors).
- Remove and clean WYE filter screens.
- Clean or replace plugged sprinkler nozzles. Replace plugged drip emitters.
- Replace irrigation controller program back-up batteries.

April
- Weed planting beds weekly. Fertilize all landscape areas using non-toxic organic fertilizers. The fertilization of shrubs/groundcover areas may be eliminated when the plants reach maturity or completely fill the planters, without space between them.
- Add new mulch to planters where the mulch depth has been reduced to less than 2 inches (5 cm) thick. Mulch not required where shrubs or groundcover completely hide the soil surface from view.

May
- Weed planting beds weekly. Turn on irrigation system, run and visually inspect for proper zone coverage. Set ET-based, weather or soil sensor-based, or seasonal programs to adjust irrigation up in July-August, and down for May-June and September.

June
- Weed planting beds weekly. Prune spring & winter-flowering shrubs as needed to maintain proper shape – do not shear.
- Add new mulch to planters where the mulch depth has been reduced to less than 2 inches (5 cm) thick. Mulch not required where shrubs or groundcover completely hide the soil surface from view.
- Prune perennials back to ground level as soon as leaf blades yellow and wilt (June-Oct. depending on type, refer to schedule attached).

July
- Weed planting beds weekly. Re-stake or re-direct vines to trellis until established.
- Prune vines as needed to keep out of window recesses or if vines are extending above the first story (12 feet above street level).

August
- Weed planting beds weekly. Add new mulch to planters where the mulch depth has been reduced to less than 2 inches (5 cm) thick. Mulch not required where shrubs or groundcover completely hide the soil surface from view.

September
- Weed planting beds weekly. Fertilize all landscape areas using non-toxic organic fertilizer. September or early October. The fertilization of shrubs/groundcover areas may be eliminated when the plants reach maturity or completely fill the planters, without space between them. Written authorization from the owner's representative is required before the fertilization may be eliminated from the required work.
- Inventory all plant materials. Inventory shall include an exact count of all shrubs and trees, itemized by planter. Replace any dead or missing plants species as indicated on as built drawings.
- Prune perennials back to ground level as soon as leaf blades yellow and wilt (from June through October, depending on bulb type, refer to attached schedule). Maintain 2 inches of mulch on ground surface over bulbs to insulate from cold and prevent winter weed growth.

October
- Weed planting beds weekly. Have backflow preventer (on irrigation water supply) tested by approved plumbing technician.
- Turn off and prepare irrigation system for winter. Make sure backflow preventer is well-insulated or drained prior to first freeze. Blow out pipes using compressed air in areas where freezing could result in breakage. Drain drip irrigation lines as recommended by manufacturer. Any winter damage to irrigation system due to insufficient winterization shall be the responsibility of the contractor to repair.
- Add new mulch to planters and swale where the mulch depth has been reduced to less than 2 inches (5 cm) thick. Mulch additions are not required where shrubs or groundcover completely hide the soil surface from view.

November
- Add new mulch to planters and swale where the mulch depth has been reduced to less than 2 inches (5 cm) thick. Mulch additions are not required where shrubs or groundcover completely hide the soil surface from view.

December
- Prune trees yearly as needed to remove dead and crossing branches and to encourage spreading and upward growth that fits the available space. Do not top trees.
- Prune summer and fall-blooming shrubs as needed to maintain proper shape.

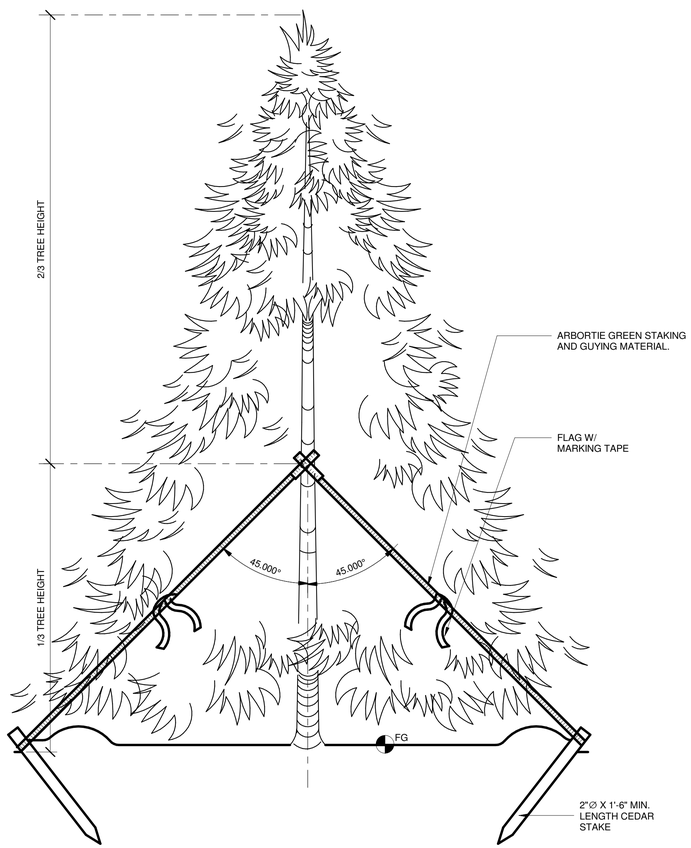

3 TREE GUYING - CONIFER
3/4" = 1'-0"

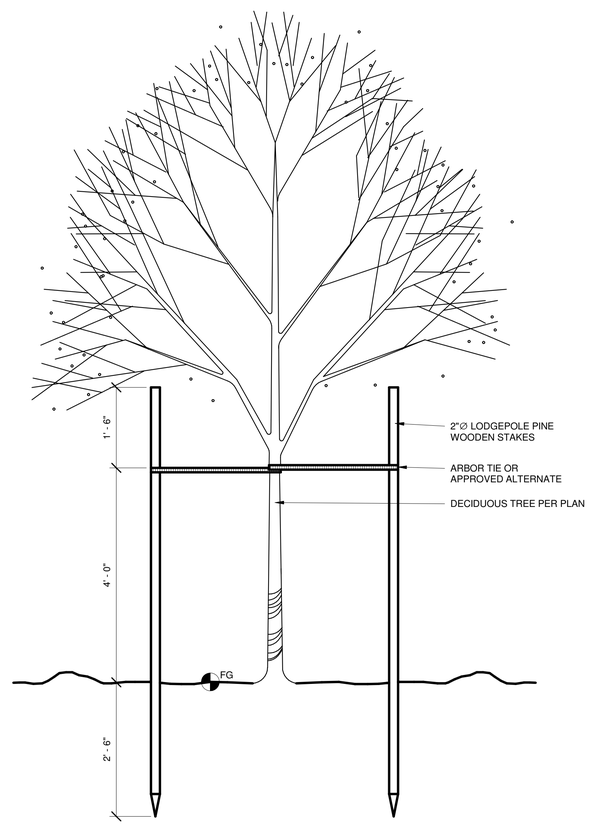

4 TREE STAKING - DECIDUOUS
3/4" = 1'-0"

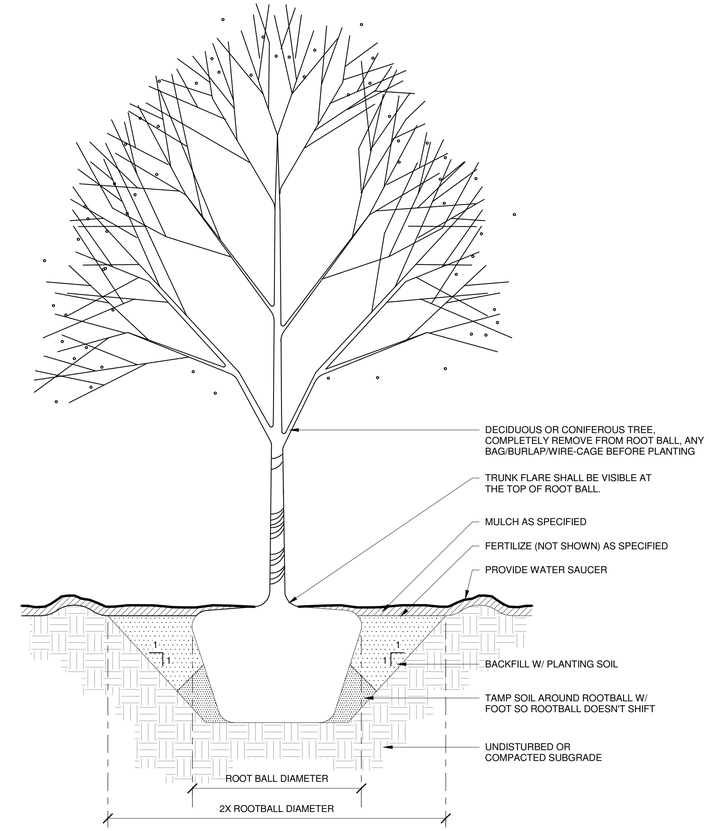

5 PLANTING - CONIFEROUS AND DECIDUOUS TREE
3/4" = 1'-0"

MILLER HULL
The Miller Hull Partnership, LLP
Architecture and Planning
Polson Building
71 Columbia, Sixth Floor
Seattle, WA 98104

Phone: 206.682.6837
Contact: Name

PARTNERSHIP berger

STAMP

STATE OF WASHINGTON
JONATHAN D. MORLEY
NO. 736 EXP. 2/21/2023
LANDSCAPE ARCHITECT

MERCER ISLAND
REVIEWED FOR CODE COMPLIANCE
March 27, 2023
SITE COPY
PLANNING

MERCER ISLAND HOUSE: CASCADE

6838 96th Ave SE
Mercer Island, WA 90840

SUBMITTAL

100% CONSTRUCTION DOCUMENTS

FEBRUARY 24, 2023

REVISIONS

No.	Description	Date
1	Building Permit Resubmittal	10/27/2022

Drawn: JM / SL / CA / SM
Checked: JM / SL / CA
M|H Proj No.: A20.0085.00
Issue Date: FEBRUARY 24, 2023

SHEET

PLANTING DETAILS
L604

PLANTING SOIL AMENDMENTS

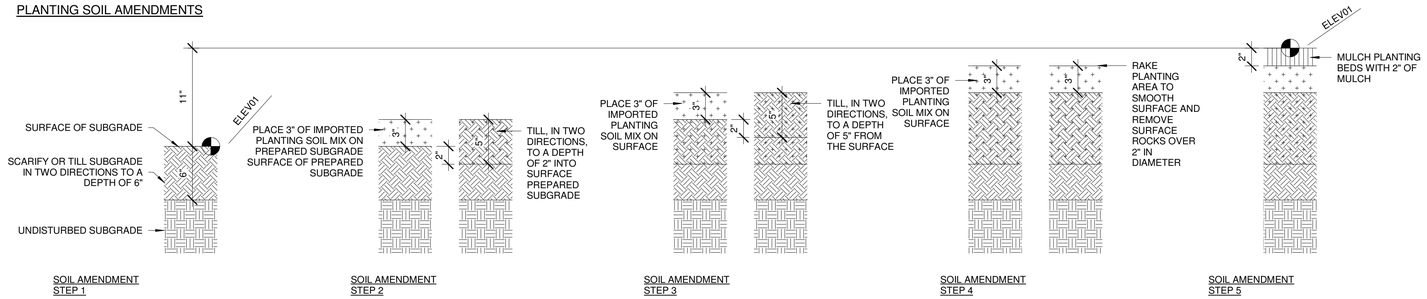

SEED MIX SOIL AMENDMENTS

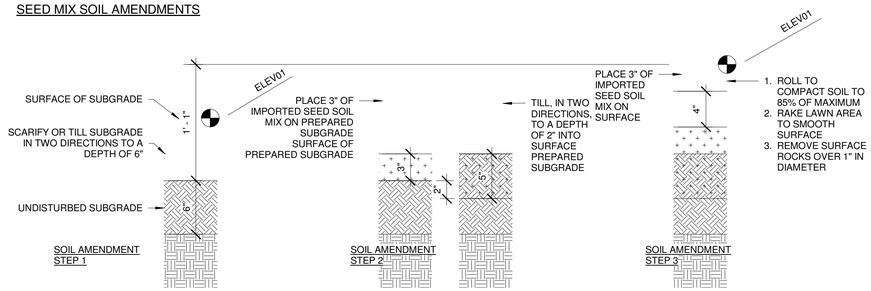

1 SOIL AMENDMENT DETAILS
1 1/2" = 1'-0"

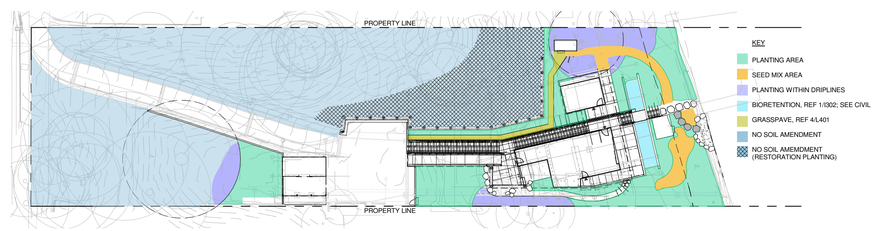

2 SOIL AMENDMENT DIAGRAM
1" = 40'-0"

GENERAL SOIL PREPARATION NOTES:

1. ALL PLANTING AREAS (EXCEPT ECA AREAS, TREE PROTECTION AREAS AND ANY AREAS WITHIN DRIPLINES OF EXISTING TREES TO REMAIN) TO RECEIVE 9" TOTAL DEPTH IMPORT TOPSOIL, PER SOIL AMENDMENT DIAGRAM (RIGHT).

2. REFER TO ECA, RESTORATION AREAS AND LIMITS OF DISTURBANCE NOTES BELOW FOR RESTRICTED SOIL PREPARATION WITHIN THESE AREAS.

3. REFER TO SPECS FOR SOIL MIXES.

4. ALL SCARIFICATION OR TILLING SHALL BE CONDUCTED IN TWO DIRECTIONS AT 90 DEGREES TO EACH OTHER.

ECA RESTORATION AREAS & LIMITS OF DISTURBANCE NOTES:

1. RESTORATION PLANTING AND SEEDING LIMITS ARE UNDETERMINED AND SUBJECT TO CHANGE BASED ON CITY OF MERCER ISLAND REQUIREMENTS AND ALLOWANCES

2. ASSUME ALL RESTORATION AREAS BE CLEARED OF NOXIOUS AND INVASIVE SPECIES AND PROPERLY DISOPOSED OF OFF SITE. ALSO REMOVE ANY UNWANTED ORNAMENTAL VEGETATION TAGGED BY THE LANDSCAPE ARCHITECT. REFER TO 1/G-200 FOR EXTENTS OF INVASIVE PLANT REMOVAL.

3. CONTRACTOR TO PROVIDE EROSION CONTROL AND TREE PROTECTION MEASURES. REFER TO CIVIL DRAWINGS. ALL ECA SLOPES TO BE PREPARED WITH STAKED JUTE MESH PRIOR TO PLANT INSTALLATION, SEE DETAIL 2/L603.

4. LIMIT FOOT TRAFFIC WITHIN THE ECA AND ASSOCIATED BUFFERS.

5. EQUIPMENT SHALL NOT BE USED OR STORED WITHIN THE ECA OR ASSOCIATED BUFFERS.

6. STORE NO MATERIALS OR DEBRIS WITHIN THE ECA OR ASSOCIATED BUFFERS.

7. PLANTING AND/OR SEEDING SHALL NOT BE DONE DURING WINDY WEATHER OR WHEN THE GROUND IS FROZEN, EXCESSIVELY WET OR UNTILLABLE. PLANTING WITHIN THE ECA TO BE INSTALLED IN THE FALL OR EARLY SPRING (IDEALLY OUTSIDE OF THE 'WET WEATHER SEASON' - OCTOBER 1ST THROUGH APRIL 1ST). PERMITS ARE REQUIRED FOR ANY WORK PERFORMED DURING THE 'WET WEATHER SEASON.' CONTRACTOR TO COORDINATE PERMIT WITH CITY OF MERCER ISLAND.

8. IN AREAS WITHIN THE RLOD (RECOMMEND LIMIT OF DISTURBANCE) FOR TREES, OR UNDER ANY RETAINED EXISTING TREE DRIPLINE WHERE SOILS MUST BE AMENDED TO SUPPORT NEW PLANTINGS, ALL SOIL PREPARATION AND AMENDMENT SHOULD BE LIMITED TO THE TOP 4-6", APPROVED BY THE PROJECT ARBORIST, AND DONE BY HAND METHODS ONLY. UNDER NO CIRCUMSTANCES SHALL SOILS BE EXCAVATED FROM WITHIN THE RLOD OF RETAINED TREES.

MILLER HULL
The Miller Hull Partnership, LLP
Architecture and Planning
Polson Building
71 Columbia, Sixth Floor
Seattle, WA 98104

Phone: 206.682.6837
Contact: Name

PARTNERSHIP berger

STAMP

MERCER ISLAND HOUSE: CASCADE

6838 96th Ave SE
Mercer Island, WA 90840

SUBMITTAL

100% CONSTRUCTION DOCUMENTS

FEBRUARY 24, 2023

REVISIONS

No.	Description	Date
1	Building Permit Resubmittal	10/27/2022

Drawn: JM / SL / CA / SM
Checked: JM / SL / CA
M|H Proj No.: A20.0085.00

Issue Date: FEBRUARY 24, 2023

SHEET

PLANTING SCHEDULE, DETAILS & NOTES

L605

GENERAL NOTES

1. IT IS THE INTENT OF THE CONTRACT DOCUMENTS THAT ALL WORK SHALL CONFORM TO THE APPLICABLE AND LATEST REQUIREMENTS OF THE NATIONAL, STATE AND LOCAL BUILDING CODES, AS WELL AS ALL RULES AND REGULATIONS OF JURISDICTIONS HAVING AUTHORITY.
2. PRIOR TO COMMENCEMENT OF ANY PORTION OF THE WORK, THE CONTRACTOR SHALL NOTIFY THE ARCHITECT OF ANY DISCREPANCIES NOTED AMONG OR BETWEEN THE CONTRACT DOCUMENTS, OWNER-PROVIDED INFORMATION, SITE CONDITIONS, MANUFACTURER RECOMMENDATIONS, OR CODES, REGULATIONS OR RULES OF JURSIDCTIONS HAVING AUTHORITY.
3. PRIOR TO THE COMMENCEMENT OF ANY WORK, THE CONTRACTOR SHALL BECOME FAMILIAR WITH THE CONTRACT DOCUMENTS, OWNER-PROVIDED INFORMATION AND SITE CONDITIONS, INCLUDING TAKING FIELD MEASUREMENTS AS NECESSARY.
4. ALL DIMENSIONS OR EXISTING WORK MUST BE VERIFIED PRIOR TO COMMENCEMENT OF WORK.
5. SITE INFORMATION CONTAINED HEREIN, INCLUDING, BUT NOT LIMITED TO, DIMENSIONS AND LOCATIONS OF EXISTING UTILITIES AND STRUCTURES, IS BASED UPON THE SURVEY AND IS PROVIDED FOR INFORMATIONAL PURPOSES ONLY. THE ARCHITECT TAKES NO RESPONSIBILITY FOR ITS ACCURACY.
6. THE CONTRACTOR SHALL VERIFY LOCATIONS OF EXISTING UTILITIES. CARE SHOULD BE TAKEN TO AVOID DAMAGE TO OR DISTURBANCE OF EXISTING UTILITIES.
7. THE CONTRACTOR IS RESPONSIBLE FOR ALL BRACING AND SHORING DURING CONSTRUCTION.
8. THE CONTRACTOR SHALL SECURE AND PAY FOR ALL GOVERNMENTAL PERMITS, FEES, LICENSES AND INSPECTIONS NECESSARY FOR PROPER EXECUTION AND COMPLETION OF WORK.
9. THE CONTRACT DOCUMENTS ARE COMPLEMENTARY AND WHAT IS REQUIRED BY ONE SHALL BE REQUIRED BY ALL.
10. ALL DIMENSIONS ARE TO FACE OF SHEATHING OR FACE OF CONCRETE OR CENTERLINE OF COLUMNS UNLESS NOTED OTHERWISE. CONTACT ARCHITECT FOR CLARIFICATIONS.
11. DIMENSIONS NOTED AS "CLEAR" OR "CLR" INDICATE CLEAR DISTANCES BETWEEN FINISHES.
12. PROVIDE NEAT CUT WHERE UTILITIES PENETRATE RATED WALL AND FLOOR ASSEMBLIES. SEAL WITH NON-COMBUSTIBLE MATERIAL IMPERVIOUS TO THE PASSAGE OF SMOKE.
13. ACCESS WAYS TO RESIDENCES AROUND THE PROJECT SITE MUST BE MAINTAINED AND KEPT CLEAR. ACCESS TO RESIDENTIAL PARKING MUST BE KEPT CLEAR.
14. DRAWINGS INDICATE LOCATION, DIMENSIONS, REFERENCE, AND TYPICAL DETAIL FOR CONSTRUCTION. MINOR DETAILS NOT USUALLY SHOWN OR SPECIFIED, BUT NECESSARY FOR PROPER CONSTRUCTION OF ANY PART OF THE WORK SHALL BE INCLUDED AS IF THEY WERE INDICATED IN THE DRAWINGS. FOR CONDITIONS NOT ILLUSTRATED, NOTIFY ARCHITECT FOR CLARIFICATION AND/OR SIMILAR DETAIL.
15. THESE DRAWINGS ARE DIVIDED INTO SECTIONS FOR CONVENIENCE ONLY. CONTRACTOR, SUBCONTRACTORS, VENDORS AND MATERIAL SUPPLIERS SHALL REFER TO ALL RELEVANT SECTIONS IN BIDDING AND PERFORMING THEIR WORK AND SHALL BE RESPONSIBLE FOR ALL ASPECTS OF THEIR WORK REGARDLESS OF WHERE THE INFORMATION OCCURS ON THE DRAWINGS.
16. CONTRACTOR SHALL PROVIDE STRUCTURAL BACKING/BLOCKING FOR ALL WALL MOUNTED FIXTURES, FINISHES AND EQUIPMENT, AND FOR ALL HANGING FIXTURES, BLINDS, ETC.
17. THE DRAWINGS SHALL NOT BE SCALED FOR DIMENSIONS.

ABBREVIATIONS

NOTE: ABBREVIATIONS NOTED IN THE DRAWINGS THAT ARE FOLLOWED BY A MODIFIER SUCH AS "-1", "-A" ARE FURTHER DEFINED IN THE SPECIFICATIONS SECTION ASSOCIATED WITH THE MATERIAL OR SYSTEM ASSEMBY AS NOTED. REFERENCE FINISH LEGEND A070

ABV	ABOVE
ACIP	ARCHITECTURAL CAST-IN-PLACE CONCRETE
ADJ	ADJUSTABLE
AFF	ABOVE FINISH FLOOR
AL	ALUMINUM
ALT	ALTERNATE
APPROX	APPROXIMATE
ARCH	ARCHITECTURAL (TECT)
AV	AUDIO VISUAL
AVG	AVERAGE
BLDG	BUILDING
BLW	BELOW
BO	BOTTOM OF
BR	BEDROOM
C	CHANNEL STEEL MEMBER
CIP	CAST-IN-PLACE
CJ	CONTROL JOINT
CL	CENTERLINE
CLG	CEILING
CLR	CLEAR
CMU	CONCRETE MASONRY UNIT
CONC	CONCRETE
CONF	CONFERENCE
CONT	CONTINUOUS
COORD	COORDINATE
CTR	CENTER
CW	CURTAIN WALL, COLD WATER
D	DEPTH
DBL	DOUBLE
DEMO	DEMOLITION
DEPT	DEPARTMENT
DET	DETAIL
DIA	DIAMETER
DIAG	DIAGONAL
DIM	DIMENSION
DN	DOWN
DS	DOWNSPOUT
DWG	DRAWING
DWR	DRAWER
(E)	EXISTING
E	EAST
EA	EACH
EJ	EXPANSION JOINT
EL	ELEVATION
ELEC	ELECTRIC(AL)
ELEV	ELEVATOR
EQ	EQUAL
EXT	EXTERIOR
FA	FIRE ALARM
FACP	FIRE ALARM CONTROL PANEL
FAPB	FIRE ALARM PULL BOX
FD	FLOOR DRAIN
FDC	FIRE DEPARTMENT CONNECTION
FEC	FIRE EXTINGUISHER CABINET
FEXT	FIRE EXTINGUISHER
FF	FINISHED FLOOR
FHC	FIRE HOSE CABINET
FIN	FINISH
FO	FACE OF
FOF	FACE OF FINISH
FOIC	FURNISHED BY OWNER INSTALLED BY CONTRACTOR
FOIO	FURNISHED BY OWNER INSTALLED BY OWNER
FRT	FIRE RETARDENT TREATED (INTERIOR)
FS	FIRE SPRINKLER
FT	FOOT, FEET
FURN	FURNITURE
GA	GAUGE
GAL	GALLON
GALV	GALVANIZED
GC	GENERAL CONTRACTOR
GFRC	GLASS FIBER REINFORCED CONCRETE
GWB	GYPSUM WALL BOARD
GYP	GYPSUM
HDW	HARDWARE
HEX	HEXAGONAL
HM	HOLLOW METAL
HO	HOLD OPEN
HORIZ	HORIZONTAL
HR	HOUR
HSS	HOLLOW STRUCTURAL SECTION
HT	HEIGHT
HVAC	HEATING/VENTILATION/AIR CONDITIONING
HW	HOT WATER
HWY	HIGHWAY
IBC	INTERNATIONAL BUILDING CODE
ID	INSIDE DIAMETER
IN	INCH(ES)
INCL	INCLUDE(D), INCLUDING, INCLUSIVE
INSUL	INSULATION
INT	INTERIOR
JAN	JANITOR
K	100 POUNDS (KIP)
KIT	KITCHEN
KSI	KIPS PER SQUARE INCH
KW	KILOWATTS
L	ANGLE STEEL MEMBER
LAB	LABORATORY
LAV	LAVATORY
LB	POUND(S)
LF	LINEAR FEET
LH	LEFT HAND
LIN	LINEAL
LLH	LONG LEG HORIZONTAL
LLV	LONG LEG VERTICAL
MAX	MAXIMUM
MBR	MASTER BEDROOM
MDF	MEDIUM DENSITY FIBERBOARD
MDO	MEDIUM DENSITY OVERLAY
MECH	MECHANICAL
MEZZ	MEZZANINE
MFR	MANUFACTURER
MIN	MINIMUM, MINUTE(S)
MISC	MISCELLANEOUS
MO	MASONRY OPENING
N	NORTH
NC	NOISE CRITERIA
NIC	NOT IN CONTRACT
NOM	NOMINAL
NTS	NOT TO SCALE
OC	ON CENTER
OD	OUTSIDE DIAMETER
OH	OPPOSITE HAND
OHCD	OVERHEAD COILING DOOR
OHCS	OVERHEAD COILING SHUTTER
OHWM	ORDINARY HIGH WATER MARK
OPP	OPPOSITE
ORD	OVERFLOW ROOF DRAIN
OTS	OPTEN TO STRUCTURE
PCF	POUNDS PER CUBIC FOOT
PD	PLANTER DRAIN
PERF	PERFORATE(D)
PL	PLATE
PREFAB	PREABRICATED
PREFIN	PREFINISHED
PSF	POUNDS PER SQUARE FOOT
PSI	POUNDS PER SQUARE INCH
PT	POINT, POST TENSIONED, PRESSURE TREATED
PVC	POLYVINYL CHLORIDE
PVDF	FLUOROPOLYMER COATING
QTY	QUANTITY
RCP	REFLECTED CEILING PLAN
REBAR	REINFORCING BAR
REF	REFERENCE
REQD	REQUIRED
REV	REVISED, REVISION
RH	RIGHT HAND, ROOF HATCH
RM	ROOM
RO	ROUGH OPENING
ROW	RIGHT-OF-WAY
RR	RESTROOM
S	SOUTH
SAM	SELF ADHERED MEMBRANE
SCHED	SCHEDULE
SECT	SECTION
SF	SQUARE FOOT
SIM	SIMILAR
SOG	SLAB-ON-GRADE
SOHD	SECTIONAL OVERHEAD DOOR
SPEC	SPECIFICATION
SS	STAINLESS STEEL
ST	STAIR, STREET
STC	SOUND TRANSMISSION CLASS
STOR	STORAGE
STRUCT	STRUCTURE (AL)
STS	SILICONE TRANSITION STRIP
T&G	TONGUE AND GROOVE
TEL	TELEPHONE
TEMP	TEMPORARY, TEMPERATURE
TO	TOP OF
TOC	TOP OF CONCRETE
TOP	TOP OF PARAPET
TOPO	TOPOGRAPHIC MAP
TOS	TOP OF STEEL
TOW	TOP OF WALL
TPO	THERMOPLASTIC POLYOLEFIN
TYP	TYPICAL
UL	UNDERWRITER'S LABORATORY
UNFIN	UNFINISHED
UNO	UNLESS NOTED OTHERWISE
UV	ULTRAVIOLET
V	VOLT
VERT	VERTICAL
VG	VERTICAL GRAIN
VIF	VERIFY IN FIELD
VOL	VOLUME
VTR	VENT THROUGH ROOF
W	WEST, WIDE
WC	WATER CLOSET
WRB	WEATHER RESISTIVE BARRIER

SYMBOLS LEGEND

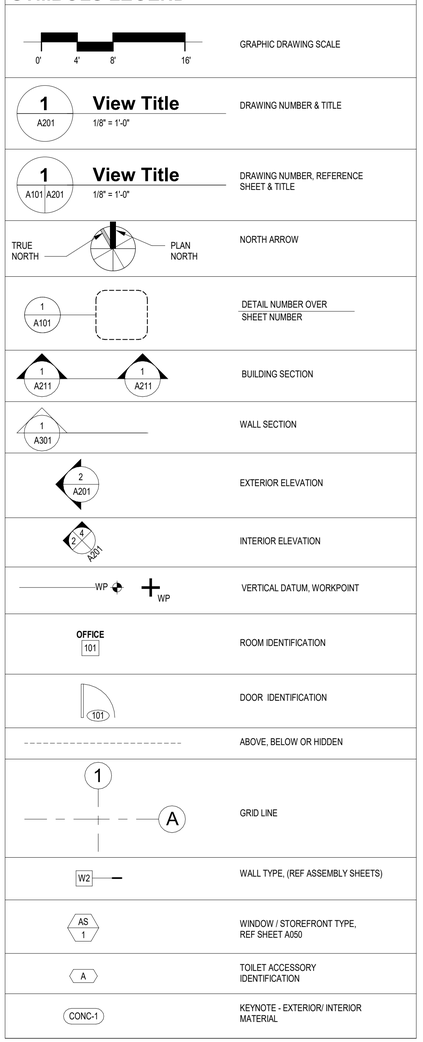

MATERIALS LEGEND

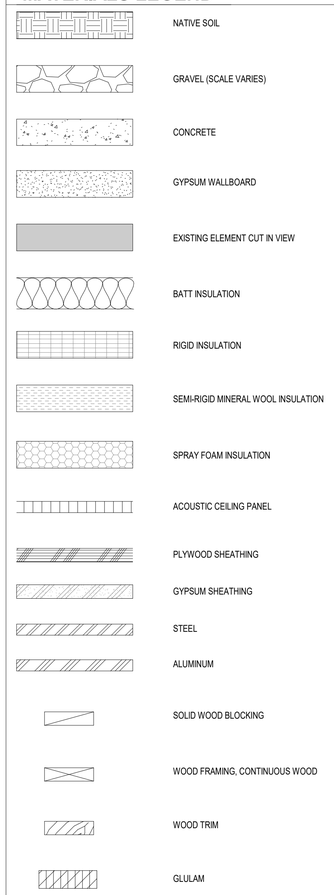

MILLER HULL

The Miller Hull Partnership, LLP
Architecture and Planning
Polson Building
71 Columbia, Sixth Floor
Seattle, WA 98104

Phone: 206.682.6837
Contact: Name

STAMP

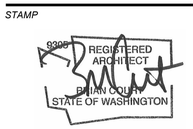

MERCER ISLAND HOUSE: CASCADE

6838 96TH AVE SE
MERCER ISLAND, WA 98040

SUBMITTAL

100% CONSTRUCTION DOCUMENTS

FEBRUARY 24, 2023

REVISIONS

No.	Description	Date

Drawn: AN
Checked: AN
M|H Proj No.: A20.0085.00

Issue Date: FEBRUARY 24, 2023

SHEET

LEGENDS, NOTES & ABBREVIATIONS

A001

ROOF ASSEMBLIES

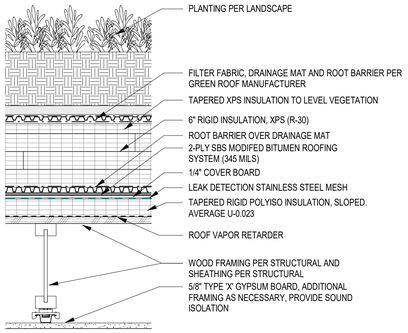

R1 VEGETATED ROOF

U VALUE: 0.023
WSEC TABLE A102.2.6(2)

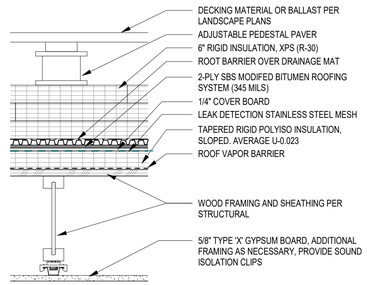

R2 PROTECTED MEMBRANE ROOF

U VALUE: 0.023
WSEC TABLE A102.2.6(2)

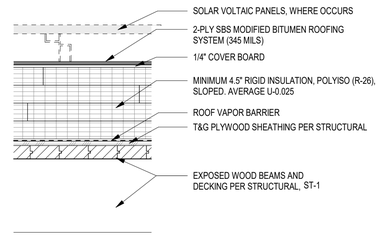

R3 MEMBRANE ROOF

U VALUE: 0.025
WSEC TABLE A102.2.6(1)

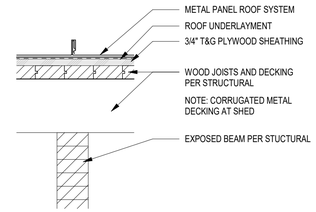

R4 METAL PANEL - UNINSULATED

U VALUE: N/A

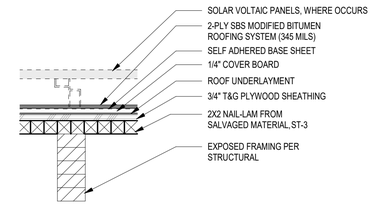

R5 MEMBRANE - UNINSULATED

U VALUE: N/A

EXTERIOR WALL ASSEMBLIES

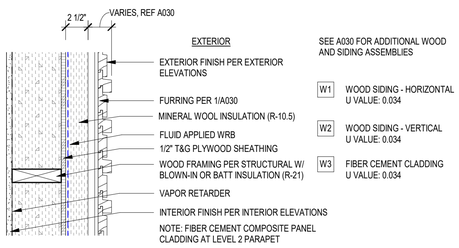

W1 2X6 RAINSCREEN

U VALUE: 0.034
WSEC TABLE A103.3.1(5)

1

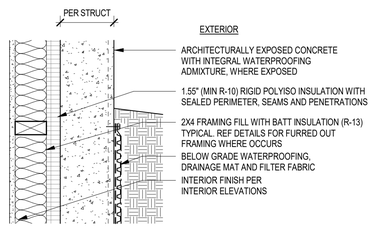

W4 BELOW GRADE CONC. WALL

U VALUE: 0.040
COMPLIES BASED ON R402.1.1 FOOTNOTE C 10/15/21 + 5TB

1

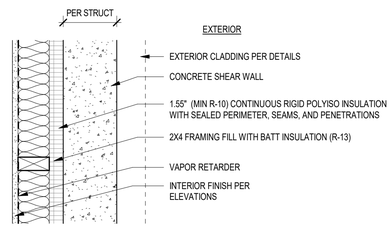

W5 CONC. WALL EXT. CLADDING

U VALUE: 0.045
WSEC TABLE A103.3.1(2)

1

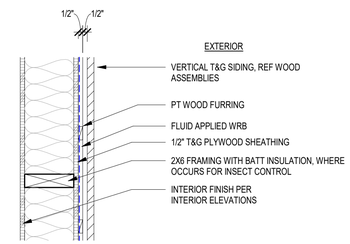

W6 WOOD SIDING - UNINSULATED

U VALUE: N/A

FLOOR ASSEMBLIES

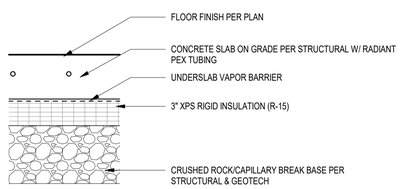

F1 CONCRETE SLAB-ON-GRADE

F-0.44
WSEC TABLE A106.1 FOR HEATED SLAB

1

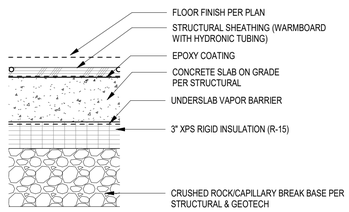

F2 CONCRETE SLAB-ON-GRADE

F-0.44
WSEC TABLE A106.1 FOR HEATED SLAB

1

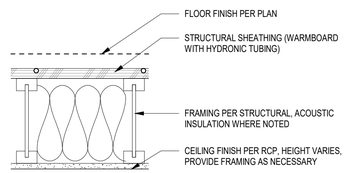

F3 WOOD FRAMED FLOOR

U VALUE: N/A

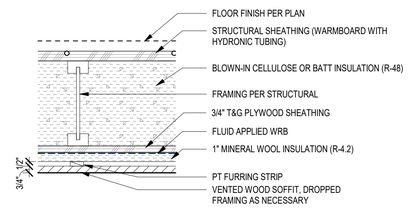

F4 WOOD FRAMED FLOOR / SOFFIT

U VALUE: 0.022
CUSTOM CALCULATION BASED ON WSEC A105

1

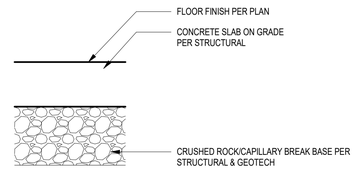

F5 CONCRETE SOG - UNINSULATED

U VALUE: N/A

INTERIOR PARTITIONS

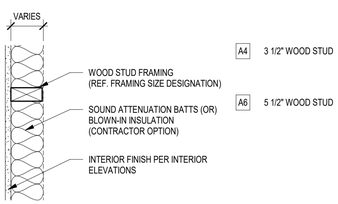

A WOOD STUD FURRING WALL

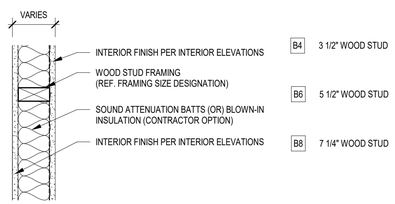

B WOOD STUD WALL

INTERIOR FINISH ASSEMBLIES

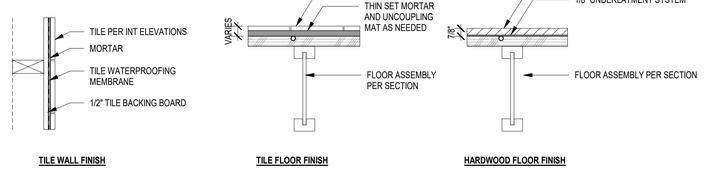

1

ASSEMBLY NOTES

1. WALL & PARTITION TYPE SYMBOLS ARE NOTED ON THE FLOOR PLANS.
2. ALL GYPSUM BOARD TO BE 5/8" TYPE 'X', UNO. WATER-RESISTANT GWB WITH CORROSION RESISTANT SCREWS TO BE USED IN PLACE OF STANDARD GWB AT WALLS AND CEILINGS IN ALL WET/HUMID AREAS INCLUDING, BUT NOT LIMITED TO: BATHROOMS, MECH/ELEC ROOMS, AND STORAGE ROOMS.
3. REFER TO STRUCTURAL FOR CONCRETE SLAB DESIGN, PLYWOOD SHEATHING, STRUCTURAL FRAMING AND FASTENING.
4. BLOCKING IS REQUIRED AT THE FOLLOWING LOCATIONS: WALL MOUNTED CABINETS, ACCESSORIES, EQUIPMENT, A/V EQUIPMENT LOCATIONS, DOOR STROPS, HOLD-OPENS, TOILETS & ACCESSORIES AND OTHER LOCATIONS AS REQUIRED BY MANUFACTURER SPECIFICATIONS OR INDUSTRY STANDARDS REFERENCED.
5. FIRE BLOCKING SHALL BE PROVIDED TO CUT OFF ALL CONCEALED DRAFT OPENINGS (BOTH VERTICAL AND HORIZONTAL) AND TO FORM AN EFFECTIVE FIRE BARRIER BETWEN STORIES, AND BETWEEN A TOP STORY AND THE ROOF SPACE PER R302.11.
6. INSTALL INSULATION SO THAT MANUFACTURER'S R-VALUE MARK IS READILY OBSERVABLE UPON INSPECTION.
7. FOR BATT INSULATION, FILL CAVITIES COMPLETELY UNLESS NOTED OTHERWISE. FRICTION FIT INSULATION INTO STUD CAVITIES. DO NOT COMPRESS INSULATION.
8. FOR RIGID AND SEMI-RIGID INSULATION, INSTALL INSULATION WITH ADHESIVE OR STICK PINS ONLY UNLESS NOTED OTHERWISE. DO NOT BRIDGE INSULATION WITH CONDUCTIVE ELEMENTS SUCH AS METAL FURRING OR FRAMING.
9. AIR BARRIER COMPONENTS IN EXTERIOR ASSEMBLIES SHALL BE CONTINUOUS AND SHALL BE SEALED TO ADJACENT COMPONENTS AT TRANSITIONS. REFER TO THE DETAILS FOR REQUIREMENTS AT AIR BARRIER TRANSITIONS.
10. REFERENCE FLOOR PLANS, REFLECTED CIA1713 PLANS, AND INTERIOR ELEVATIONS FOR FINISH INFORMATION.
11. SHED ASSEMBLIES ARE NOTED ON SHEET .

MILLER HULL
The Miller Hull Partnership, LLP
Architecture and Planning
Polson Building
71 Columbia, Sixth Floor
Seattle, WA 98104
Phone: 206.682.6837
Contact: Name

STAMP

9309 REGISTERED ARCHITECT BRIAN COLBY STATE OF WASHINGTON

MERCER ISLAND REVIEWED FOR CODE COMPLIANCE March 27, 2023 SITE COPY

MERCER ISLAND HOUSE: CASCADE

6838 96TH AVE SE
MERCER ISLAND, WA 98040

SUBMITTAL

100% CONSTRUCTION DOCUMENTS

FEBRUARY 24, 2023

REVISIONS

No.	Description	Date
1	Building Permit Resubmittal	10/27/22

Drawn: AN
Checked: AN
M|H Proj No.: A20.0085.00
Issue Date: FEBRUARY 24, 2023

SHEET

ASSEMBLIES
A010

DOOR SCHEDULE

NO.	DOOR TYPE	DOOR WIDTH	DOOR HEIGHT	DOOR MATERIAL	DOOR THICKNESS	FRAME MATERIAL	PASSAGE/PRIVACY	HARDWARE NOTES	COMMENTS
001	G1	3' - 0"	3' - 6 3/4"	WD	1 3/4"	AL: HPC	PASSAGE	GATE LATCH	
002	G2	3' - 0"	3' - 1"	MP-1	1 3/4"	AL: HPC	PASSAGE	GATE LATCH	
003	G3	2' - 5"	3' - 7"	WWM-2	1 3/4"	WD	PASSAGE	GATE LATCH	
100.0	FG	3' - 3 1/2"	9' - 1"	AL	1 3/4"	AL	ENTRY		MODULE PER FRAME ELEVATIONS
100.2	FG	3' - 3 1/2"	8' - 11 1/2"	AL	1 3/4"	AL	ENTRY		MODULE PER FRAME ELEVATIONS
100.3	B	3' - 0"	9' - 0"	WD	1 3/8"	WD	PASSAGE	POCKET DOOR	INCORPORATED INTO CASEWORK
100.4	B	3' - 0"	9' - 0"	WD	1 3/8"	WD	PASSAGE	POCKET DOOR	INCORPORATED INTO CASEWORK
102.0	A	3' - 0"	7' - 0"	WD:PNT	1 3/4"	WD:PNT	PASSAGE		
103.0	A	3' - 0"	7' - 0"	WD:PNT	1 3/4"	WD:PNT	PASSAGE		
104.0	A	2' - 4"	7' - 0"	WD:PNT	1 3/4"	WD:PNT	PRIVACY		
104.1	C2	2' - 4"	6' - 10 1/4"	GL	1/2"	GL	PASSAGE	SHOWER DOOR HARDWARE	
105.0	FG	3' - 3 1/2"	9' - 1"	AL	1 3/4"	AL	ENTRY		
106.0	A	2' - 6"	7' - 0"	WD	1 3/4"	WD	PRIVACY		
110.0	A	3' - 0"	7' - 0"	WD:PNT	1 3/4"	WD:PNT	PASSAGE		COORDINATE WITH ELEVATOR REQUIREMENTS
200.0	A	3' - 0"	8' - 3 1/2"	WD	1 3/4"	WD	PRIVACY		
201.0	A	2' - 8"	7' - 0"	WD:PNT	1 3/4"	WD:PNT	PRIVACY		
201.1	C1	2' - 8"	8' - 4 1/8"	GL	1/2"	GL	PASSAGE	SHOWER DOOR HARDWARE	
201.2	C1	2' - 8"	8' - 5 3/4"	GL	1/2"	GL	PASSAGE	SHOWER DOOR HARDWARE	
202.0	FG	3' - 1"	8' - 3 1/2"	AL	1 3/4"	AL	PASSAGE		MODULE PER FRAME ELEVATIONS
203.0	A	3' - 0"	6' - 10 1/2"	WD	1 3/4"	WD	PRIVACY		INCORPORATED INTO CASEWORK
203.1	A	2' - 6"	7' - 0"	WD:PNT	1 3/4"	WD:PNT	PRIVACY		
203.2	A	2' - 4"	7' - 0"	WD:PNT	1 3/4"	WD:PNT	PASSAGE		
203.3	C3	2' - 7 5/8"	5' - 3 3/4"	GL	1/2"	GL	PASSAGE		
204.0	A	3' - 0"	7' - 0"	WD:PNT	1 3/4"	WD:PNT	PRIVACY		
204.1	A	2' - 6"	7' - 0"	WD:PNT	1 3/4"	WD:PNT	PRIVACY		
204.2	A	2' - 6"	7' - 0"	WD:PNT	1 3/4"	WD:PNT	PASSAGE		
204.3	C2	1' - 11 1/2"	6' - 9 3/4"	GL	1/2"	GL	PASSAGE	SHOWER DOOR HARDWARE	
205.0	A	3' - 0"	7' - 0"	WD:PNT	1 3/4"	WD:PNT	PASSAGE		
205.1	B	3' - 0"	7' - 0"	WD: PNT	1 3/8"	WD: PNT	PASSAGE		
206.0	FG	3' - 0 1/4"	8' - 4 1/8"	AL	1 3/4"	AL	ENTRY		MODULE PER FRAME ELEVATIONS
210.0	A	3' - 0"	7' - 0"	WD:PNT	1 3/4"	WD:PNT	PASSAGE		COORDINATE WITH ELEVATOR REQUIREMENTS
300.0	ENT	3' - 0"	7' - 6 5/8"	WD	1 3/4"	AL	ENTRY		MODULE PER FRAME ELEVATIONS
302.0	A	2' - 6"	7' - 6"	WD: PNT	1 3/4"	WD: PNT	PRIVACY		
310.0	A	3' - 0"	7' - 0"	WD: PNT	1 3/4"	WD: PNT	PASSAGE		COORDINATE WITH ELEVATOR REQUIREMENTS
400	BD	6' - 0"	7' - 0"	WD / STL	2"	WD / STL	ENTRY	PADLOCK	PER DETAILS
500.0	BFLD	8' - 0"	9' - 6"	GL / AL	6"	AL	ENTRY	REMOTE CONTOL OPENER	PER DETAILS
500.1	BD	6' - 0"	7' - 2"	WD / STL	2 3/4"	WD / STL	ENTRY	PADLOCK	PER DETAILS

GENERAL DOOR NOTES

1. ALL VISION GLASS IN DOORS TO BE CLEAR INSULATED LOW-E TEMPERED SAFETY GLASS IN ACCORDANCE WITH R308.4
2. SEE FLOOR PLANS FOR DIRECTION OF DOOR SWING.
3. REFERENCE FRAME ELEVATION SHEETS A050 FOR DOOR PERFORMENCE REQUIREMENTS OF EXTERIOR GLAZED DOORS. REFERENCE FRAME ELEVATION SHEETS FOR LIFT AND SLIDE DOORS.
4. GC TO COORDINATE SECURITY SYSTEM REQUIREMENTS INTEGRAL WITH DOOR HARDWARE.
5. FIELD VERIFY ALL ROUGH OPENINGS PRIOR TO FABRICATING FRAMES.
6. FIELD VERIFY ALL EXISTING CONDITIONS.
7. COORDINATE HARDWARE SELECTION AND FINISH WITH ARCHITECT AND OWNER IN THE FIELD.
8. CONTRACTOR SHALL PROVIDE SHOP DRAWINGS FOR ALL DOORS TO BE REVIEWED BY ARCHITECT PRIOR TO FABRICATION.

DOOR & FRAME ABBREVIATIONS

AL	ALUMINUM
GL	GLASS
HPC	HIGH PERFORMANCE COATING
MP	PERFORATED METAL PANEL
PNT	PAINTED FINISH
WD	WOOD
STL	STEEL
WWM	WELDED WIRE MESH
1	
(S)	SAFETY GLAZING

DOOR TYPES

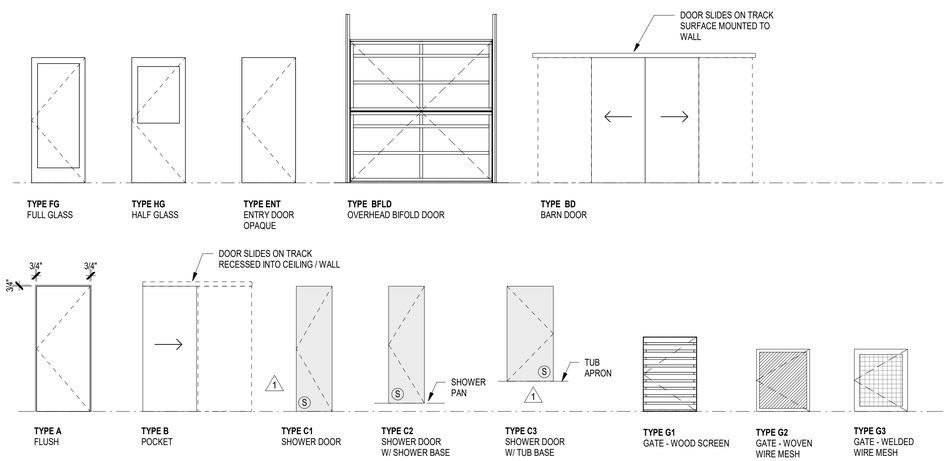

LOUVER FRAME ELEVATIONS

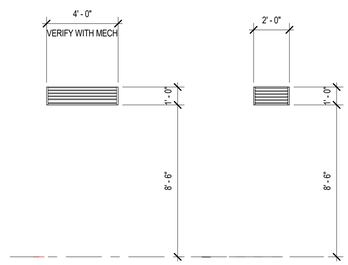

LV-01
1/4" = 1'-0"

LV-02
1/4" = 1'-0"

ASSEMBLY TYPE	DIAGRAM	SPECIFICATION
WD-1: HORIZONTAL RIBBED SIDING KEBONY CUSTOM PROFILES WITH KEBONY PRS CONCEALED CLIP SYSTEM SEE ASSEMBLY SHEET, EXTERIOR ELEVATIONS & DETAIL SHEETS FOR MORE INFORMATION	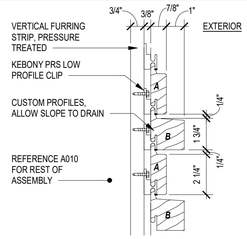	07 46 23
WD-2: VERTICAL SHIP LAP KEBONY 1X6 CHARACTER SHIP LAP WITH EXPOSED FASTENERS SEE ASSEMBLY SHEET, EXTERIOR ELEVATIONS & DETAIL SHEETS FOR MORE INFORMATION	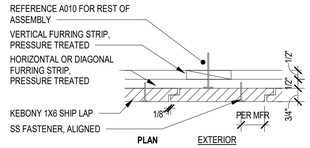	07 46 23
WD-3: HORIZONTAL OPEN JOINT WOOD SCREEN OVER STEEL KEBONY CUSTOM PROFILE FASTENED TO VERTICAL KEBONY FURRING STRIP BOLTED TO STEEL	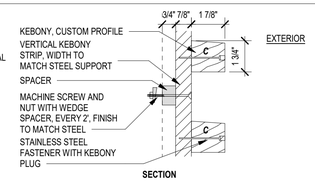	07 46 23
WD-4: HORIZONTAL OPEN JOINT WOOD SCREEN OVER WOOD KEBONY CUSTOM PROFILE	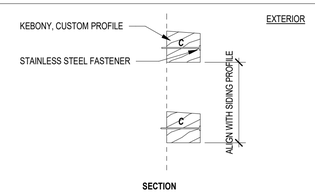	07 46 23
WD-5: OPEN JOINT WOOD SOFFIT ALASKAN YELLOW CEDAR W/ EXPOSED FASTENERS	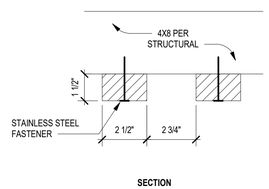	07 46 23
FCP-1: FIBER CEMENT PANEL CLADDING FIBER CEMENT PANEL RAINSCREEN W/ EXPOSED FASTENERS	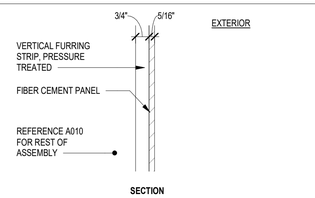	07 46 46

FINISH LEGEND

WOOD / SIDING LEGEND

MASTER FINISH LEGEND

AL-1	05 50 00 - POWDERCOATED ALUMINUM
BB-1	09 72 00 - BULLETIN BOARD
CJ-1	03 30 00 - CONTROL JOINT AT CIP ARCHITECTURAL CONCRETE, CHAMFER STRIP
CONC-1	03 30 00 - CIP ARCHITECTURAL CONCRETE, FORM TIE LOCATIONS TO BE COORDINATED IN SHOP DRAWINGS
CONC-2	03 35 43 - HONED CONCRETE SLAB ON GRADE
CONC-3	03 30 00 - BROOM FINISH
CTOP-1	12 36 00 - ENGINEERED QUARTZ COUNTERTOP, WHITE
CTOP-2	12 36 00 - RECYCLED GLASS AND CEMENT COUNTERTOP, WHITE
CTOP-3	12 36 00 - ENGINEERED QUARTZ COUNTERTOP, GRAY
CTOP-4	12 36 00 - COUNTERTOP, TBD
CTOP-5	12 36 00 - SALVAGED WOOD COUNTERTOP
CTOP-6	12 36 00 - BUTCHER BLOCK COUNTERTOP
FAB-1	12 22 16 - DRAPERY
FAB-2	12 22 16 - DRAPERY, ACOUSTIC
FCP-1	07 46 46 - FIBER CEMENT SIDING
GL-1	08 80 00 - TRIPLE PANE IGU, LOW E COATING
GL-3	08 80 00 - 1/2" INTERIOR GLAZING - FROSTED
GL-4	08 80 00 - 1/8" FROSTED GLASS
HP-1	09 97 13 - HIGH PERFORMANCE COATING
MIRR-1	06 40 00 - CLEAR MIRROR
MP-1	05 51 41 - PERFORATED METAL PANEL
PLAST-1	09 26 00 - VENEER PLASTER
PNT-1	09 90 00 - PAINTED GYPSUM BOARD, WHITE
PNT-2	09 90 00 - DOOR PAINT COLOR - TBD
PNT-3	09 90 00 - PAINTED GYPSUM BOARD, CEILING COLOR - TBD
PNT-4	09 90 00 - PAINTED GYPSUM BOARD, WALL COLOR - TBD
PVR-1	32 14 00 - ROOF PAVERS
RS-1	12 24 00 - ROLLER SHADE, MANUAL, LIGHT FILTERING
RS-2	12 24 00 - ROLLER SHADE, MANUAL, BLACKOUT AND LIGHT FILTERING
RS-3	12 24 00 - ROLLER SHADE, AUTOMATED, LIGHT FILTERING
SM-1	07 62 00 - SHEET METAL TRIM, REFERENCE DETAILS. FINISH TO MATCH ADJACENT MATERIAL
SST-1	05 50 00 - STAINLESS STEEL, BEADBLASTED
ST-1	09 93 13 - INTERIOR WOOD FINISH

MASTER FINISH LEGEND

ST-2	09 93 13 - EXTERIOR WOOD FINISH
ST-3	09 93 13 - EXTERIOR WOOD FINISH - WALKING SURFACE
ST-4	09 93 13 - INTERIOR WOOD FINISH - WALKING SURFACE
STL-1	05 00 00 - GALVANIZED STEEL
STL-2	05 05 14 - BLACKENED STEEL
TL-2	09 30 00 - FLOOR TILE, GEOMETRIC MOSAIC
TL-3	09 30 00 - FLOOR TILE, 2X2 MOSAIC
TL-5	09 30 00 - WALL TILE, 2x6 VERTICAL STACKED, BLUE
TL-6	09 30 00 - WALL TILE, 2X6 VERTICAL STACKED, GRAY
TL-7	09 30 00 - WALL TILE, 1X6 MOSAIC RUNNING BOND, WHITE
TL-8	09 30 00 - ACCENT TILE, 6"X6"
TP	10 28 00 - TOILET PAPER HOLDER
TR	10 28 00 - TOWEL ROD
VEG-1	07 55 63 - VEGETATED ROOF
WBASE	06 40 00 - FLUSH WOOD BASE. FINISH FACE TO ALIGN WIH FACE OF GWB ABOVE. PAINT TO MATCH GWB ABOVE, SEE INTERIOR DETAILS FOR ADDITIONAL INFORMATION
WD-1	07 46 23 - HORIZONTAL RIBBED KEBONY SIDING, REF DETAILS AND A030
WD-2	07 46 23 - VERTICAL T&G KEBONY SIDING, REF DETAILS AND A030
WD-3	07 36 23 - HORIZONTAL WOOD KEBONY SLATS OVER STEEL SUPPORTS. STEEL SUPPORTS TO BE PAINTED WITH HIGH PERFORMANCE PAINT, REF DETAILS AND A030
WD-4	07 36 23 - HORIZONTAL WOOD KEBONY SLATS OVER WOOD SUPPORTS, REF DETAILS AND A030
WD-5	07 46 23 - OPEN SLAT WOOD SOFFIT
WD-6	07 46 23 - EXTERIOR WOOD SOFFIT
WD-7	06 40 00 - KEBONY HANDRAIL WITH HP-1 STEEL SUPPORTS
WD-8	06 40 00 - DOUGLAS FIR VENEER CASEWORK
WD-9	06 40 00 - INTERIOR STAIR WOOD HANDRAIL
WD-10	07 46 23 - INTERIOR WOOD SOFFIT
WD-11	06 40 00 - DOUGLAS FIR INTERIOR PANELING
WD-12	06 15 00 - INTERIOR STAIR TREAD
WD-13	06 15 00 - EXTERIOR GLULAM DECKING
WDFL-1	09 64 33 - PRE-ENGINEERED WOOD FLOOR
WP-1	09 72 00 - WALLPAPER
WTRIM	06 40 00 - DOUGLAS FIR WOOD TRIM
WWM-2	05 50 00 - WELDED WIRE MESH, GALVANIZED

MILLER HULL
The Miller Hull Partnership, LLP
Architecture and Planning
Polson Building
71 Columbia, Sixth Floor
Seattle, WA 98104
Phone: 206.682.6837
Contact: Name

STAMP

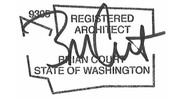

MERCER ISLAND HOUSE: CASCADE

6838 96TH AVE SE
MERCER ISLAND, WA 98040

SUBMITTAL

100% CONSTRUCTION DOCUMENTS

FEBRUARY 24, 2023

REVISIONS

No.	Description	Date
1	Building Permit Resubmittal	10/27/22

Drawn: AN
Checked: AN
M|H Proj No.: A20.0085.00
Issue Date: FEBRUARY 24, 2023

SHEET

DOORS, LOUVERS & FINISH LEGEND

A030

GENERAL FRAME ELEVATION NOTES

1. OVERALL DIMENSIONS SHOWN ARE ROUGH OPENINGS. FIELD VERIFY ALL OPENINGS PRIOR TO FABRICATING FRAMES AND GLAZING UNITS.
2. FIELD VERIFY EXISTING OPENINGS WHERE EXISTING WINDOWS ARE TO BE REPLACED.
3. SEE SPECIFICATIONS FOR DEPTH OF FRAMES.
4. REFERENCE DOOR SCHEDULE ON SHEET A030 FOR DOORS WHERE INDICATED.
5. ALL VIEWS FROM EXTERIOR UNLESS NOTED OTHERWISE.
6. PROVIDE SAFETY GLAZING AT ALL HAZARDOUS LOCATIONS AS DEFINED IN R308.4

(S) SAFETY GLAZING

GLAZING PERFORMANCE REQUIRMENTS

1. WHERE NFRC IS IDENTIFIED, PERFORMANCE VALUES ARE BASED ON NFRC CERTIFICATION. LABELS OR LABEL CERTIFICATES SHALL BE PROVIDED.
2. UNLESS OTHERWISE NOTED, EXTERIOR GLAZING UNITS SHALL BE INSULATED TRIPLE PANE GLAZING.
3. **CW**
   ALUMINUM CLAD CURTAIN WALL VENEER (TRIPLE GLAZED)
   U-VALUE: 0.16 MAXIMUM, NFRC CERTIFIED
   SHGC: 0.33 MAXIMUM, NFRC CERTIFIED
   BLACKCOMB METAL-CLAD, 56MM (BASIS OF DESIGN)
4. **AW**
   ALUMINUM CLAD WINDOWS (TRIPLE GLAZED)
   U-VALUE: 0.16 MAXIMUM, NFRC CERTIFIED
   SHGC: 0.33 MAXIMUM, NFRC CERTIFIED
   LOEWEN METAL-CLAD PICTURE/DIRECT SET(BASIS OF DESIGN)
5. **OW**
   GLAZED IN OPERABLE WINDOW - TILT/TURN(TRIPLE GLAZED)
   U-VALUE: 0.17 MAXIMUM, NFRC CERTIFIED
   SHGC: 0.33 MAXIMUM, NFRC CERTIFIED
   BLACKCOMB METAL-CLAD TILT/TURN (BASIS OF DESIGN)
6. **OW-A**
   GLAZED IN OPERABLE WINDOW - AWNING (TRIPLE GLAZED)
   U-VALUE: 0.18 MAXIMUM, NFRC CERTIFIED
   SHGC: 0.25 MAXIMUM, NFRC CERTIFIED
   LOEWEN METAL-CLAD AWNING, ROTO CRANK, FIXED SCREEN (BASIS OF DESIGN)
7. **OW-C**
   GLAZED IN OPERABLE WINDOW - CASEMENT (TRIPLE GLAZED)
   U-VALUE: 0.18 MAXIMUM, NFRC CERTIFIED
   SHGC: 0.25 MAXIMUM, NFRC CERTIFIED
   LOEWEN METAL-CLAD CASEMENT, PUSH OUT, RETRACTABLE SCREEN (BASIS OF DESIGN)
8. **LS**
   LIFT AND SLIDE DOOR (TRIPLE GLAZED)
   U-VALUE: 0.26 MAXIMUM, NFRC CERTIFIED
   SHGC: 0.26 MAXIMUM, NFRC CERTIFIED
   LOEWEN METAL-CLAD LIFT AND SLIDE (BASIS OF DESIGN)
9. **DO**
   GLAZED SWING DOOR (TRIPLE GLAZED)
   U-VALUE: 0.22 MAXIMUM, NFRC CERTIFIED
   SHGC: 0.26 MAXIMUM, NFRC CERTIFIED
   LOEWEN METAL-CLAD TERRACE DOOR, IN-SWING, NARROW STILE (BASIS OF DESIGN) AT AW
10. **FG (AT UNCONDITIONED GARAGE)**
    FIBERGLASS WINDOW (DOUBLE GLAZED)
    U-VALUE: N/A
    SHGC: N/A

MILLER HULL
The Miller Hull Partnership, LLP
Architecture and Planning
Polson Building
71 Columbia, Sixth Floor
Seattle, WA 98104
Phone: 206.682.6837
Contact: Name

STAMP

REGISTERED ARCHITECT
BRIAN COLEY
STATE OF WASHINGTON

REVIEWED FOR CODE COMPLIANCE
March 27, 2023
SITE COPY

MERCER ISLAND HOUSE: CASCADE

6838 96TH AVE SE
MERCER ISLAND, WA 98040

SUBMITTAL

100% CONSTRUCTION DOCUMENTS

FEBRUARY 24, 2023

REVISIONS

No.	Description	Date

Drawn: AN
Checked: AN
M|H Proj No.: A20.0085.00
Issue Date: FEBRUARY 24, 2023

SHEET

FRAME ELEVATIONS

A050

1 A111 **LEVEL 1 FLOOR PLAN**
1/4" = 1'-0"

GENERAL FLOOR PLAN NOTES

1. REFERENCE SHEET G101 FOR SITE PLAN.
2. REFERENCE DOOR SCHEDULE ON SHEET A030.
3. REFERENCE WINDOW TYPES ON SHEET A050 FOR SIZES AND U-VALUES.
4. REFERENCE STRUCTURAL DRAWINGS FOR SHEAR WALL LOCATIONS, BRACING AND FRAMING.
5. EXHAUST FANS AND SMOKE DETECTORS SHOWN ON RCP'S.
6. PROVIDE BLOCKING AS NECESSARY FOR ALL WALL HUNG ELEMENTS, REFER TO INTERIOR AND EXTERIOR ELEVATIONS.
7. REFERENCE ENLARGED PLANS AND INTERIOR ELEVATIONS FOR INTERIOR DETAIL CALLOUTS.
8. TILE PATTERNS ARE DIAGRAMMATIC. GC TO COORDINATE TILE PATTERN W/ ARCHITECT IN THE FIELD.

FINISH LEGEND

REPRESENTS FINISHES ON THIS SHEET ONLY, SEE A030 FOR MASTER FINISH LEGEND

CONC-2	03 35 43 - HONED CONCRETE SLAB ON GRADE
TL-3	09 30 00 - FLOOR TILE, 2X2 MOSAIC

MILLER HULL
The Miller Hull Partnership, LLP
Architecture and Planning
Polson Building
71 Columbia, Sixth Floor
Seattle, WA 98104
Phone: 206.682.6837
Contact: Name

STAMP

9305 REGISTERED ARCHITECT BRIAN COURT STATE OF WASHINGTON

REVIEWED FOR CODE COMPLIANCE March 27, 2023 SITE COPY

MERCER ISLAND HOUSE: CASCADE

6838 96TH AVE SE
MERCER ISLAND, WA 98040

SUBMITTAL

100% CONSTRUCTION DOCUMENTS

FEBRUARY 24, 2023

REVISIONS

No.	Description	Date
1	Building Permit Resubmittal	10/27/22

Drawn: AN
Checked: AN
M|H Proj No.: A20.0085.00
Issue Date: FEBRUARY 24, 2023

SHEET

LEVEL 1 - FLOOR PLAN

1 **A111**

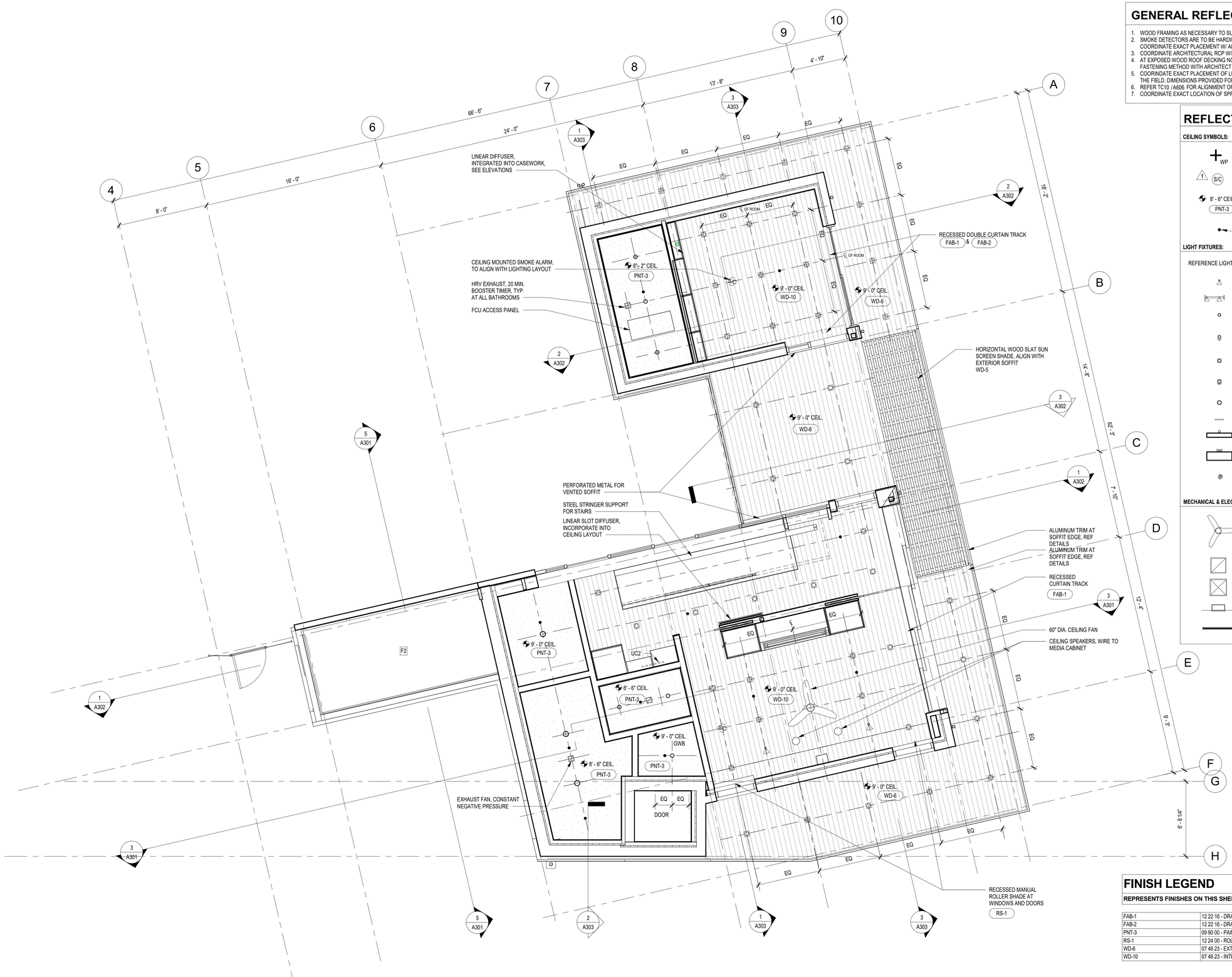

1 A113 **LEVEL 1 REFLECTED CEILING PLAN**

1/4" = 1'-0"

GENERAL REFLECTED CEILING PLAN NOTES

1. WOOD FRAMING AS NECESSARY TO SUPPORT DROPPED CEILINGS. REFERENCE STRUCTURAL.
2. SMOKE DETECTORS ARE TO BE HARDWIRED AND INTER-CONNECTED WITH A BATTERY BACKUP. COORDINATE EXACT PLACEMENT W/ ARCH IN THE FIELD.
3. COORDINATE ARCHITECTURAL RCP WITH MECHANICAL, ELECTRICAL, PLUMBING AND LIGHTING.
4. AT EXPOSED WOOD ROOF DECKING NO FASTENERS ARE TO BE VISIBLE THROUGH DECKING. CONFIRM FASTENING METHOD WITH ARCHITECT IN THE FIELD PRIOR TO INSTALLATION.
5. COORINDATE EXACT PLACEMENT OF LIGHT FIXTURES W/ ARCH, LIGHTING DESIGNER AND OWNERS IN THE FIELD. DIMENSIONS PROVIDED FOR REFERENCE ONLY. ALL DIMENSIONS TO BE VERIFIED IN FIELD.
6. REFER TC10 / A606 FOR ALIGNMENT OF FIXTURES ON WOOD-PANELED CEILING.
7. COORDINATE EXACT LOCATION OF SPRINKLERS W/ ARCH AND FIRE MARSHAL REQUIREMENTS.

REFLECTED CEILING PLAN LEGEND

CEILING SYMBOLS:

WP	WORK POINT FOR CEILING TILE/PANEL GRID @ WALL INTERSECTIONS, OR AS NOTED
1 S/C	CEILING MOUNTED COMBINATION SMOKE DETECTOR AND CARBON MONOXIDE ALARM
8' - 6" CEIL	CEILING HEIGHT ABOVE ASSOCIATED LEVEL'S DATUM, UNO
PNT-3	CEILING FINISH
	SPRINKLER, RECESSED AT L1 AND L2, PENDANT AT L3

LIGHT FIXTURES:

REFERENCE LIGHTING DRAWINGS AND SCHEDULE.

	MONOPOINT
	TRACKLIGHT W/ MONOPOINT
	RECESSED ADJUSTABLE DOWNLIGHT - ROUND TRIM FOR GYP CEILING
	RECESSED ADJUSTABLE DOWNLIGHT - ROUND TRIM FOR GYP CEILING - DIRECTED
	RECESSED ADJUSTABLE DOWNLIGHT - SQUARE TRIM FOR WOOD CEILING, REF
	RECESSED ADJUSTABLE DOWNLIGHT - SQUARE TRIM FOR WOOD CEILING - DIRECTED
	FLUSH MOUNT CEILING LIGHT
	UNDERCABINET LIGHT
	EXTERIOR WALL MOUNTED FIXTURE
	SECURITY LIGHT
	PENDANT LIGHT

MECHANICAL & ELECTRICAL FIXTURES:

	CEILING FAN, SEE PLAN FOR SIZE
	MECH RETURN GRILLES (REF: MECH)
	MECH SUPPLY GRILLES (REF: MECH)
	SIDEWALL SUPPLY GRILLE (REF: MECH)
	LINEAR SLOT DIFFUSER

FINISH LEGEND

REPRESENTS FINISHES ON THIS SHEET ONLY, SEE A030 FOR MASTER FINISH LEGEND

FAB-1	12 22 16 - DRAPERY
FAB-2	12 22 16 - DRAPERY, ACOUSTIC
PNT-3	09 90 00 - PAINTED GYPSUM BOARD, CEILING COLOR - TBD
RS-1	12 24 00 - ROLLER SHADE, MANUAL, LIGHT FILTERING
WD-6	07 46 23 - EXTERIOR WOOD SOFFIT
WD-10	07 46 23 - INTERIOR WOOD SOFFIT

0' 2' 4' 8'

MILLER HULL

The Miller Hull Partnership, LLP
Architecture and Planning
Polson Building
71 Columbia, Sixth Floor
Seattle, WA 98104

Phone: 206.682.6837
Contact: Name

STAMP

9309 REGISTERED ARCHITECT BRIAN COLEY STATE OF WASHINGTON

MERCER ISLAND REVIEWED FOR CODE COMPLIANCE March 27, 2023 SITE COPY

MERCER ISLAND HOUSE: CASCADE

6838 96TH AVE SE
MERCER ISLAND, WA 98040

SUBMITTAL

100% CONSTRUCTION DOCUMENTS

FEBRUARY 24, 2023

REVISIONS

No.	Description	Date

Drawn: Author
Checked: Checker
M|H Proj No.: A20.0085.00

Issue Date: FEBRUARY 24, 2023

SHEET

LEVEL 1 - REFLECTED CEILING PLAN

A113

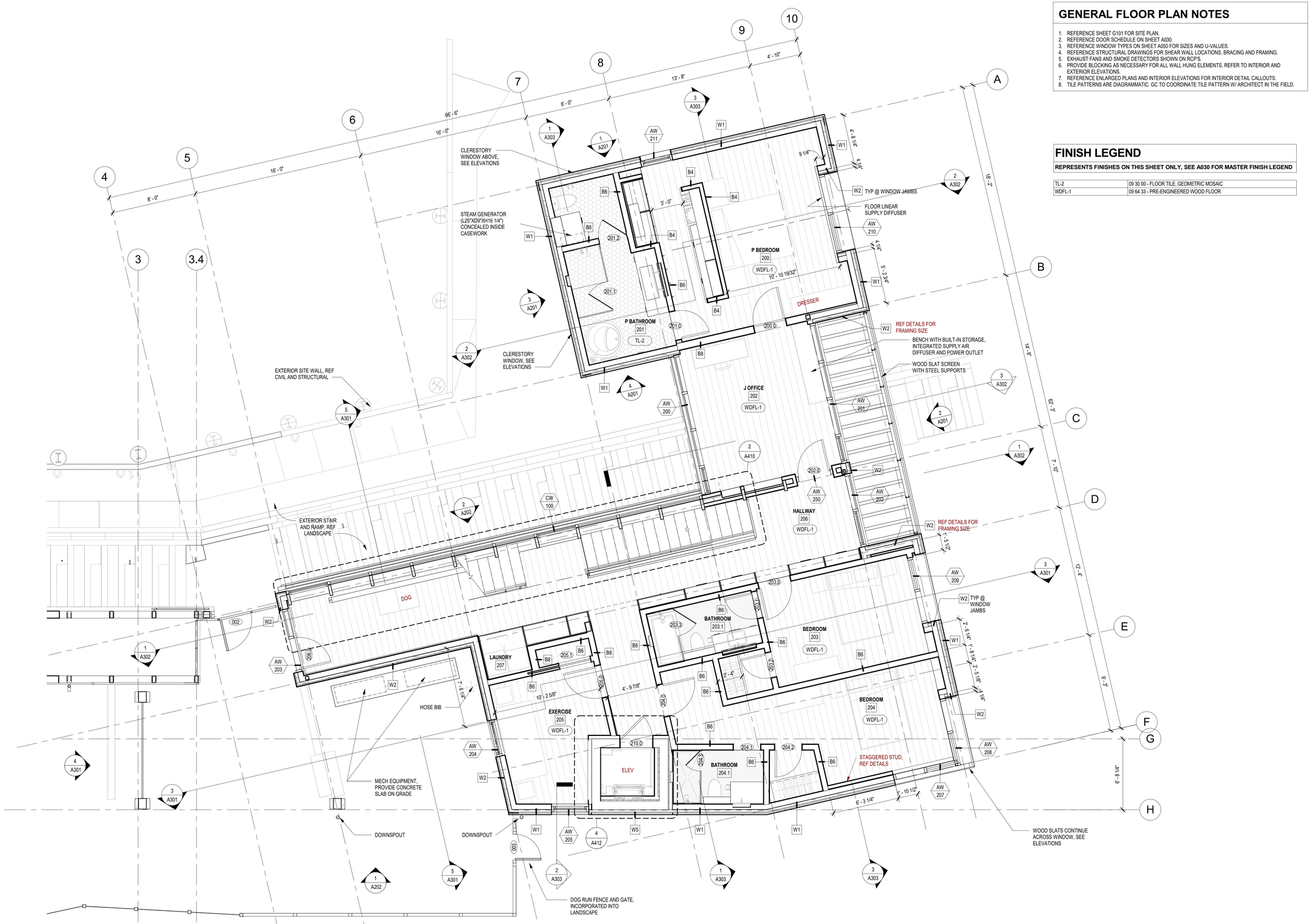

1 A121 LEVEL 2 FLOOR PLAN

1/4" = 1'-0"

GENERAL FLOOR PLAN NOTES

1. REFERENCE SHEET G101 FOR SITE PLAN.
2. REFERENCE DOOR SCHEDULE ON SHEET A030.
3. REFERENCE WINDOW TYPES ON SHEET A050 FOR SIZES AND U-VALUES.
4. REFERENCE STRUCTURAL DRAWINGS FOR SHEAR WALL LOCATIONS, BRACING AND FRAMING.
5. EXHAUST FANS AND SMOKE DETECTORS SHOWN ON RCP'S.
6. PROVIDE BLOCKING AS NECESSARY FOR ALL WALL HUNG ELEMENTS, REFER TO INTERIOR AND EXTERIOR ELEVATIONS.
7. REFERENCE ENLARGED PLANS AND INTERIOR ELEVATIONS FOR INTERIOR DETAIL CALLOUTS.
8. TILE PATTERNS ARE DIAGRAMMATIC. GC TO COORDINATE TILE PATTERN W/ ARCHITECT IN THE FIELD.

FINISH LEGEND

REPRESENTS FINISHES ON THIS SHEET ONLY, SEE A030 FOR MASTER FINISH LEGEND

TL-2	09 30 00 - FLOOR TILE, GEOMETRIC MOSAIC
WDFL-1	09 64 33 - PRE-ENGINEERED WOOD FLOOR

MILLER HULL

The Miller Hull Partnership, LLP
Architecture and Planning
Polson Building
71 Columbia, Sixth Floor
Seattle, WA 98104

Phone: 206.682.6837
Contact: Name

STAMP

9309 REGISTERED ARCHITECT BRIAN COLLIN STATE OF WASHINGTON

MERCER ISLAND REVIEWED FOR CODE COMPLIANCE March 27, 2023 SITE COPY

MERCER ISLAND HOUSE: CASCADE

6838 96TH AVE SE
MERCER ISLAND, WA 98040

SUBMITTAL

100% CONSTRUCTION DOCUMENTS

FEBRUARY 24, 2023

REVISIONS

No.	Description	Date

Drawn: AN
Checked: AN
M|H Proj No.: A20.0085.00

Issue Date: FEBRUARY 24, 2023

SHEET

LEVEL 2 - FLOOR PLAN

A121

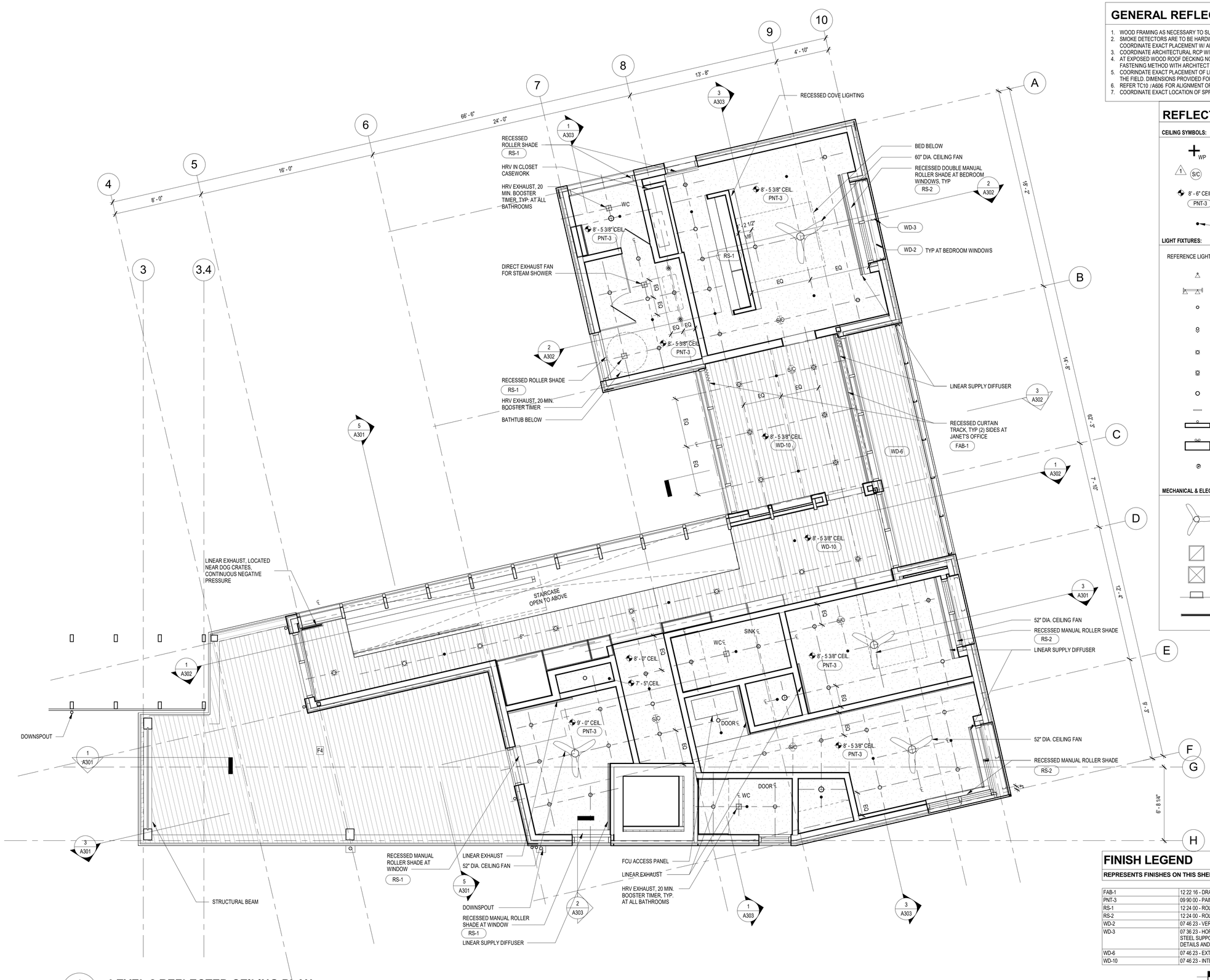

1 LEVEL 2 REFLECTED CEILING PLAN

A123

1/4" = 1'-0"

GENERAL REFLECTED CEILING PLAN NOTES

1. WOOD FRAMING AS NECESSARY TO SUPPORT DROPPED CEILINGS. REFERENCE STRUCTURAL.
2. SMOKE DETECTORS ARE TO BE HARDWIRED AND INTER-CONNECTED WITH A BATTERY BACKUP. COORDINATE EXACT PLACEMENT W/ ARCH IN THE FIELD.
3. COORDINATE ARCHITECTURAL RCP WITH MECHANICAL, ELECTRICAL, PLUMBING AND LIGHTING.
4. AT EXPOSED WOOD ROOF DECKING NO FASTENERS ARE TO BE VISIBLE THROUGH DECKING. CONFIRM FASTENING METHOD WITH ARCHITECT IN THE FIELD PRIOR TO INSTALLATION.
5. COORINDATE EXACT PLACEMENT OF LIGHT FIXTURES W/ ARCH, LIGHTING DESIGNER AND OWNERS IN THE FIELD. DIMENSIONS PROVIDED FOR REFERENCE ONLY. ALL DIMENSIONS TO BE VERIFIED IN FIELD.
6. REFER TC10 /A606 FOR ALIGNMENT OF FIXTURES ON WOOD-PANELED CEILING.
7. COORDINATE EXACT LOCATION OF SPRINKLERS W/ ARCH AND FIRE MARSHAL REQUIREMENTS.

REFLECTED CEILING PLAN LEGEND

CEILING SYMBOLS:

- WP — WORK POINT FOR CEILING TILE/PANEL GRID @ WALL INTERSECTIONS, OR AS NOTED
- 1 S/C — CEILING MOUNTED COMBINATION SMOKE DETECTOR AND CARBON MONOXIDE ALARM
- 8' - 6" CEIL — CEILING HEIGHT ABOVE ASSOCIATED LEVEL'S DATUM, UNO
- PNT-3 — CEILING FINISH
- SPRINKLER, RECESSED AT L1 AND L2, PENDANT AT L3

LIGHT FIXTURES:

REFERENCE LIGHTING DRAWINGS AND SCHEDULE.

- MONOPOINT
- TRACKLIGHT W/ MONOPOINT
- RECESSED ADJUSTABLE DOWNLIGHT - ROUND TRIM FOR GYP CEILING
- RECESSED ADJUSTABLE DOWNLIGHT - ROUND TRIM FOR GYP CEILING - DIRECTED
- RECESSED ADJUSTABLE DOWNLIGHT - SQUARE TRIM FOR WOOD CEILING, REF
- RECESSED ADJUSTABLE DOWNLIGHT - SQUARE TRIM FOR WOOD CEILING - DIRECTED
- FLUSH MOUNT CEILING LIGHT
- UNDERCABINET LIGHT
- EXTERIOR WALL MOUNTED FIXTURE
- SECURITY LIGHT
- PENDANT LIGHT

MECHANICAL & ELECTRICAL FIXTURES:

- CEILING FAN, SEE PLAN FOR SIZE
- MECH RETURN GRILLES (REF: MECH)
- MECH SUPPLY GRILLES (REF: MECH)
- SIDEWALL SUPPLY GRILLE (REF: MECH)
- LINEAR SLOT DIFFUSER

FINISH LEGEND

REPRESENTS FINISHES ON THIS SHEET ONLY, SEE A030 FOR MASTER FINISH LEGEND

FAB-1	12 22 16 - DRAPERY
PNT-3	09 90 00 - PAINTED GYPSUM BOARD, CEILING COLOR - TBD
RS-1	12 24 00 - ROLLER SHADE, MANUAL, LIGHT FILTERING
RS-2	12 24 00 - ROLLER SHADE, MANUAL, BLACKOUT AND LIGHT FILTERING
WD-2	07 46 23 - VERTICAL T&G KEBONY SIDING, REF DETAILS AND A030
WD-3	07 36 23 - HORIZONTAL WOOD KEBONY SLATS OVER STEEL SUPPORTS. STEEL SUPPORTS TO BE PAINTED WITH HIGH PERFORMANCE PAINT, REF DETAILS AND A030
WD-6	07 46 23 - EXTERIOR WOOD SOFFIT
WD-10	07 46 23 - INTERIOR WOOD SOFFIT

0' 2' 4' 8'

MILLER HULL

The Miller Hull Partnership, LLP
Architecture and Planning
Polson Building
71 Columbia, Sixth Floor
Seattle, WA 98104

Phone: 206.682.6837
Contact: Name

STAMP

REGISTERED ARCHITECT
9309
BRIAN COLEY
STATE OF WASHINGTON

MERCER ISLAND
REVIEWED FOR CODE COMPLIANCE
March 27, 2023
SITE COPY

MERCER ISLAND HOUSE: CASCADE

6838 96TH AVE SE
MERCER ISLAND, WA 98040

SUBMITTAL

100% CONSTRUCTION DOCUMENTS

FEBRUARY 24, 2023

REVISIONS

No.	Description	Date

Drawn: AN
Checked: AN
M|H Proj No.: A20.0085.00
Issue Date: FEBRUARY 24, 2023

SHEET

LEVEL 2 - REFLECTED CEILING PLAN

A123

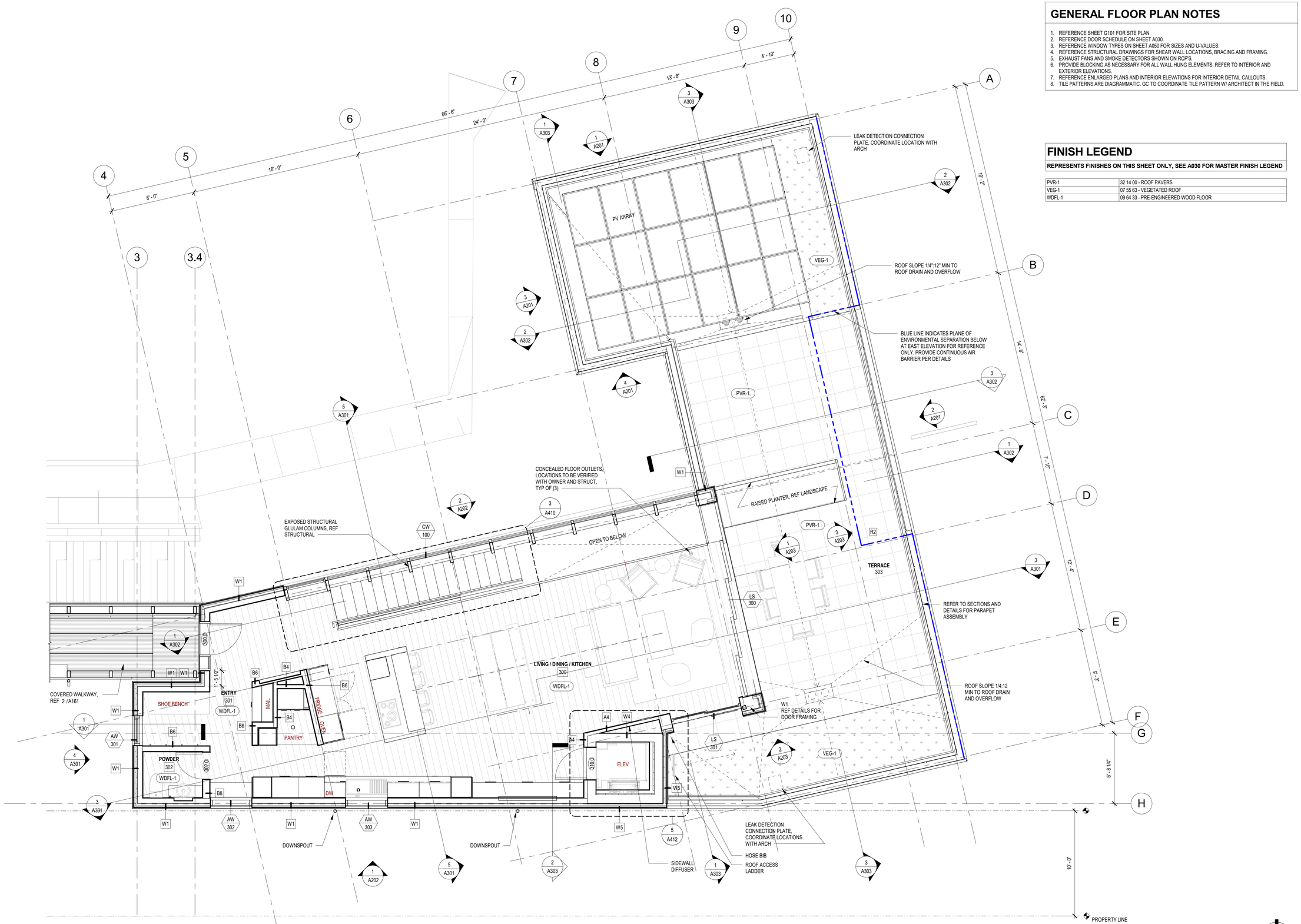

1 A131 **LEVEL 3 FLOOR PLAN**

1/4" = 1'-0"

GENERAL FLOOR PLAN NOTES

1. REFERENCE SHEET G101 FOR SITE PLAN.
2. REFERENCE DOOR SCHEDULE ON SHEET A030.
3. REFERENCE WINDOW TYPES ON SHEET A050 FOR SIZES AND U-VALUES.
4. REFERENCE STRUCTURAL DRAWINGS FOR SHEAR WALL LOCATIONS, BRACING AND FRAMING.
5. EXHAUST FANS AND SMOKE DETECTORS SHOWN ON RCP'S.
6. PROVIDE BLOCKING AS NECESSARY FOR ALL WALL HUNG ELEMENTS, REFER TO INTERIOR AND EXTERIOR ELEVATIONS.
7. REFERENCE ENLARGED PLANS AND INTERIOR ELEVATIONS FOR INTERIOR DETAIL CALLOUTS.
8. TILE PATTERNS ARE DIAGRAMMATIC. GC TO COORDINATE TILE PATTERN W/ ARCHITECT IN THE FIELD.

FINISH LEGEND

REPRESENTS FINISHES ON THIS SHEET ONLY, SEE A030 FOR MASTER FINISH LEGEND

PVR-1	32 14 00 - ROOF PAVERS
VEG-1	07 55 63 - VEGETATED ROOF
WDFL-1	09 64 33 - PRE-ENGINEERED WOOD FLOOR

MILLER HULL

The Miller Hull Partnership, LLP
Architecture and Planning
Polson Building
71 Columbia, Sixth Floor
Seattle, WA 98104

Phone: 206.682.6837
Contact: Name

STAMP

9309 REGISTERED ARCHITECT BRIAN COLLIN STATE OF WASHINGTON

MERCER ISLAND REVIEWED FOR CODE COMPLIANCE March 27, 2023 SITE COPY

MERCER ISLAND HOUSE: CASCADE

6838 96TH AVE SE
MERCER ISLAND, WA 98040

SUBMITTAL

100% CONSTRUCTION DOCUMENTS

FEBRUARY 24, 2023

REVISIONS

No.	Description	Date

Drawn: AN
Checked: AN
M|H Proj No.: A20.0085.00

Issue Date: FEBRUARY 24, 2023

SHEET

LEVEL 3 - FLOOR PLAN

A131

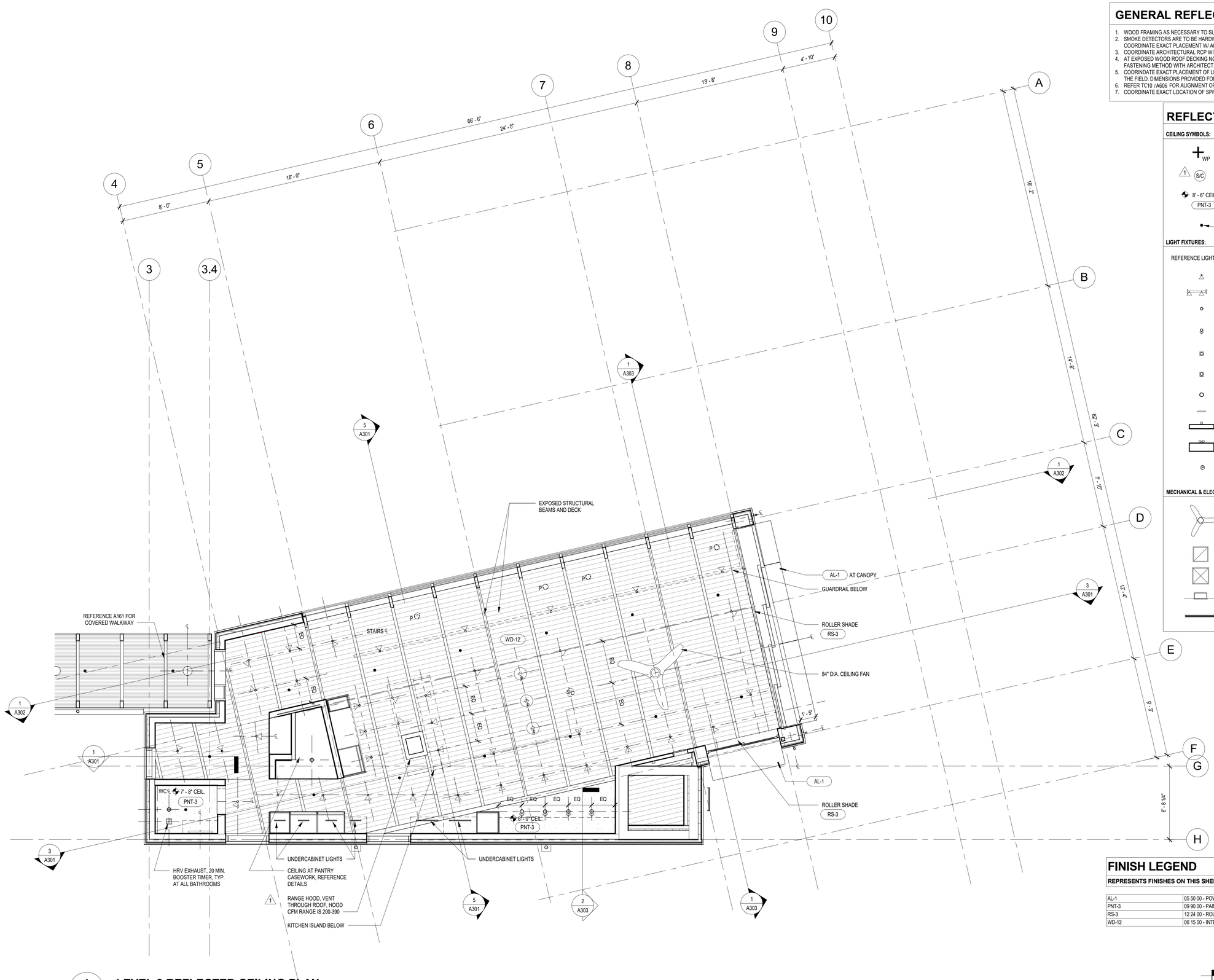

1 LEVEL 3 REFLECTED CEILING PLAN

A133

1/4" = 1'-0"

GENERAL REFLECTED CEILING PLAN NOTES

1. WOOD FRAMING AS NECESSARY TO SUPPORT DROPPED CEILINGS. REFERENCE STRUCTURAL.
2. SMOKE DETECTORS ARE TO BE HARDWIRED AND INTER-CONNECTED WITH A BATTERY BACKUP. COORDINATE EXACT PLACEMENT W/ ARCH IN THE FIELD.
3. COORDINATE ARCHITECTURAL RCP WITH MECHANICAL, ELECTRICAL, PLUMBING AND LIGHTING.
4. AT EXPOSED WOOD ROOF DECKING NO FASTENERS ARE TO BE VISIBLE THROUGH DECKING. CONFIRM FASTENING METHOD WITH ARCHITECT IN THE FIELD PRIOR TO INSTALLATION.
5. COORINDATE EXACT PLACEMENT OF LIGHT FIXTURES W/ ARCH, LIGHTING DESIGNER AND OWNERS IN THE FIELD. DIMENSIONS PROVIDED FOR REFERENCE ONLY. ALL DIMENSIONS TO BE VERIFIED IN FIELD.
6. REFER TC10 / A606 FOR ALIGNMENT OF FIXTURES ON WOOD-PANELED CEILING.
7. COORDINATE EXACT LOCATION OF SPRINKLERS W/ ARCH AND FIRE MARSHAL REQUIREMENTS.

REFLECTED CEILING PLAN LEGEND

CEILING SYMBOLS:

- WP — WORK POINT FOR CEILING TILE/PANEL GRID @ WALL INTERSECTIONS, OR AS NOTED
- 1 S/C — CEILING MOUNTED COMBINATION SMOKE DETECTOR AND CARBON MONOXIDE ALARM
- 8' - 6" CEIL — CEILING HEIGHT ABOVE ASSOCIATED LEVEL'S DATUM, UNO
- PNT-3 — CEILING FINISH
- SPRINKLER, RECESSED AT L1 AND L2, PENDANT AT L3

LIGHT FIXTURES:

REFERENCE LIGHTING DRAWINGS AND SCHEDULE.

- MONOPOINT
- TRACKLIGHT W/ MONOPOINT
- RECESSED ADJUSTABLE DOWNLIGHT - ROUND TRIM FOR GYP CEILING
- RECESSED ADJUSTABLE DOWNLIGHT - ROUND TRIM FOR GYP CEILING - DIRECTED
- RECESSED ADJUSTABLE DOWNLIGHT - SQUARE TRIM FOR WOOD CEILING, REF
- RECESSED ADJUSTABLE DOWNLIGHT - SQUARE TRIM FOR WOOD CEILING - DIRECTED
- FLUSH MOUNT CEILING LIGHT
- UNDERCABINET LIGHT
- EXTERIOR WALL MOUNTED FIXTURE
- SECURITY LIGHT
- PENDANT LIGHT

MECHANICAL & ELECTRICAL FIXTURES:

- CEILING FAN, SEE PLAN FOR SIZE
- MECH RETURN GRILLES (REF: MECH)
- MECH SUPPLY GRILLES (REF: MECH)
- SIDEWALL SUPPLY GRILLE (REF: MECH)
- LINEAR SLOT DIFFUSER

FINISH LEGEND

REPRESENTS FINISHES ON THIS SHEET ONLY, SEE A030 FOR MASTER FINISH LEGEND

AL-1	05 50 00 - POWDERCOATED ALUMINUM
PNT-3	09 90 00 - PAINTED GYPSUM BOARD, CEILING COLOR - TBD
RS-3	12 24 00 - ROLLER SHADE, AUTOMATED, LIGHT FILTERING
WD-12	06 15 00 - INTERIOR STAIR TREAD

0' 2' 4' 8'

MILLER HULL

The Miller Hull Partnership, LLP
Architecture and Planning
Polson Building
71 Columbia, Sixth Floor
Seattle, WA 98104

Phone: 206.682.6837
Contact: Name

STAMP

9309 REGISTERED ARCHITECT BRIAN COLLIN STATE OF WASHINGTON

MERCER ISLAND REVIEWED FOR CODE COMPLIANCE March 27, 2023 SITE COPY

MERCER ISLAND HOUSE: CASCADE

6838 96TH AVE SE
MERCER ISLAND, WA 98040

SUBMITTAL

100% CONSTRUCTION DOCUMENTS

FEBRUARY 24, 2023

REVISIONS

No.	Description	Date
1	Building Permit Resubmittal	10/27/22

Drawn: AN
Checked: AN
M|H Proj No.: A20.0085.00

Issue Date: FEBRUARY 24, 2023

SHEET

LEVEL 3 - REFLECTED CEILING PLAN

A133

GENERAL ROOF PLAN NOTES

1. SEE SECTIONS AND DETAILS FOR ROOF TYPE CALL OUTS.
2. REFERENCE MECHANICAL NARRATIVE FOR PV ARRAY BASIS OF DESIGN.

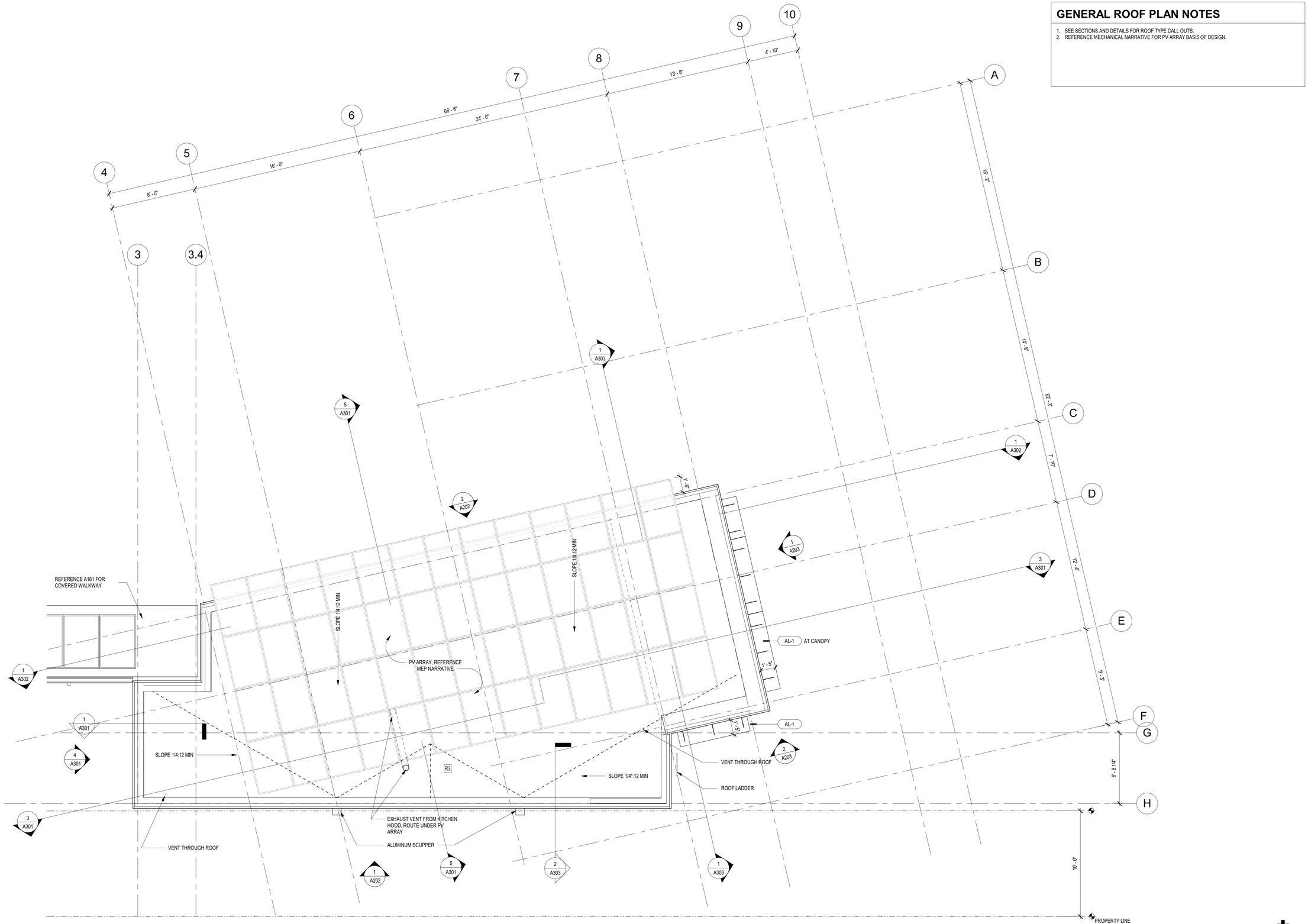

1 A141 **ROOF PLAN**
1/4" = 1'-0"

MILLER HULL

The Miller Hull Partnership, LLP
Architecture and Planning
Polson Building
71 Columbia, Sixth Floor
Seattle, WA 98104

Phone: 206.682.6837
Contact: Name

STAMP

9309 REGISTERED ARCHITECT BRIAN COURY STATE OF WASHINGTON

REVIEWED FOR CODE COMPLIANCE
March 27, 2023
SITE COPY

MERCER ISLAND HOUSE: CASCADE

6838 96TH AVE SE
MERCER ISLAND, WA 98040

SUBMITTAL

100% CONSTRUCTION DOCUMENTS

FEBRUARY 24, 2023

REVISIONS

No.	Description	Date

Drawn: AN
Checked: AN
M|H Proj No.: A20.0085.00

Issue Date: FEBRUARY 24, 2023

SHEET

ROOF PLAN
A141

GENERAL GARAGE PLAN NOTES

1. REFERENCE SHEET G101 FOR SITE PLAN.
2. REFERENCE DOOR SCHEDULE ON SHEET A030.
3. REFERENCE WINDOW TYPES ON SHEET A050 FOR SIZES AND U-VALUES.
4. REFERENCE STRUCTURAL DRAWINGS FOR SHEAR WALL LOCATIONS, BRACING AND FRAMING.
5. PROVIDE BLOCKING AS NECESSARY FOR ALL WALL HUNG ELEMENTS, REFER TO INTERIOR AND EXTERIOR ELEVATIONS.
6. PROVIDE INSULATION AND HEAT TRACE FREEZE PROTECTION FOR WATER, SOIL, AND WASTE PIPES AT GARAGE.

FINISH LEGEND

REPRESENTS FINISHES ON THIS SHEET ONLY, SEE A030 FOR MASTER FINISH LEGEND

CONC-3	03 30 00 - BROOM FINISH

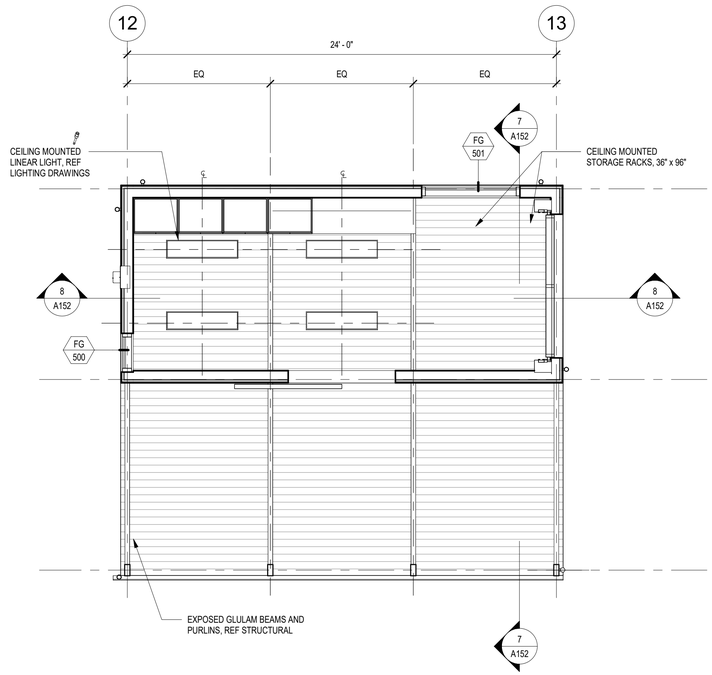

4 A151 **GARAGE - RCP**
1/4" = 1'-0"

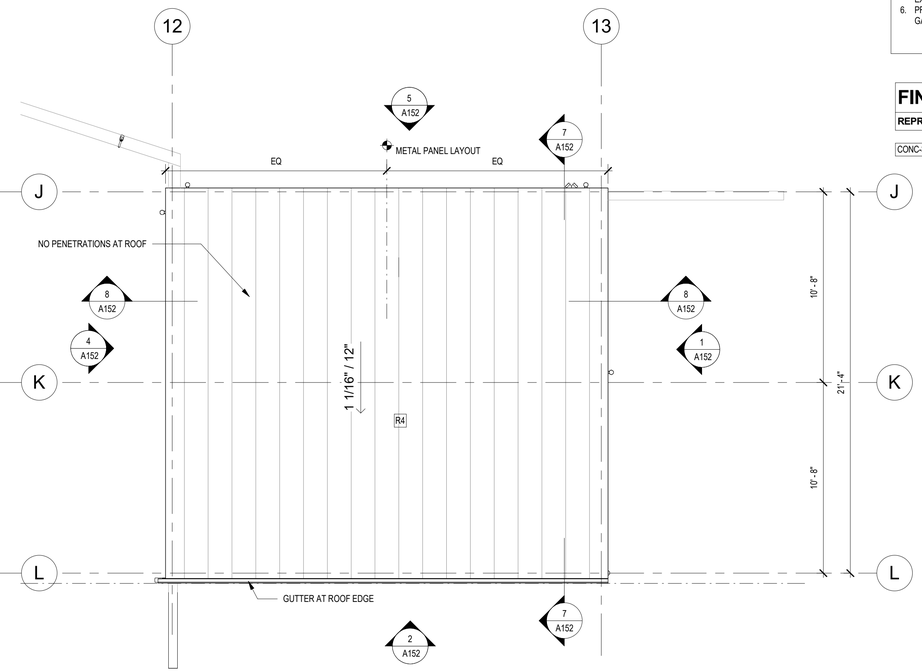

3 A151 **GARAGE - ROOF PLAN**
1/4" = 1'-0"

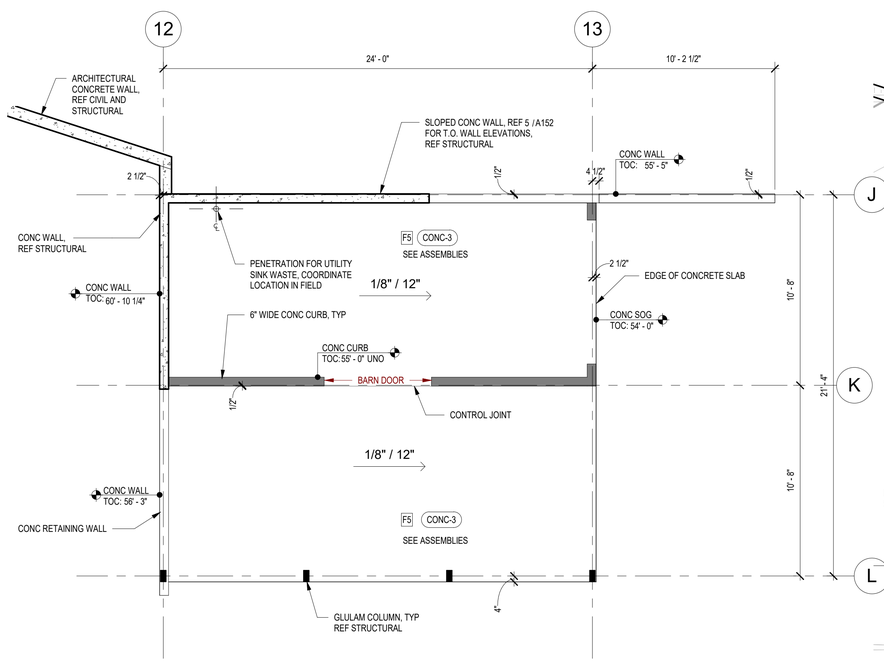

2 A151 **GARAGE - SLAB PLAN**
1/4" = 1'-0"

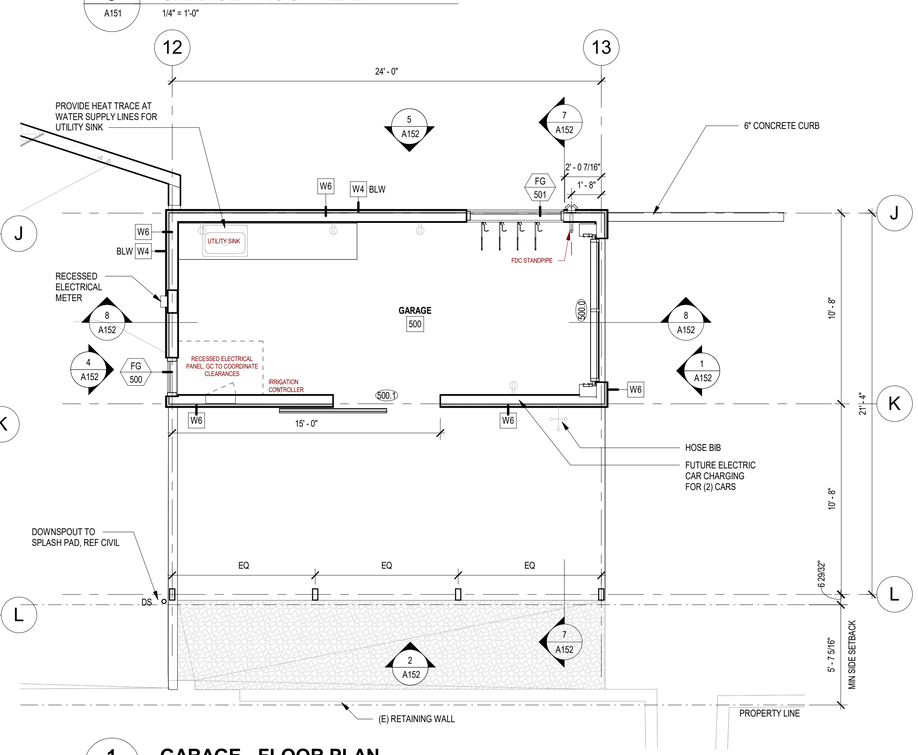

1 A151 **GARAGE - FLOOR PLAN**
1/4" = 1'-0"

0' 2' 4' 8'

MILLER HULL

The Miller Hull Partnership, LLP
Architecture and Planning
Polson Building
71 Columbia, Sixth Floor
Seattle, WA 98104

Phone: 206.682.6837
Contact: Name

STAMP

9309 REGISTERED ARCHITECT BRIAN COLEY STATE OF WASHINGTON

MERCER ISLAND REVIEWED FOR CODE COMPLIANCE March 27, 2023 SITE COPY WASHINGTON

MERCER ISLAND HOUSE: CASCADE

6838 96TH AVE SE
MERCER ISLAND, WA 98040

SUBMITTAL

100% CONSTRUCTION DOCUMENTS

FEBRUARY 24, 2023

REVISIONS

No.	Description	Date

Drawn: KR
Checked: AN
M|H Proj No.: A20.0085.00

Issue Date: FEBRUARY 24, 2023

SHEET

GARAGE PLANS
A151

FINISH LEGEND

REPRESENTS FINISHES ON THIS SHEET ONLY, SEE A030 FOR MASTER FINISH LEGEND

CJ-1	03 30 00 - CONTROL JOINT AT CIP ARCHITECTURAL CONCRETE, CHAMFER STRIP
CONC-1	03 30 00 - CIP ARCHITECTURAL CONCRETE, FORM TIE LOCATIONS TO BE COORDINATED IN SHOP DRAWINGS
CTOP-4	12 36 00 - COUNTERTOP, TBD
PNT-1	09 90 00 - PAINTED GYPSUM BOARD, WHITE
ST-1	09 93 13 - INTERIOR WOOD FINISH
WD-2	07 46 23 - VERTICAL T&G KEBONY SIDING, REF DETAILS AND A030
WD-11	06 40 00 - DOUGLAS FIR INTERIOR PANELING

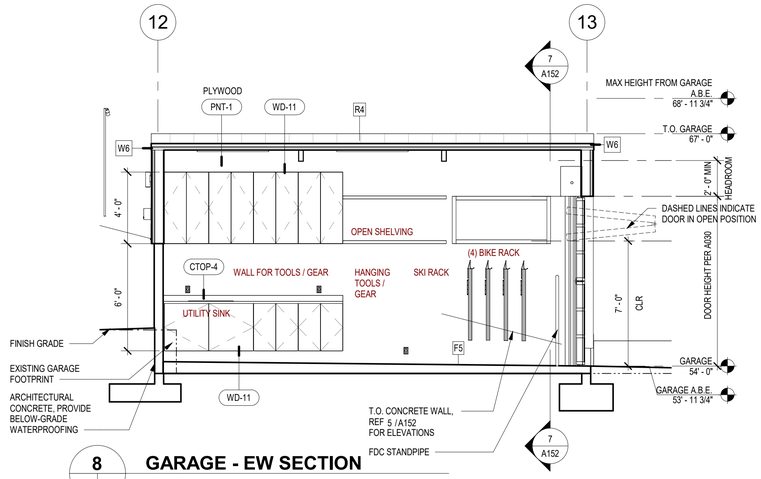

8 A151 A152 **GARAGE - EW SECTION**
1/4" = 1'-0"

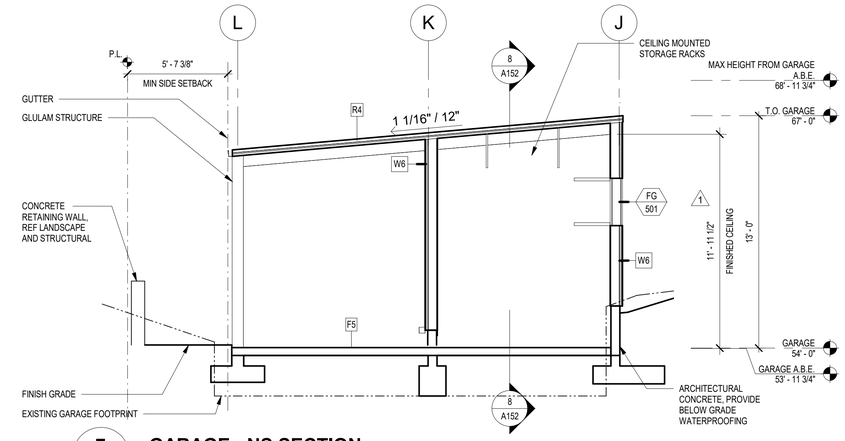

7 A151 A152 **GARAGE - NS SECTION**
1/4" = 1'-0"

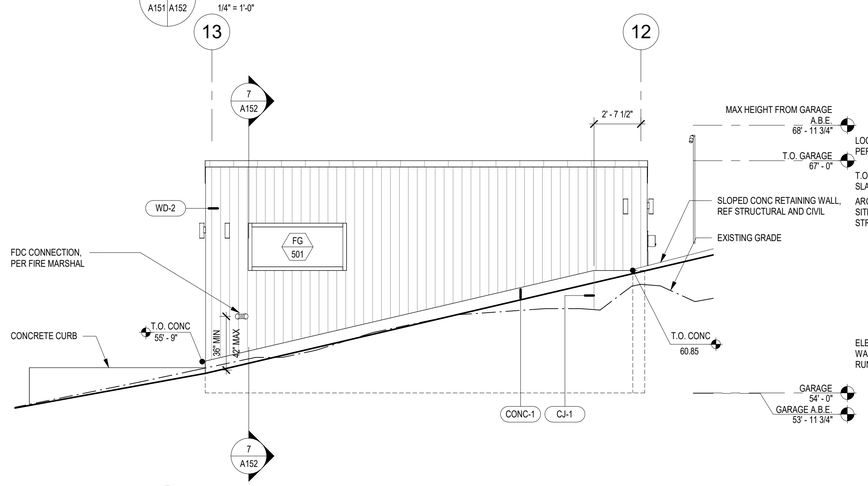

5 A151 A152 **GARAGE - NORTH ELEVATION**
1/4" = 1'-0"

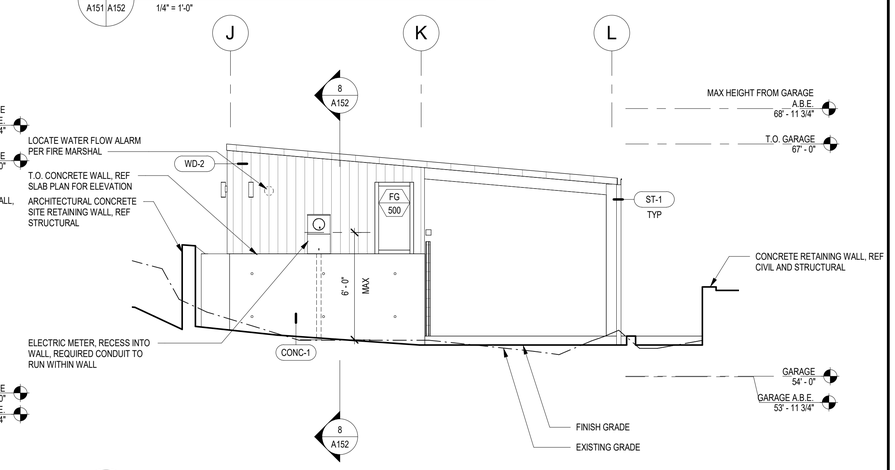

4 A151 A152 **GARAGE - WEST ELEVATION**
1/4" = 1'-0"

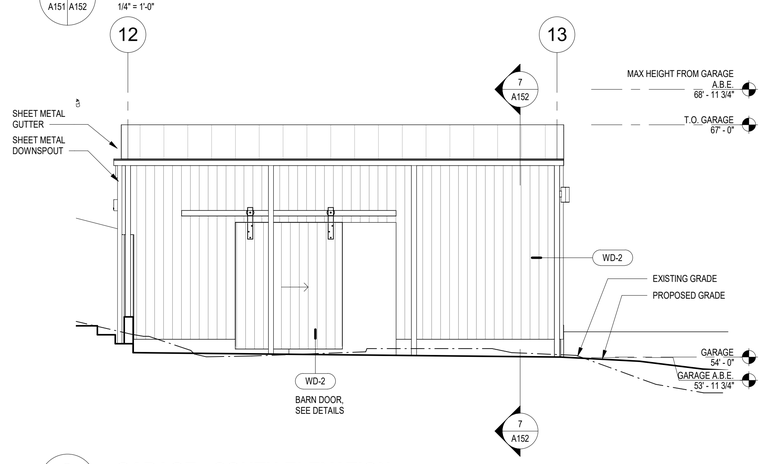

2 A151 A152 **GARAGE - SOUTH ELEVATION**
1/4" = 1'-0"

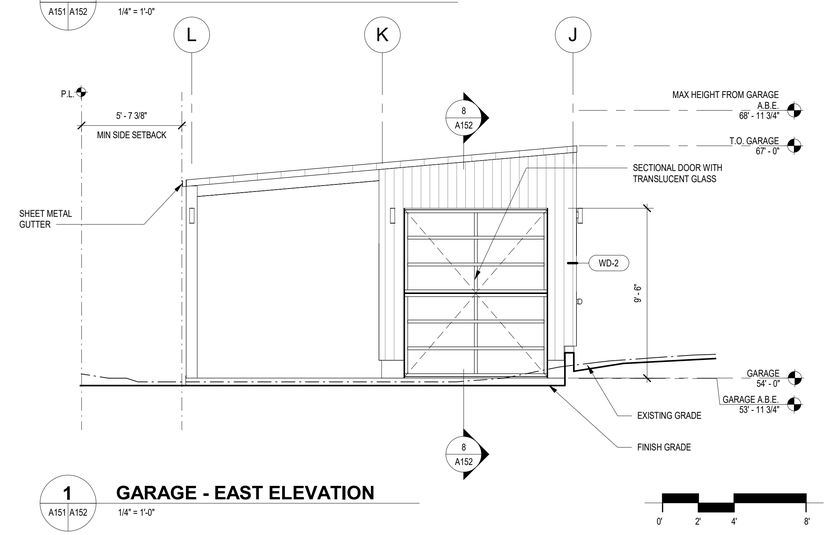

1 A151 A152 **GARAGE - EAST ELEVATION**
1/4" = 1'-0"

0' 2' 4' 8'

MILLER HULL

The Miller Hull Partnership, LLP
Architecture and Planning
Polson Building
71 Columbia, Sixth Floor
Seattle, WA 98104

Phone: 206.682.6837
Contact: Name

STAMP

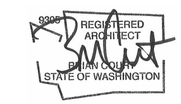

MERCER ISLAND HOUSE: CASCADE

6838 96TH AVE SE
MERCER ISLAND, WA 98040

SUBMITTAL

100% CONSTRUCTION DOCUMENTS

FEBRUARY 24, 2023

REVISIONS

No.	Description	Date
1	Building Permit Resubmittal	10/27/22

Drawn: KR
Checked: AN
M|H Proj No.: A20.0085.00

Issue Date: FEBRUARY 24, 2023

SHEET

1 **GARAGE ELEVATIONS, SECTIONS**

A152

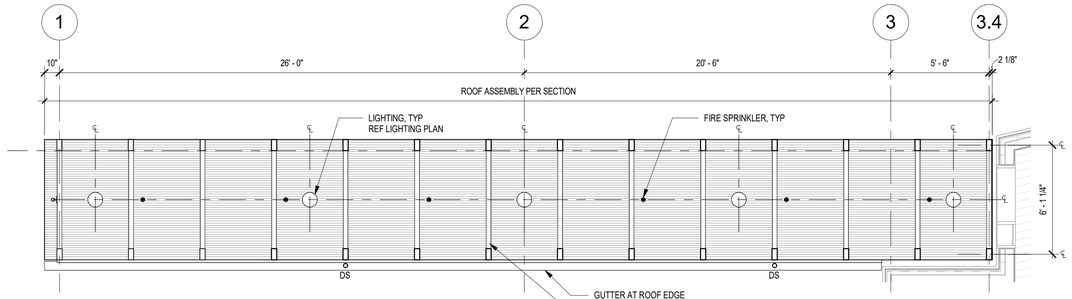

4 A161 **COVERED WALKWAY - RCP**
1/4" = 1'-0"

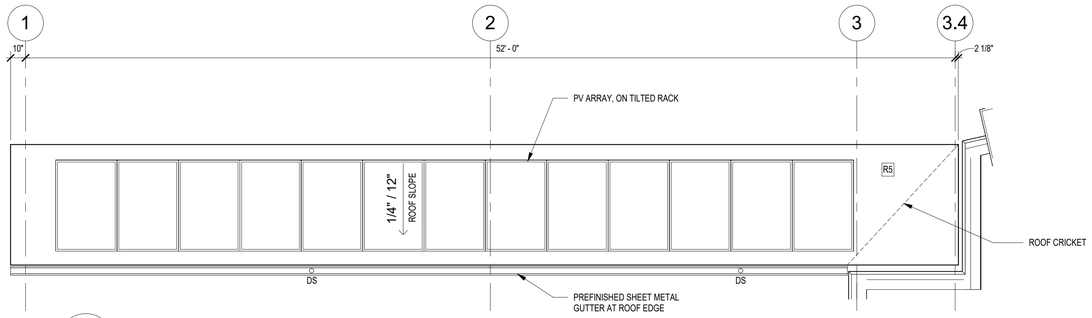

3 A161 **COVERED WALKWAY - ROOF PLAN**
1/4" = 1'-0"

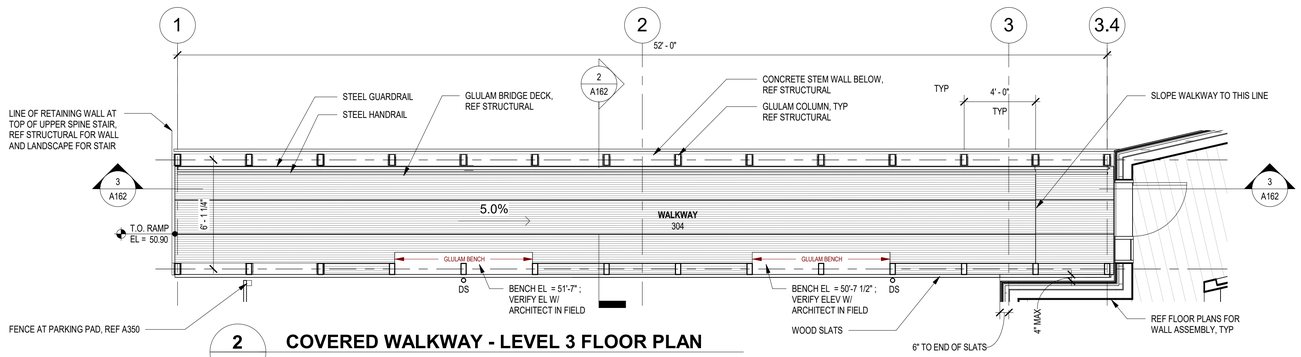

2 A161 **COVERED WALKWAY - LEVEL 3 FLOOR PLAN**
1/4" = 1'-0"

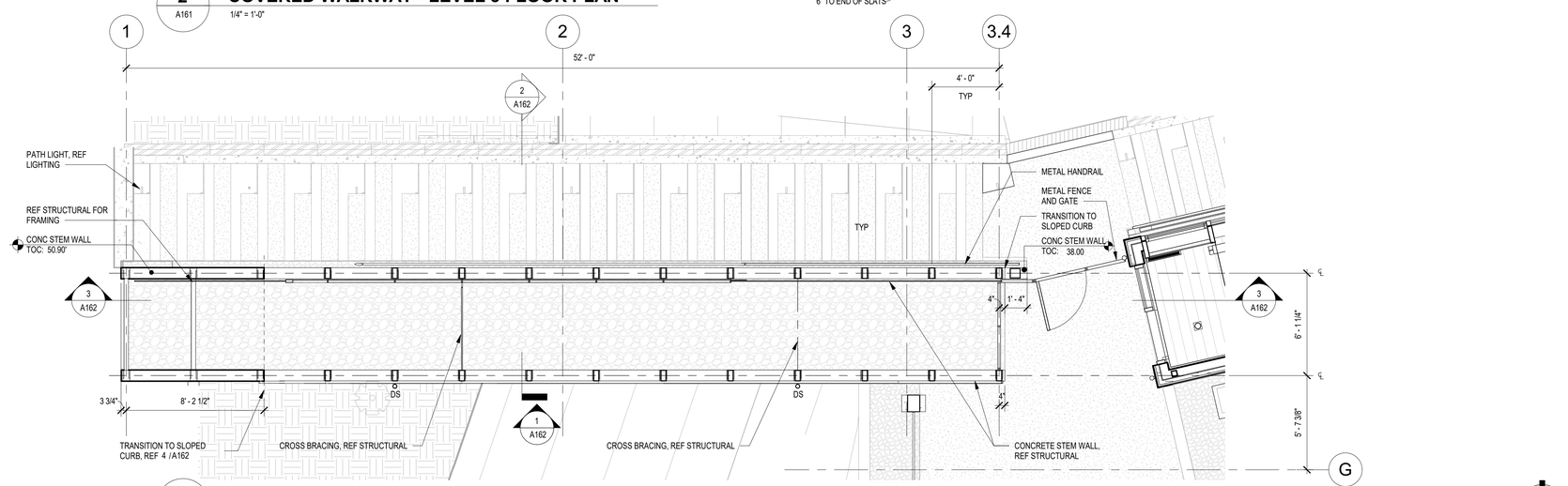

1 A161 **COVERED WALKWAY - LEVEL 2 FLOOR PLAN / SLAB PLAN**
1/4" = 1'-0"

GENERAL COVERED WALKWAY PLAN NOTES

1. REFERENCE SHEET G101 FOR SITE PLAN.
2. REFERENCE DOOR SCHEDULE ON SHEET A030.
3. REFERENCE WINDOW TYPES ON SHEET A050 FOR SIZES AND U-VALUES.
4. REFERENCE STRUCTURAL DRAWINGS FOR SHEAR WALL LOCATIONS, BRACING AND FRAMING.
5. PROVIDE BLOCKING AS NECESSARY FOR ALL WALL HUNG ELEMENTS, REFER TO INTERIOR AND EXTERIOR ELEVATIONS.
6. PROVIDE INSULATION AND HEAT TRACE FREEZE PROTECTION FOR WATER, SOIL, AND WASTE PIPES AT GARAGE.
7. COORDINATE ARCHITECTURAL RCP WITH MECHANICAL, ELECTRICAL, PLUMBING AND LIGHTING.
8. AT EXPOSED WOOD ROOF DECKING NO FASTENERS ARE TO BE VISIBLE THROUGH DECKING. CONFIRM FASTENING METHOD WITH ARCHITECT IN THE FIELD PRIOR TO INSTALLATION.
9. COORINDATE EXACT PLACEMENT OF LIGHT FIXTURES W/ ARCH, LIGHTING DESIGNER AND OWNERS IN THE FIELD. DIMENSIONS PROVIDED FOR REFERENCE ONLY. ALL DIMENSIONS TO BE VERIFIED IN FIELD.
10. COORDINATE EXACT LOCATION OF SPRINKLERS W/ ARCH AND FIRE MARSHAL REQUIREMENTS.

MILLER HULL

The Miller Hull Partnership, LLP
Architecture and Planning
Polson Building
71 Columbia, Sixth Floor
Seattle, WA 98104

Phone: 206.682.6837
Contact: Name

STAMP

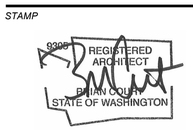

MERCER ISLAND HOUSE: CASCADE

6838 96TH AVE SE
MERCER ISLAND, WA 98040

SUBMITTAL

100% CONSTRUCTION DOCUMENTS

FEBRUARY 24, 2023

REVISIONS

No.	Description	Date

Drawn: KR
Checked: AN
M|H Proj No.: A20.0085.00

Issue Date: FEBRUARY 24, 2023

SHEET

COVERED WALKWAY PLANS

A161

FINISH LEGEND

REPRESENTS FINISHES ON THIS SHEET ONLY, SEE A030 FOR MASTER FINISH LEGEND

CJ-1	03 30 00 - CONTROL JOINT AT CIP ARCHITECTURAL CONCRETE, CHAMFER STRIP
CONC-1	03 30 00 - CIP ARCHITECTURAL CONCRETE, FORM TIE LOCATIONS TO BE COORDINATED IN SHOP DRAWINGS
HP-1	09 97 13 - HIGH PERFORMANCE COATING
MP-1	05 51 41 - PERFORATED METAL PANEL
SM-1	07 62 00 - SHEET METAL TRIM, REFERENCE DETAILS. FINISH TO MATCH ADJACENT MATERIAL
ST-2	09 93 13 - EXTERIOR WOOD FINISH
ST-3	09 93 13 - EXTERIOR WOOD FINISH - WALKING SURFACE
WD-4	07 36 23 - HORIZONTAL WOOD KEBONY SLATS OVER WOOD SUPPORTS, REF DETAILS AND A030
WD-13	06 15 00 - EXTERIOR GLULAM DECKING

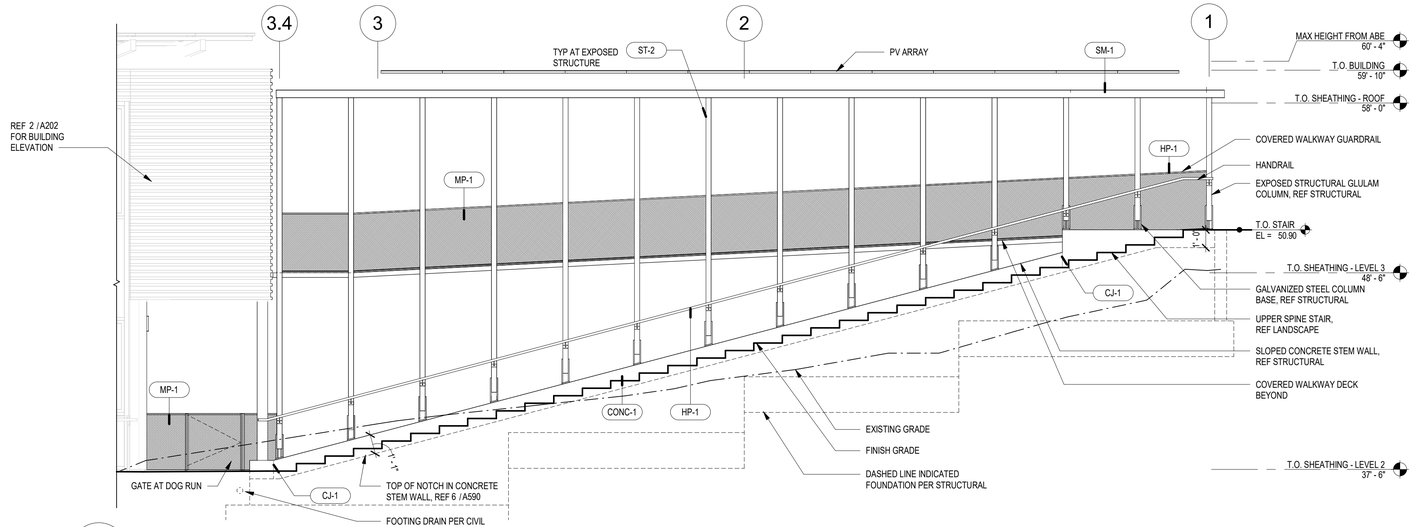

4 A162 **NORTH ELEVATION - COVERED WALKWAY AT STAIR**
1/4" = 1'-0"

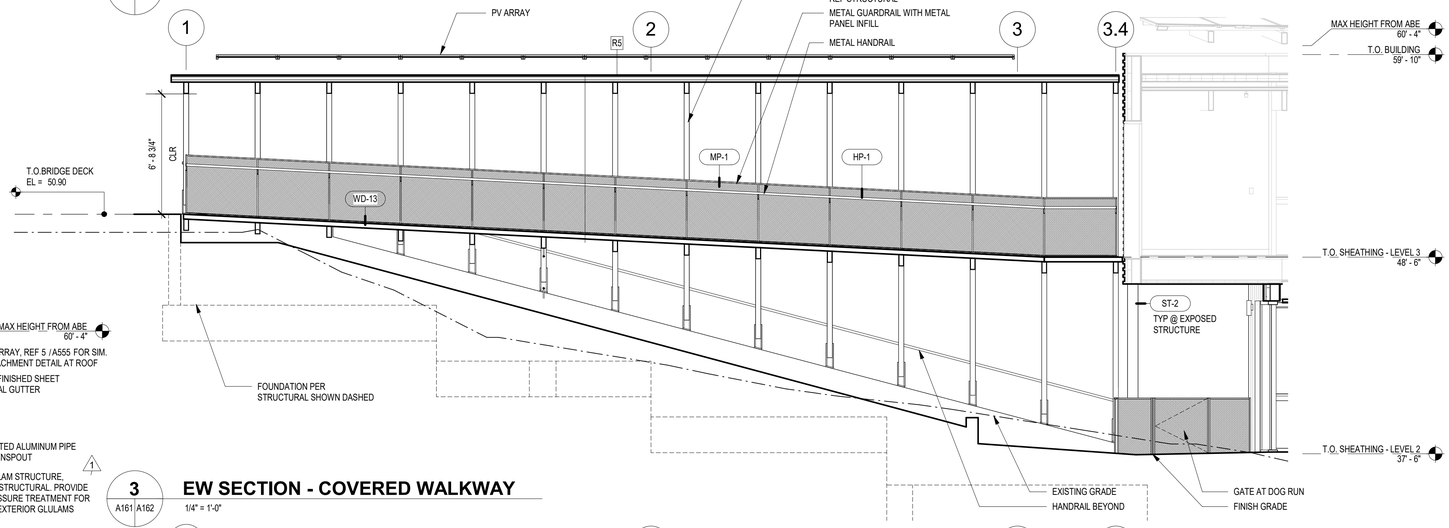

3 A161 A162 **EW SECTION - COVERED WALKWAY**
1/4" = 1'-0"

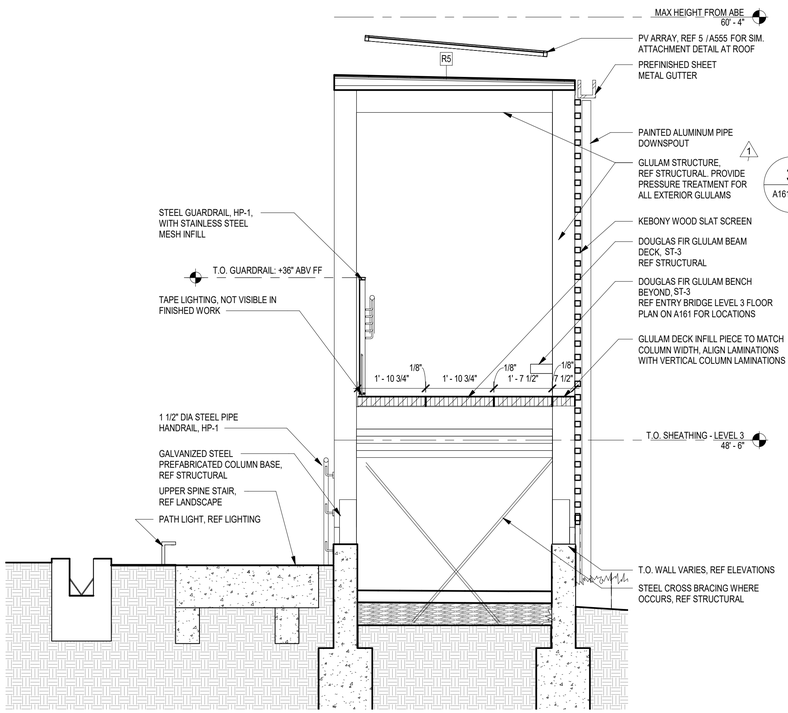

2 A161 A162 **NS SECTION - COVERED WALKWAY**
1/2" = 1'-0"

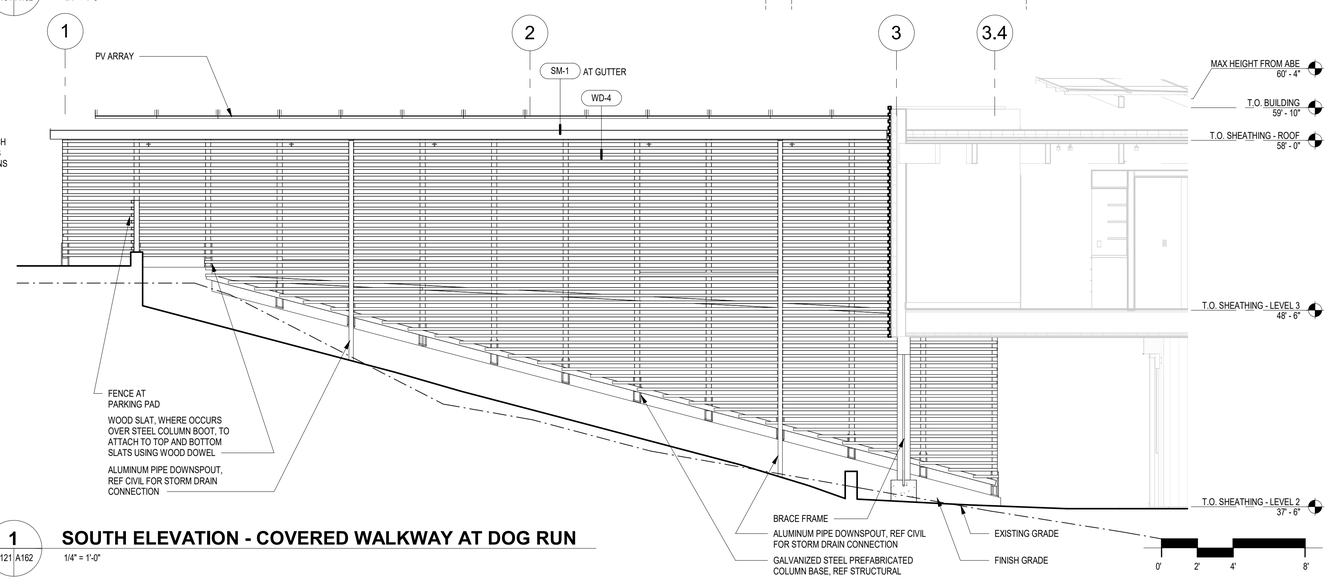

1 A121 A162 **SOUTH ELEVATION - COVERED WALKWAY AT DOG RUN**
1/4" = 1'-0"

MILLER HULL

The Miller Hull Partnership, LLP
Architecture and Planning
Polson Building
71 Columbia, Sixth Floor
Seattle, WA 98104

Phone: 206.682.6837
Contact: Name

STAMP

9309 REGISTERED ARCHITECT BRIAN COLLIN STATE OF WASHINGTON

MERCER ISLAND REVIEWED FOR CODE COMPLIANCE March 27, 2023 SITE COPY

MERCER ISLAND HOUSE: CASCADE

6838 96TH AVE SE
MERCER ISLAND, WA 98040

SUBMITTAL

100% CONSTRUCTION DOCUMENTS

FEBRUARY 24, 2023

REVISIONS

No.	Description	Date
1	Building Permit Resubmittal	10/27/22

Drawn: KR
Checked: AN
M|H Proj No.: A20.0085.00

Issue Date: FEBRUARY 24, 2023

SHEET

COVERED WALKWAY ELEV, SECTIONS

A162

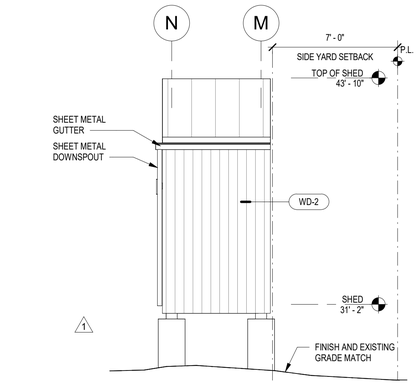

4 A171 **SHED - EAST**
1/4" = 1'-0"

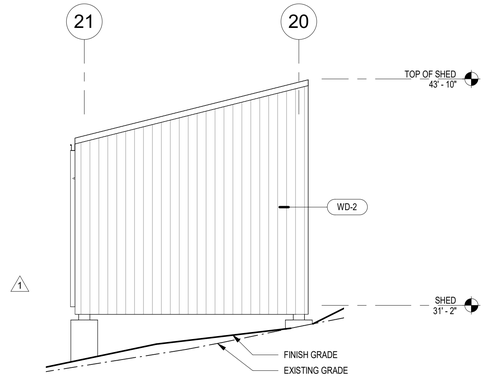

5 A171 **SHED - NORTH**
1/4" = 1'-0"

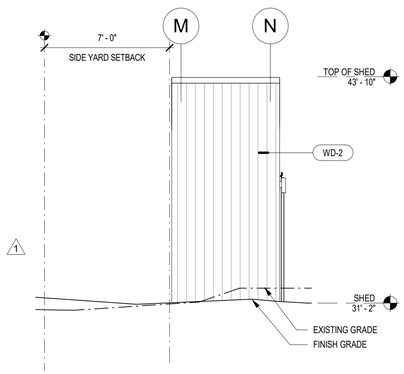

6 A171 **SHED - WEST**
1/4" = 1'-0"

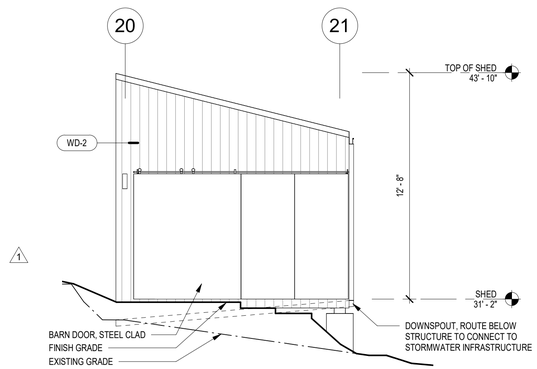

3 A171 **SHED - SOUTH**
1/4" = 1'-0"

FINISH LEGEND

REPRESENTS FINISHES ON THIS SHEET ONLY, SEE A030 FOR MASTER FINISH LEGEND

WD-2	07 46 23 - VERTICAL T&G KEBONY SIDING, REF DETAILS AND A030

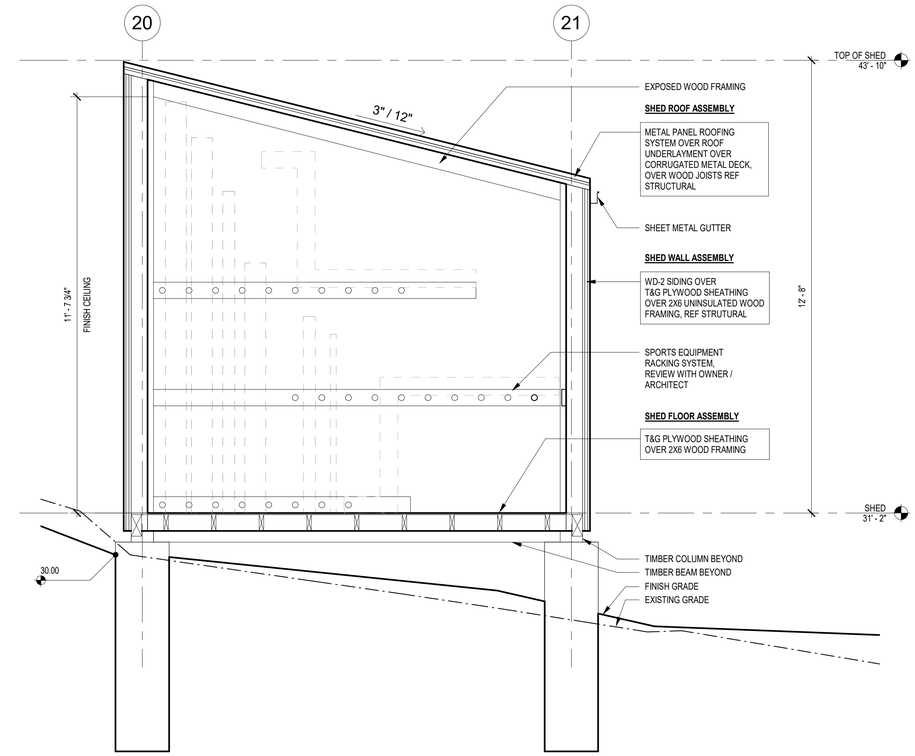

2 A171 **SHED - EW SECTION**
1/2" = 1'-0"

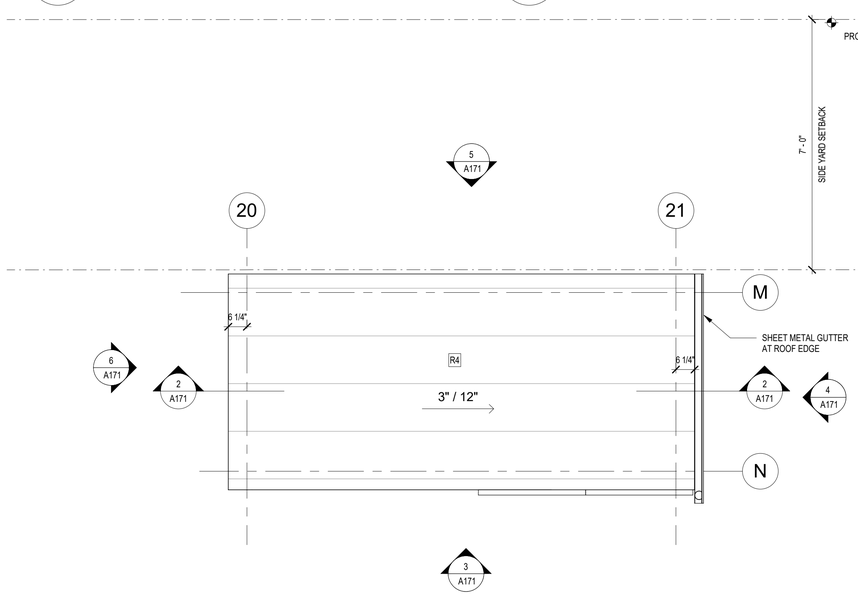

7 A171 **ENL PLAN - SHED ROOF PLAN**
1/2" = 1'-0"

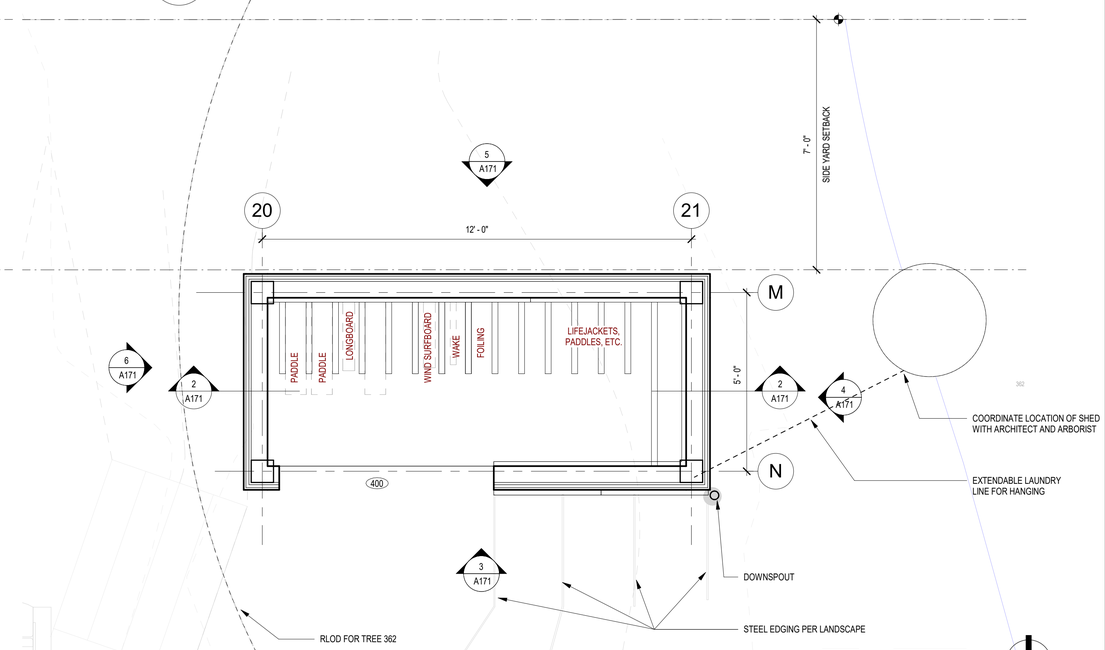

1 A171 **ENL PLAN - SHED**
1/2" = 1'-0"

MILLER HULL

The Miller Hull Partnership, LLP
Architecture and Planning
Polson Building
71 Columbia, Sixth Floor
Seattle, WA 98104

Phone: 206.682.6837
Contact: Name

STAMP

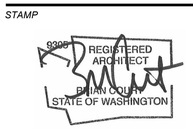

MERCER ISLAND HOUSE: CASCADE

6838 96TH AVE SE
MERCER ISLAND, WA 98040

SUBMITTAL

100% CONSTRUCTION DOCUMENTS

FEBRUARY 24, 2023

REVISIONS

No.	Description	Date
1	Building Permit Resubmittal	10/27/22

Drawn: BM
Checked: AN
M|H Proj No.: A20.0085.00

Issue Date: FEBRUARY 24, 2023

SHEET

SHED PLANS, ELEV, SECTION

A171

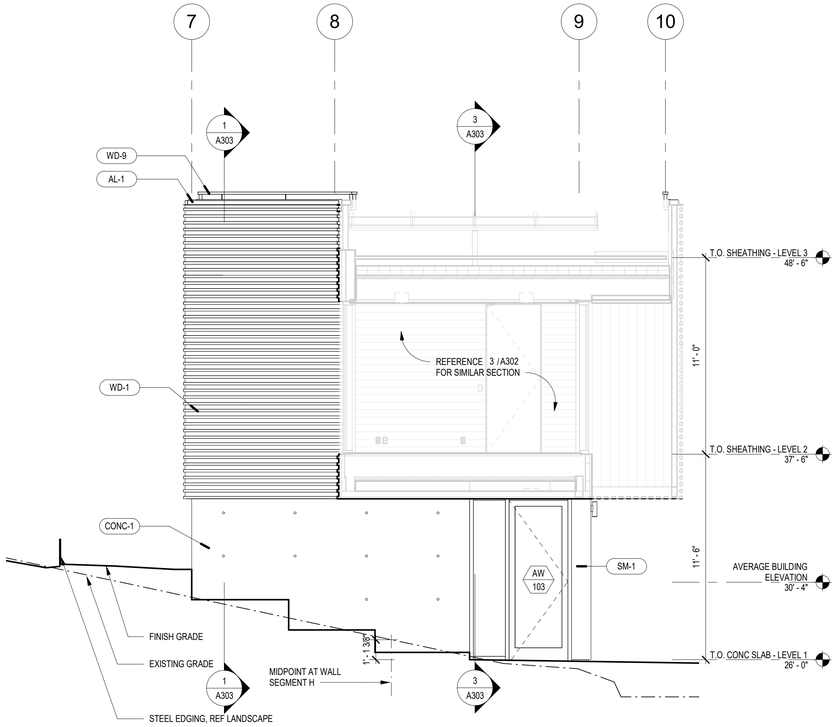

4 A111 A201 **SOUTH ELEVATION - BREEZEWAY**
1/4" = 1'-0"

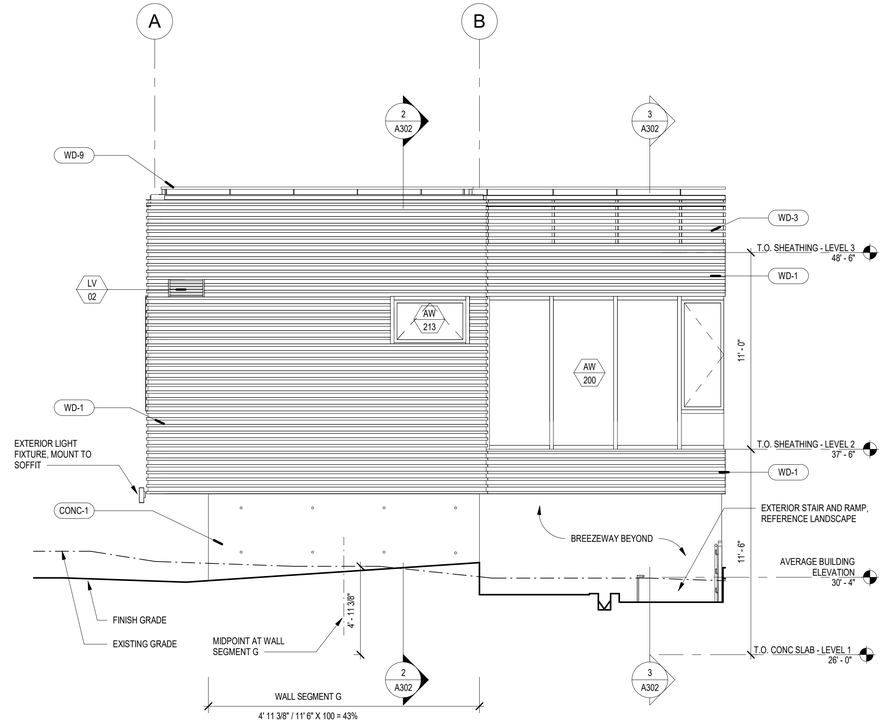

3 A111 A201 **WEST ELEVATION**
1/4" = 1'-0"

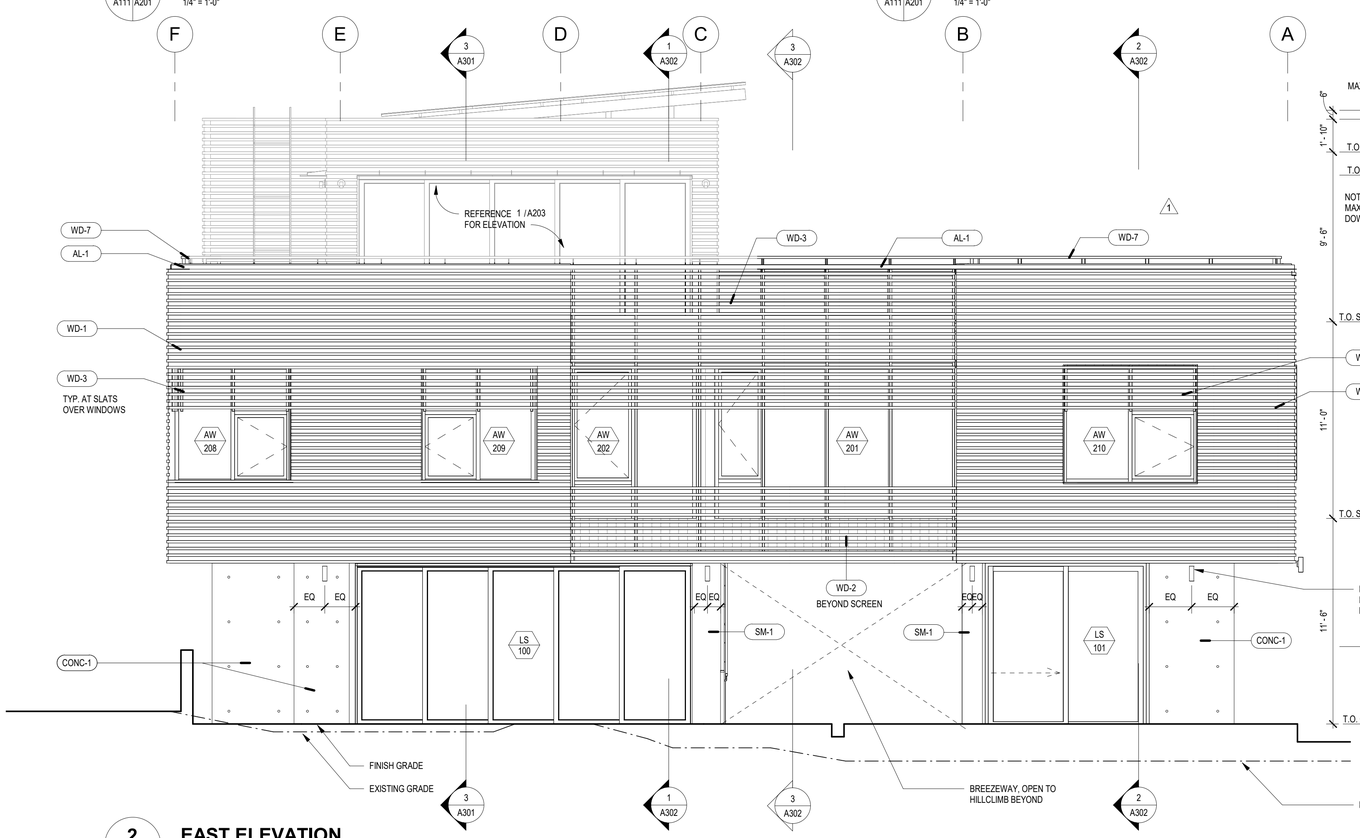

2 A111 A201 **EAST ELEVATION**
1/4" = 1'-0"

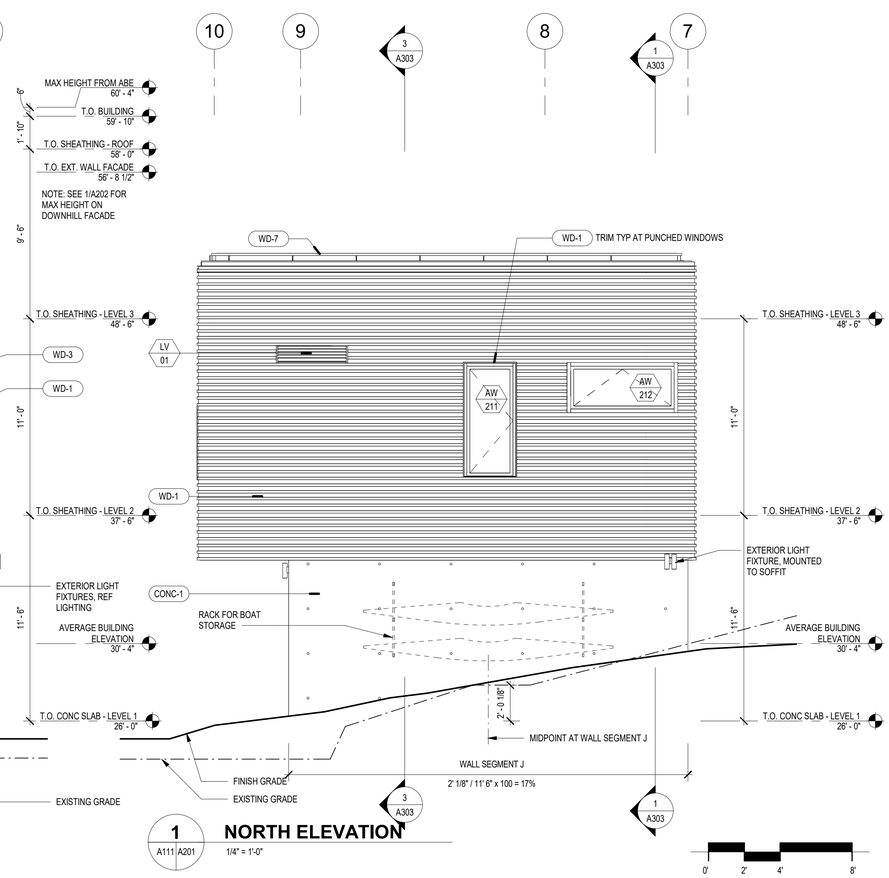

1 A111 A201 **NORTH ELEVATION**
1/4" = 1'-0"

FINISH LEGEND

REPRESENTS FINISHES ON THIS SHEET ONLY, SEE A030 FOR MASTER FINISH LEGEND

AL-1	05 50 00 - POWDERCOATED ALUMINUM
CONC-1	03 30 00 - CIP ARCHITECTURAL CONCRETE, FORM TIE LOCATIONS TO BE COORDINATED IN SHOP DRAWINGS
SM-1	07 62 00 - SHEET METAL TRIM, REFERENCE DETAILS. FINISH TO MATCH ADJACENT MATERIAL
WD-1	07 46 23 - HORIZONTAL RIBBED KEBONY SIDING, REF DETAILS AND A030
WD-2	07 46 23 - VERTICAL T&G KEBONY SIDING, REF DETAILS AND A030
WD-3	07 36 23 - HORIZONTAL WOOD KEBONY SLATS OVER STEEL SUPPORTS. STEEL SUPPORTS TO BE PAINTED WITH HIGH PERFORMANCE PAINT, REF DETAILS AND A030
WD-7	06 40 00 - KEBONY HANDRAIL WITH HP-1 STEEL SUPPORTS
WD-9	06 40 00 - INTERIOR STAIR WOOD HANDRAIL

MILLER HULL

The Miller Hull Partnership, LLP
Architecture and Planning
Polson Building
71 Columbia, Sixth Floor
Seattle, WA 98104

Phone: 206.682.6837
Contact: Name

STAMP

9309 REGISTERED ARCHITECT BRIAN COURY STATE OF WASHINGTON

MERCER ISLAND REVIEWED FOR CODE COMPLIANCE March 27, 2023 SITE COPY

MERCER ISLAND HOUSE: CASCADE

6838 96TH AVE SE
MERCER ISLAND, WA 98040

SUBMITTAL

100% CONSTRUCTION DOCUMENTS

FEBRUARY 24, 2023

REVISIONS

No.	Description	Date
1	Building Permit Resubmittal	10/27/22

Drawn: AN
Checked: AN
M|H Proj No.: A20.0085.00
Issue Date: FEBRUARY 24, 2023

SHEET

BUILDING ELEVATIONS
A201

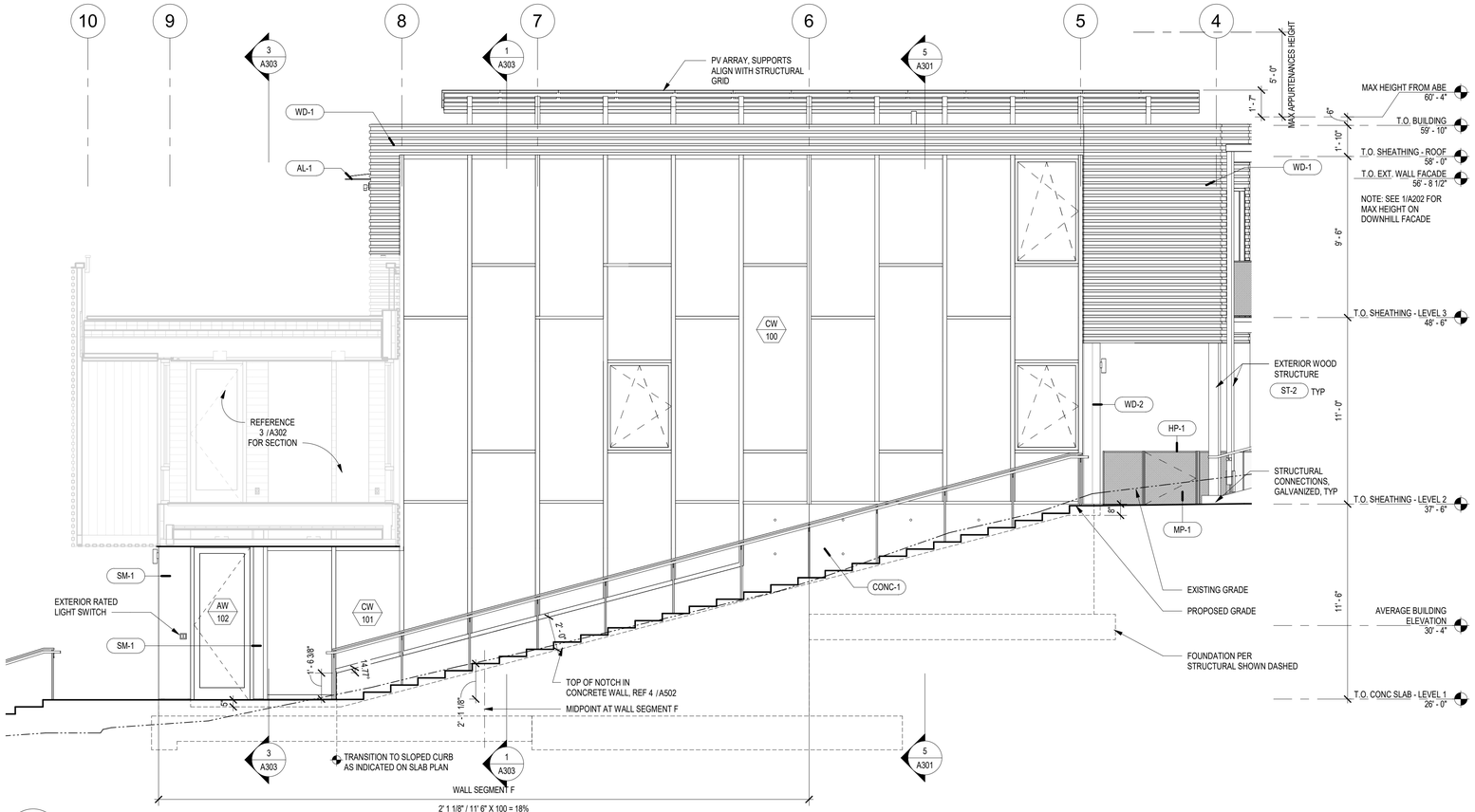

2 HILLCLIMB SOUTH ELEVATION / SECTION

A111 A202 — 1/4" = 1'-0"

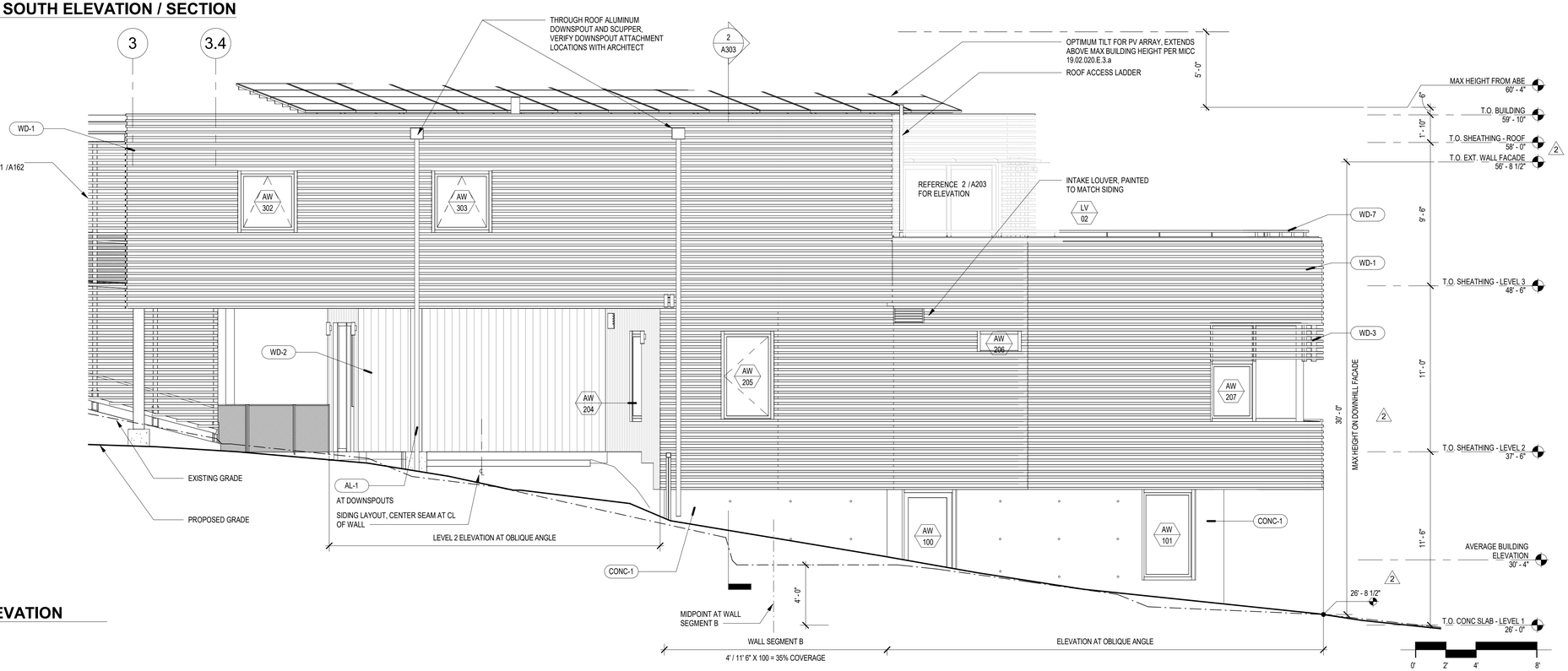

1 SOUTH ELEVATION

A121 A202 — 1/4" = 1'-0"

FINISH LEGEND

REPRESENTS FINISHES ON THIS SHEET ONLY, SEE A030 FOR MASTER FINISH LEGEND

AL-1	05 50 00 - POWDERCOATED ALUMINUM
CONC-1	03 30 00 - CIP ARCHITECTURAL CONCRETE, FORM TIE LOCATIONS TO BE COORDINATED IN SHOP DRAWINGS
HP-1	09 97 13 - HIGH PERFORMANCE COATING
MP-1	05 51 41 - PERFORATED METAL PANEL
SM-1	07 62 00 - SHEET METAL TRIM, REFERENCE DETAILS. FINISH TO MATCH ADJACENT MATERIAL
ST-2	09 93 13 - EXTERIOR WOOD FINISH
WD-1	07 46 23 - HORIZONTAL RIBBED KEBONY SIDING, REF DETAILS AND A030
WD-2	07 46 23 - VERTICAL T&G KEBONY SIDING, REF DETAILS AND A030
WD-3	07 36 23 - HORIZONTAL WOOD KEBONY SLATS OVER STEEL SUPPORTS. STEEL SUPPORTS TO BE PAINTED WITH HIGH PERFORMANCE PAINT, REF DETAILS AND A030
WD-7	06 40 00 - KEBONY HANDRAIL WITH HP-1 STEEL SUPPORTS

MILLER HULL

The Miller Hull Partnership, LLP
Architecture and Planning
Polson Building
71 Columbia, Sixth Floor
Seattle, WA 98104

Phone: 206.682.6837
Contact: Name

STAMP

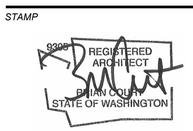

MERCER ISLAND HOUSE: CASCADE

6838 96TH AVE SE
MERCER ISLAND, WA 98040

SUBMITTAL

100% CONSTRUCTION DOCUMENTS

FEBRUARY 24, 2023

REVISIONS

No.	Description	Date
1	Building Permit Resubmittal	10/27/22
2	Building Permit Resubmittal 2	1/6/23

Drawn: AN
Checked: AN
M|H Proj No.: A20.0085.00

Issue Date: FEBRUARY 24, 2023

SHEET

BUILDING ELEVATIONS

A202

FINISH LEGEND

REPRESENTS FINISHES ON THIS SHEET ONLY, SEE A030 FOR MASTER FINISH LEGEND

AL-1	05 50 00 - POWDERCOATED ALUMINUM
FCP-1	07 46 46 - FIBER CEMENT SIDING
HP-1	09 97 13 - HIGH PERFORMANCE COATING
WD-1	07 46 23 - HORIZONTAL RIBBED KEBONY SIDING, REF DETAILS AND A030
WD-3	07 36 23 - HORIZONTAL WOOD KEBONY SLATS OVER STEEL SUPPORTS. STEEL SUPPORTS TO BE PAINTED WITH HIGH PERFORMANCE PAINT, REF DETAILS AND A030
WD-7	06 40 00 - KEBONY HANDRAIL WITH HP-1 STEEL SUPPORTS
WD-9	06 40 00 - INTERIOR STAIR WOOD HANDRAIL

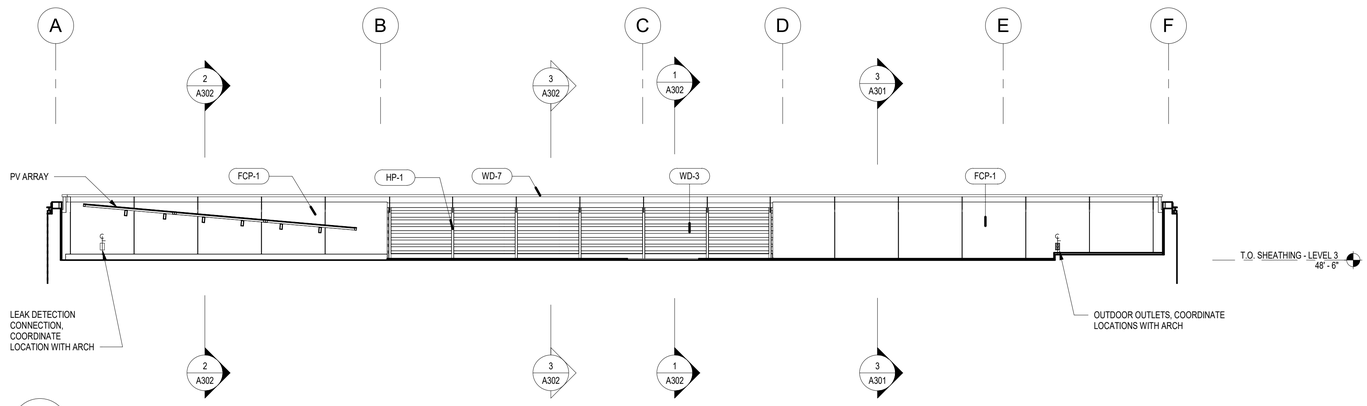

3 A131 A203 PARTIAL ELEVATION - ROOF DECK EAST

1/4" = 1'-0"

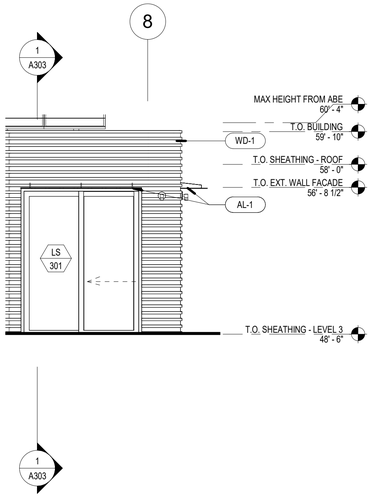

2 A131 A203 PARTIAL ELEVATION - ROOF DECK SOUTH

1/4" = 1'-0"

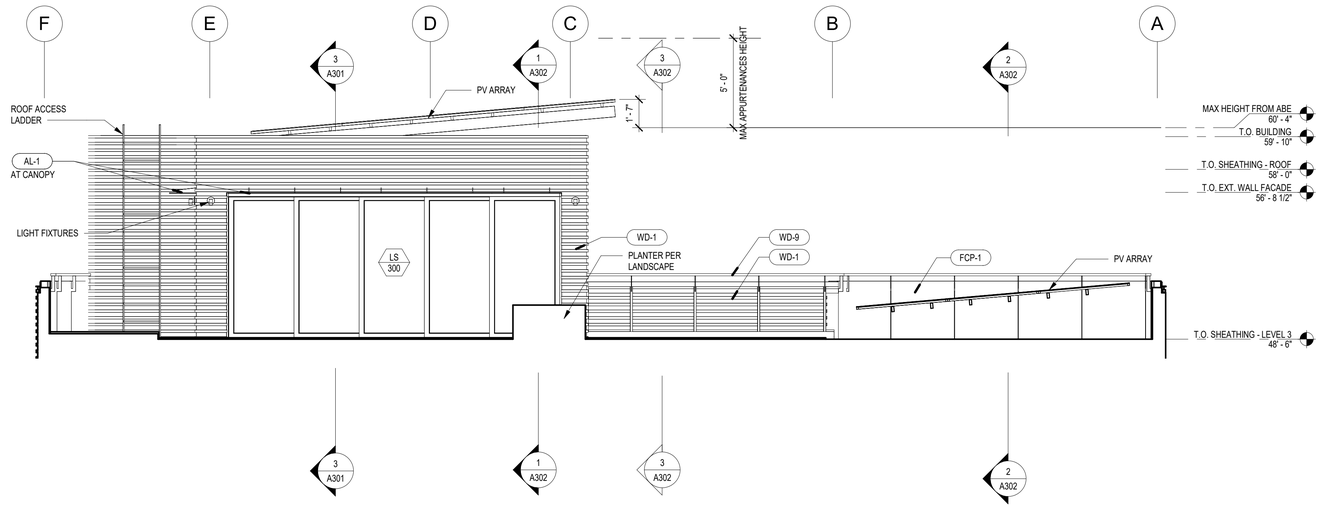

1 A131 A203 PARTIAL ELEVATION - ROOF DECK WEST

1/4" = 1'-0"

0' 2' 4' 8'

MILLER HULL

The Miller Hull Partnership, LLP
Architecture and Planning
Polson Building
71 Columbia, Sixth Floor
Seattle, WA 98104

Phone: 206.682.6837
Contact: Name

STAMP

MERCER ISLAND HOUSE: CASCADE

6838 96TH AVE SE
MERCER ISLAND, WA 98040

SUBMITTAL

100% CONSTRUCTION DOCUMENTS

FEBRUARY 24, 2023

REVISIONS

No.	Description	Date

Drawn: AN
Checked: AN
M|H Proj No.: A20.0085.00

Issue Date: FEBRUARY 24, 2023

SHEET

BUILDING ELEVATIONS

A203

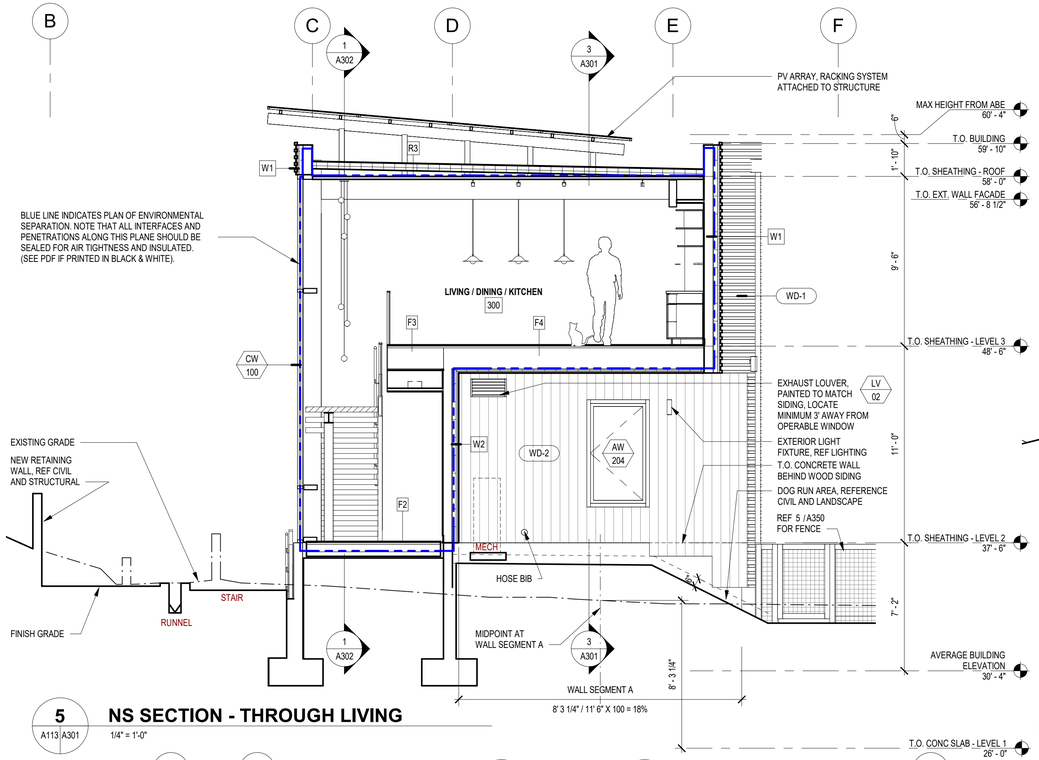

5 A113 A301 **NS SECTION - THROUGH LIVING**
1/4" = 1'-0"

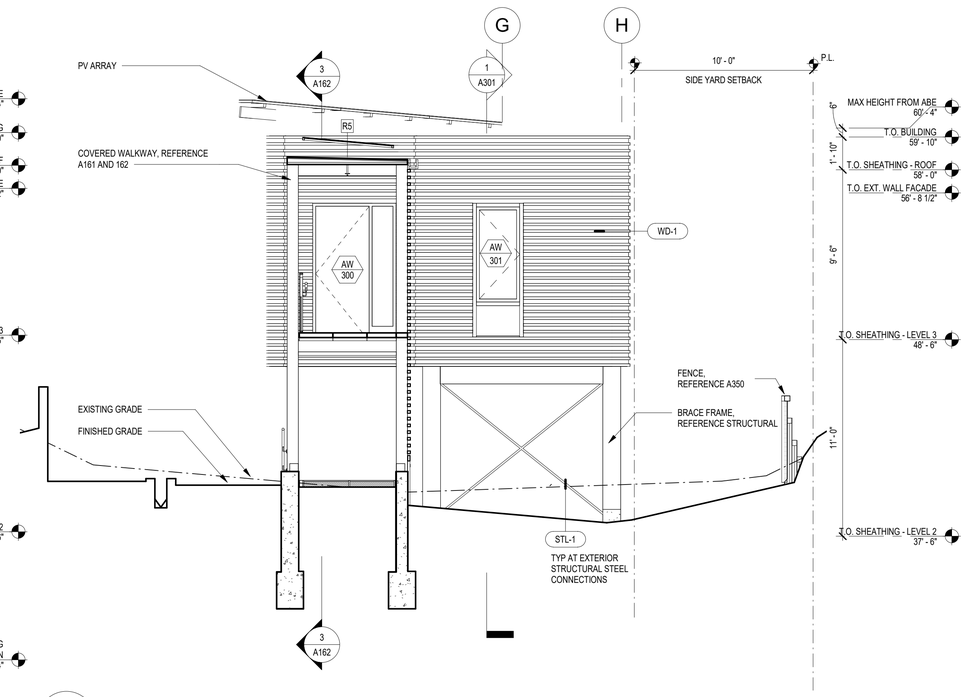

4 A121 A301 **WEST ELEVATION @ ENTRY**
1/4" = 1'-0"

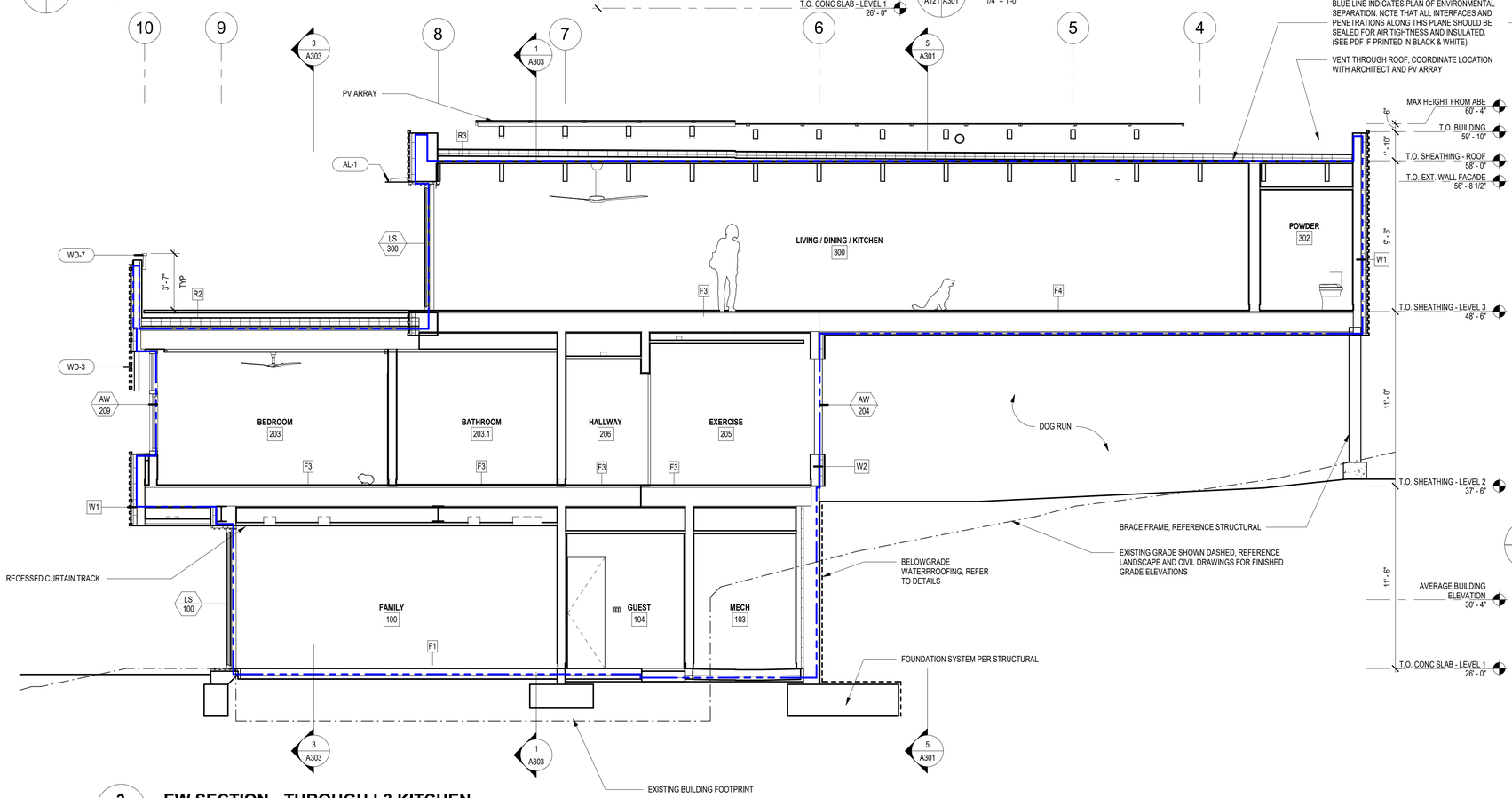

3 A111 A301 **EW SECTION - THROUGH L3 KITCHEN**
1/4" = 1'-0"

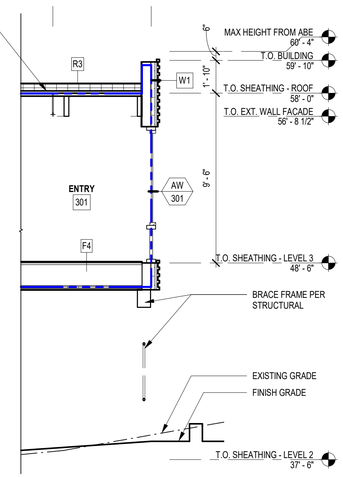

1 A301 **EW PARTIAL SECTION - GL 3**
1/4" = 1'-0"

FINISH LEGEND

REPRESENTS FINISHES ON THIS SHEET ONLY, SEE A030 FOR MASTER FINISH LEGEND

AL-1	05 50 00 - POWDERCOATED ALUMINUM
STL-1	05 00 00 - GALVANIZED STEEL
WD-1	07 46 23 - HORIZONTAL RIBBED KEBONY SIDING, REF DETAILS AND A030
WD-2	07 46 23 - VERTICAL T&G KEBONY SIDING, REF DETAILS AND A030
WD-3	07 36 23 - HORIZONTAL WOOD KEBONY SLATS OVER STEEL SUPPORTS. STEEL SUPPORTS TO BE PAINTED WITH HIGH PERFORMANCE PAINT, REF DETAILS AND A030
WD-7	06 40 00 - KEBONY HANDRAIL WITH HP-1 STEEL SUPPORTS

0' 2' 4' 8'

MILLER HULL
The Miller Hull Partnership, LLP
Architecture and Planning
Polson Building
71 Columbia, Sixth Floor
Seattle, WA 98104
Phone: 206.682.6837
Contact: Name

STAMP

REGISTERED ARCHITECT
BRIAN COLEY
STATE OF WASHINGTON

REVIEWED FOR CODE COMPLIANCE
March 27, 2023
SITE COPY

MERCER ISLAND HOUSE: CASCADE

6838 96TH AVE SE
MERCER ISLAND, WA 98040

SUBMITTAL

100% CONSTRUCTION DOCUMENTS

FEBRUARY 24, 2023

REVISIONS

No.	Description	Date

Drawn: AN
Checked: AN
M|H Proj No.: A20.0085.00
Issue Date: FEBRUARY 24, 2023

SHEET

BUILDING ELEVATIONS / SECTIONS

A301

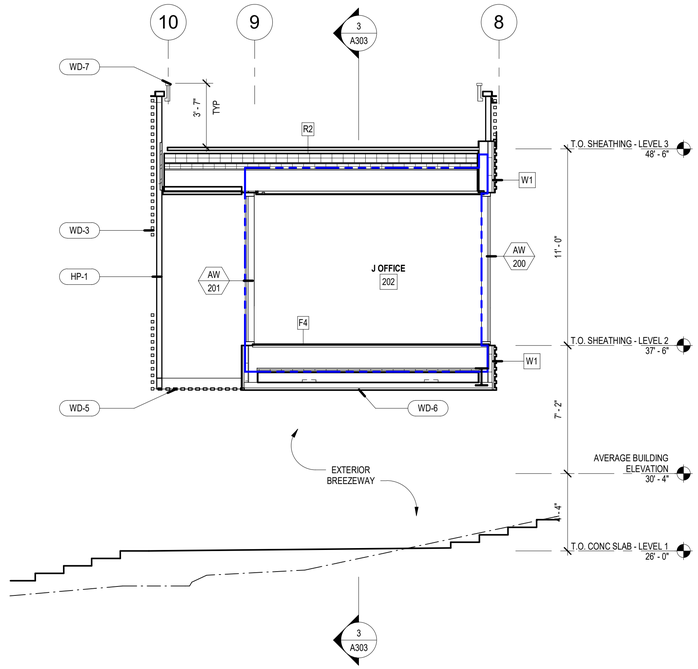

3 A111 A302 EW SECTION - THROUGH J OFFICE

1/4" = 1'-0"

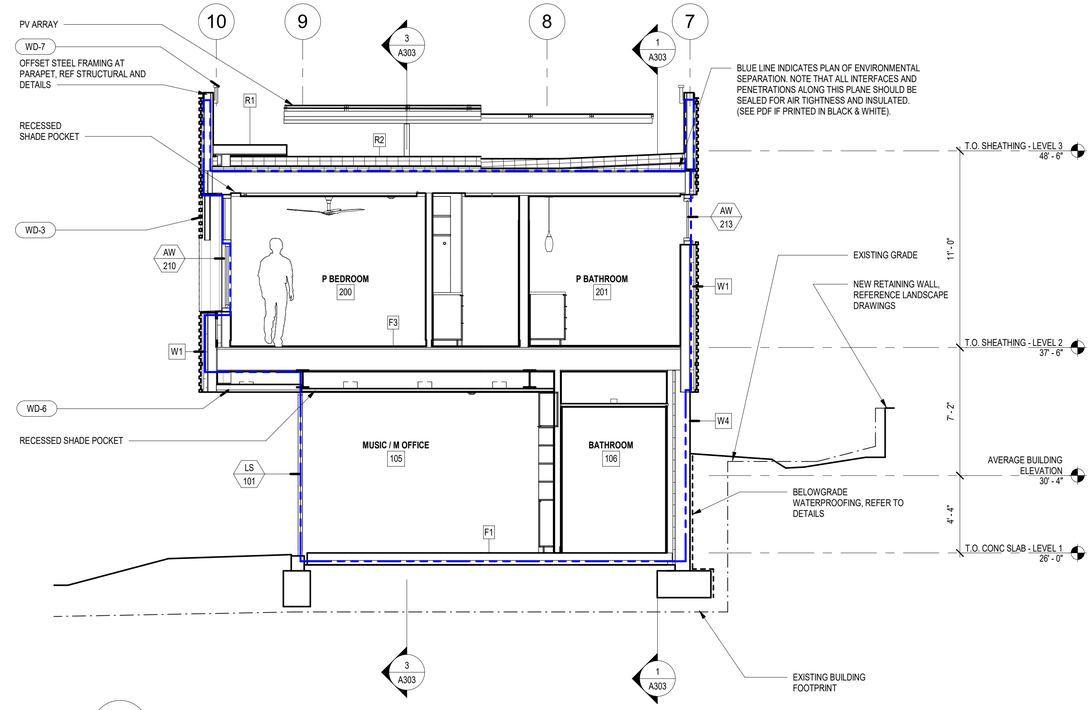

2 A111 A302 EW SECTION - THROUGH M OFFICE

1/4" = 1'-0"

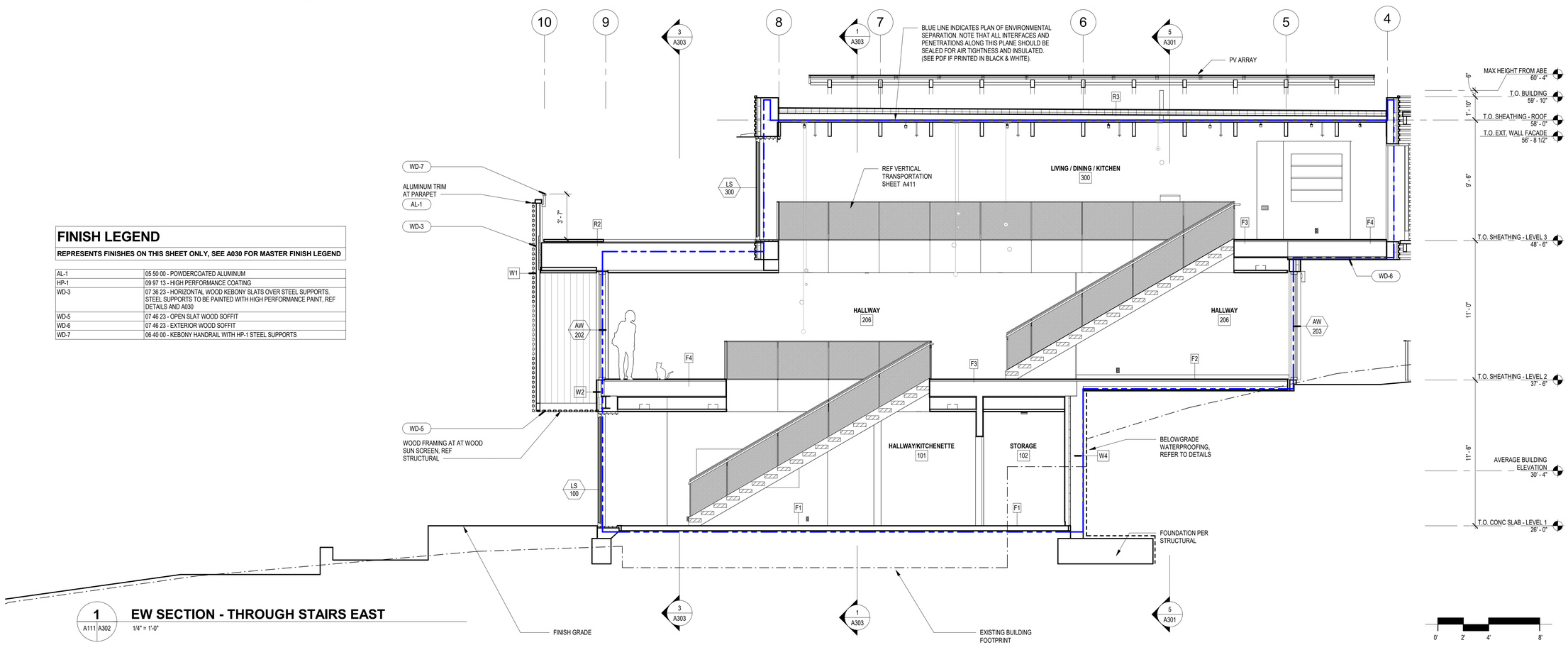

1 A111 A302 EW SECTION - THROUGH STAIRS EAST

1/4" = 1'-0"

FINISH LEGEND

REPRESENTS FINISHES ON THIS SHEET ONLY, SEE A030 FOR MASTER FINISH LEGEND

AL-1	05 50 00 - POWDERCOATED ALUMINUM
HP-1	09 97 13 - HIGH PERFORMANCE COATING
WD-3	07 36 23 - HORIZONTAL WOOD KEBONY SLATS OVER STEEL SUPPORTS. STEEL SUPPORTS TO BE PAINTED WITH HIGH PERFORMANCE PAINT, REF DETAILS AND A030
WD-5	07 46 23 - OPEN SLAT WOOD SOFFIT
WD-6	07 46 23 - EXTERIOR WOOD SOFFIT
WD-7	06 40 00 - KEBONY HANDRAIL WITH HP-1 STEEL SUPPORTS

MILLER HULL

The Miller Hull Partnership, LLP
Architecture and Planning
Polson Building
71 Columbia, Sixth Floor
Seattle, WA 98104

Phone: 206.682.6837
Contact: Name

STAMP

9309 REGISTERED ARCHITECT BRIAN COLLIN STATE OF WASHINGTON

MERCER ISLAND REVIEWED FOR CODE COMPLIANCE March 27, 2023 SITE COPY

MERCER ISLAND HOUSE: CASCADE

6838 96TH AVE SE
MERCER ISLAND, WA 98040

SUBMITTAL

100% CONSTRUCTION DOCUMENTS

FEBRUARY 24, 2023

REVISIONS

No.	Description	Date

Drawn: AN
Checked: AN
M|H Proj No.: A20.0085.00

Issue Date: FEBRUARY 24, 2023

SHEET

BUILDING SECTIONS
A302

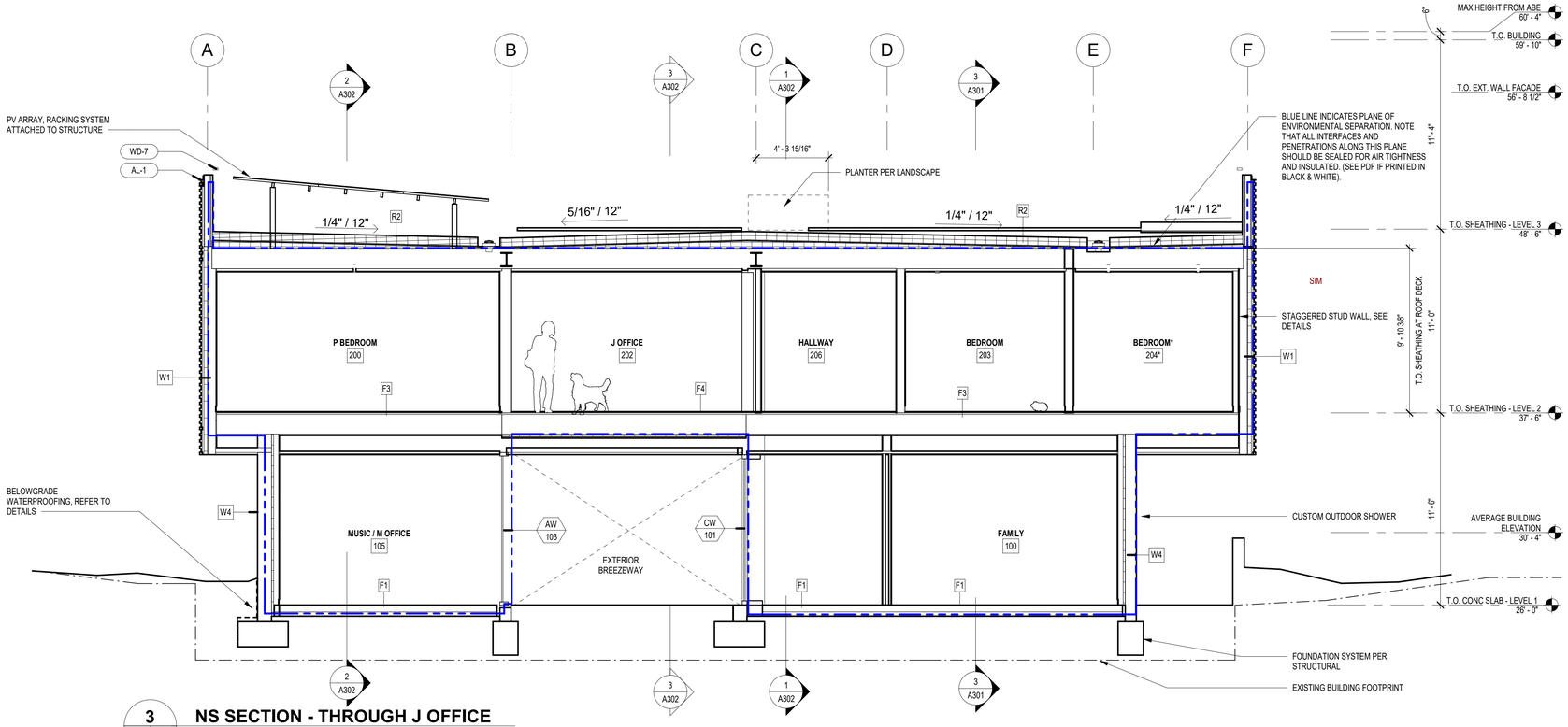

3 NS SECTION - THROUGH J OFFICE

A111 | A303

1/4" = 1'-0"

FINISH LEGEND

REPRESENTS FINISHES ON THIS SHEET ONLY, SEE A030 FOR MASTER FINISH LEGEND

AL-1	05 50 00 - POWDERCOATED ALUMINUM
WD-6	07 46 23 - EXTERIOR WOOD SOFFIT
WD-7	06 40 00 - KEBONY HANDRAIL WITH HP-1 STEEL SUPPORTS
WD-9	06 40 00 - INTERIOR STAIR WOOD HANDRAIL

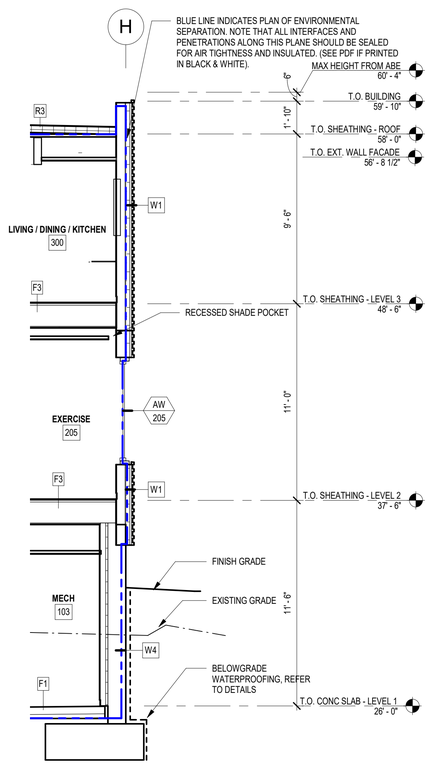

2 NS SECTION @ GL H

A111 | A303

1/4" = 1'-0"

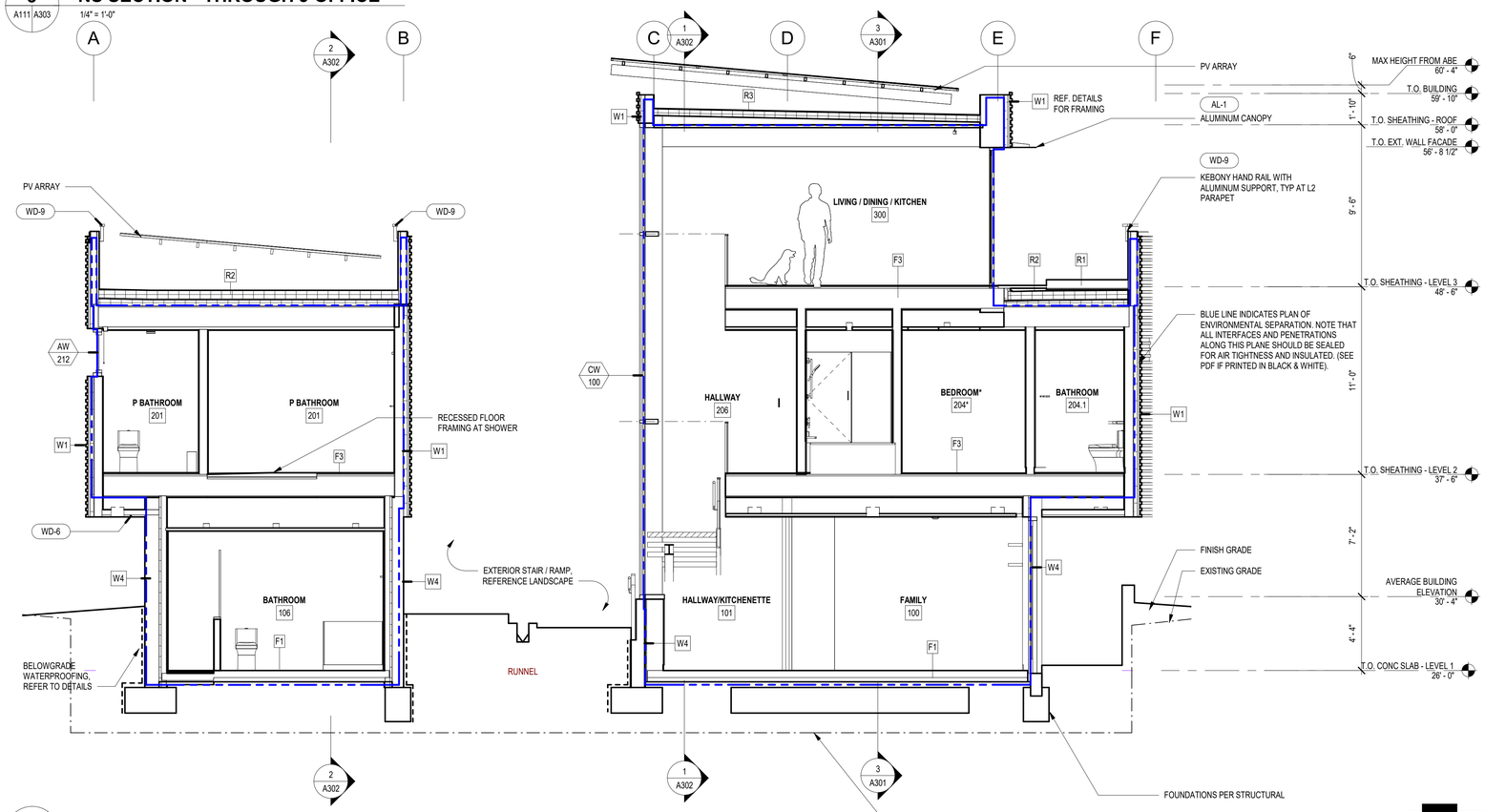

1 NS SECTION - THROUGH BREEZEWAY

A111 | A303

1/4" = 1'-0"

MILLER HULL

The Miller Hull Partnership, LLP
Architecture and Planning
Polson Building
71 Columbia, Sixth Floor
Seattle, WA 98104

Phone: 206.682.6837
Contact: Name

STAMP

9309 REGISTERED ARCHITECT BRIAN COLLIN STATE OF WASHINGTON

REVIEWED FOR CODE COMPLIANCE March 27, 2023 SITE COPY

MERCER ISLAND HOUSE: CASCADE

6838 96TH AVE SE
MERCER ISLAND, WA 98040

SUBMITTAL

100% CONSTRUCTION DOCUMENTS

FEBRUARY 24, 2023

REVISIONS

No.	Description	Date

Drawn: AN
Checked: AN
M|H Proj No.: A20.0085.00

Issue Date: FEBRUARY 24, 2023

SHEET

BUILDING SECTIONS

A303

FINISH LEGEND

REPRESENTS FINISHES ON THIS SHEET ONLY, SEE A030 FOR MASTER FINISH LEGEND

HP-1	09 97 13 - HIGH PERFORMANCE COATING
MP-1	05 51 41 - PERFORATED METAL PANEL
WD-4	07 36 23 - HORIZONTAL WOOD KEBONY SLATS OVER WOOD SUPPORTS, REF DETAILS AND A030
WWM-2	05 50 00 - WELDED WIRE MESH, GALVANIZED

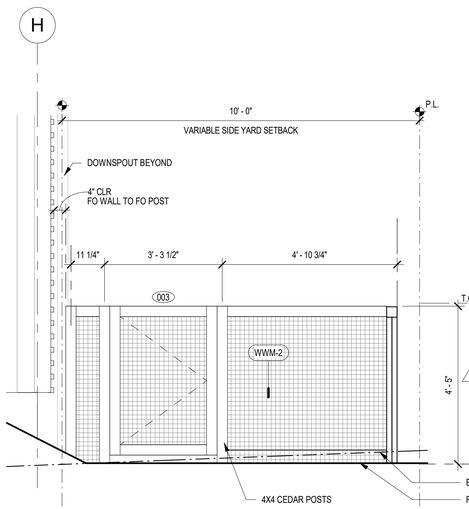

5 G101 A350 **FENCE AT DOG RUN - EAST**
1/2" = 1'-0"

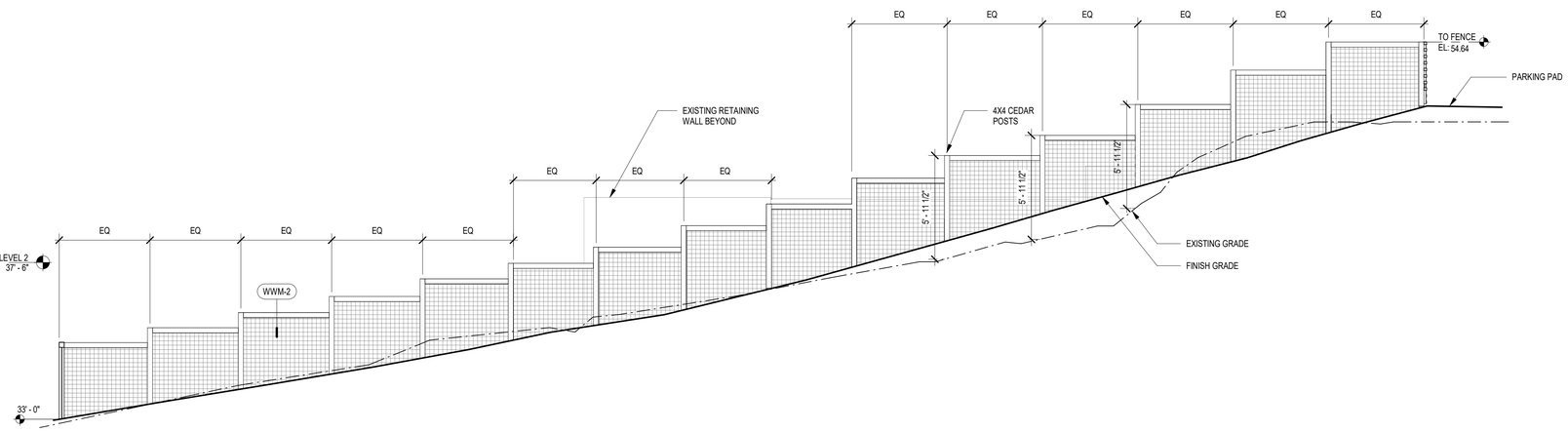

4 G101 A350 **FENCE AT DOG RUN - SOUTH**
1/4" = 1'-0"

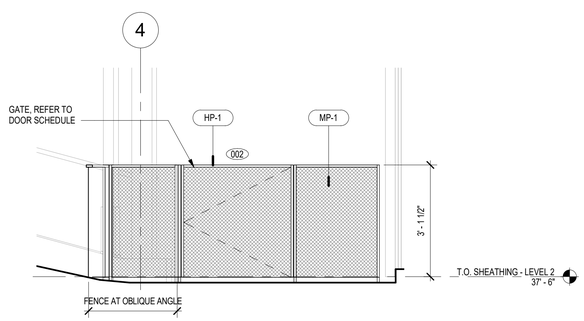

3 G101 A350 **FENCE AT DOG RUN - NORTH**
1/2" = 1'-0"

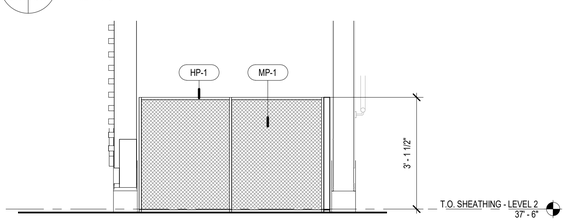

2 G101 A350 **FENCE AT DOG RUN - WEST**
1/2" = 1'-0"

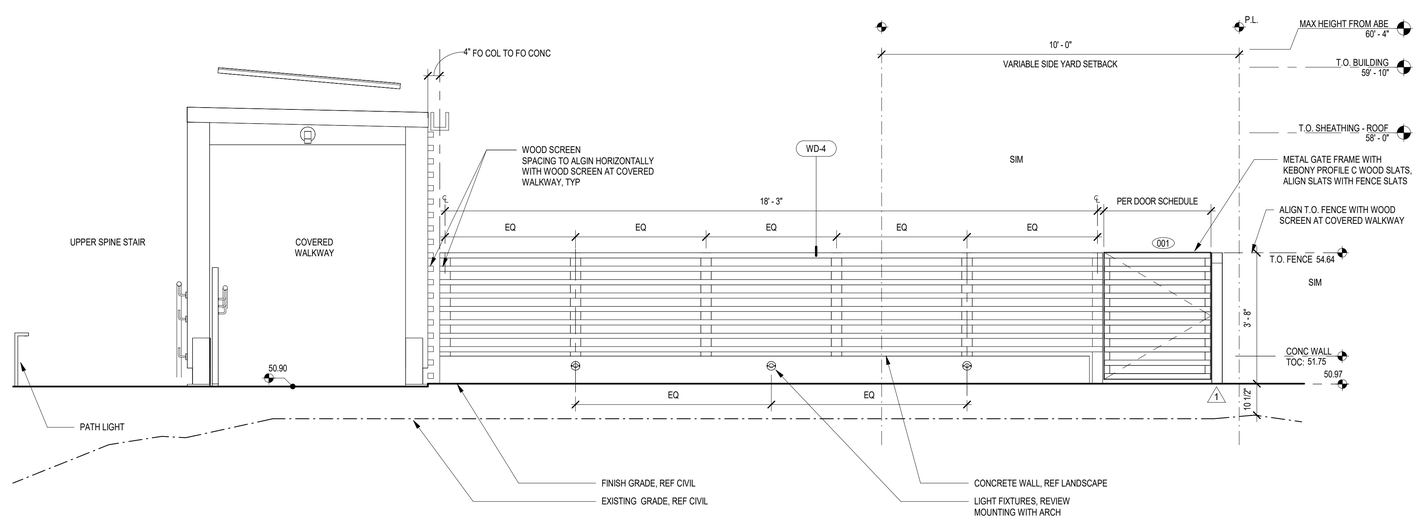

1 G101 A350 **FENCE AT PARKING PAD / DOG RUN - WEST**
1/2" = 1'-0"

MILLER HULL

The Miller Hull Partnership, LLP
Architecture and Planning
Polson Building
71 Columbia, Sixth Floor
Seattle, WA 98104

Phone: 206.682.6837
Contact: Name

STAMP

MERCER ISLAND HOUSE: CASCADE

6838 96TH AVE SE
MERCER ISLAND, WA 98040

SUBMITTAL

100% CONSTRUCTION DOCUMENTS

FEBRUARY 24, 2023

REVISIONS

No.	Description	Date
1	Building Permit Resubmittal	10/27/22

Drawn: KR
Checked: AN
M|H Proj No.: A20.0085.00

Issue Date: FEBRUARY 24, 2023

SHEET

FENCE ELEVATIONS
A350

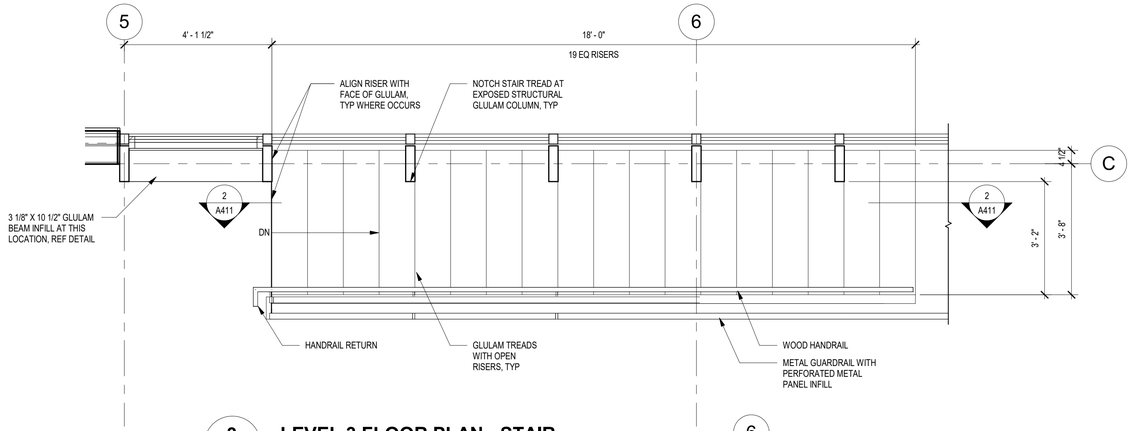

3 A131 A410 **LEVEL 3 FLOOR PLAN - STAIR**

1/2" = 1'-0"

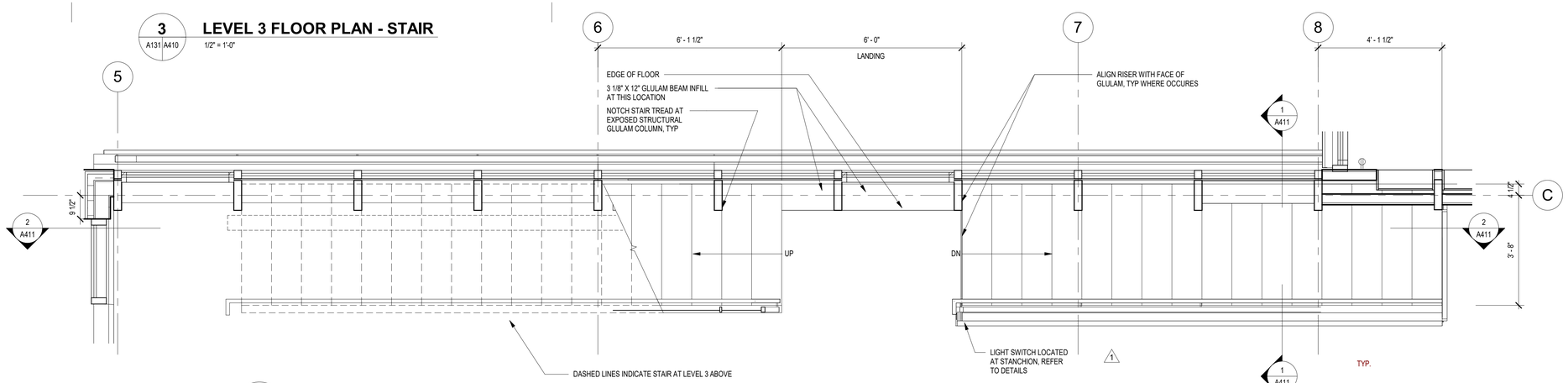

2 A121 A410 **LEVEL 2 FLOOR PLAN - STAIR**

1/2" = 1'-0"

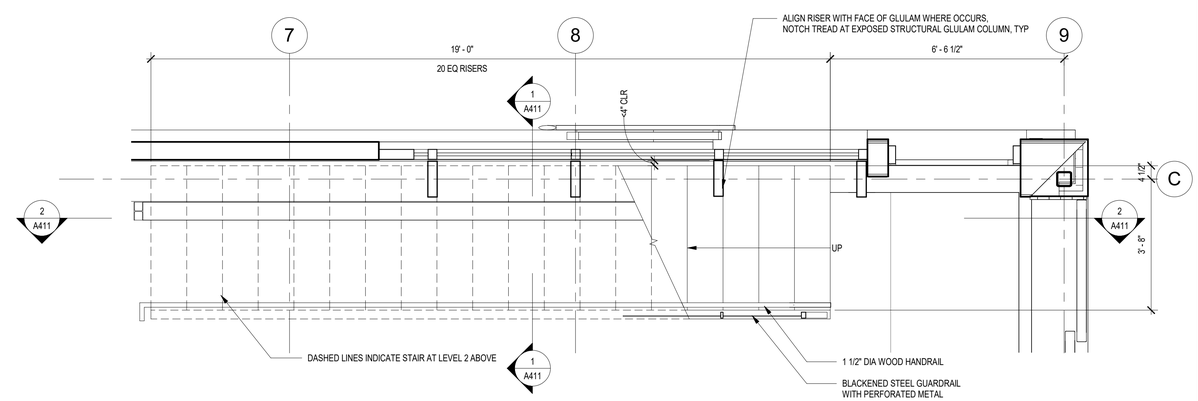

1 A111 A410 **LEVEL 1 FLOOR PLAN - STAIR**

1/2" = 1'-0"

0' 1' 2' 4'

MILLER HULL

The Miller Hull Partnership, LLP
Architecture and Planning
Polson Building
71 Columbia, Sixth Floor
Seattle, WA 98104

Phone: 206.682.6837
Contact: Name

STAMP

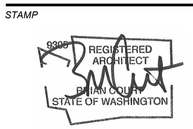

MERCER ISLAND HOUSE: CASCADE

6838 96TH AVE SE
MERCER ISLAND, WA 98040

SUBMITTAL

100% CONSTRUCTION DOCUMENTS

FEBRUARY 24, 2023

REVISIONS

No.	Description	Date
1	Building Permit Resubmittal	10/27/22

Drawn: KR
Checked: AN
M|H Proj No.: A20.0085.00

Issue Date: FEBRUARY 24, 2023

SHEET

VERTICAL TRANSPORTATION

A410

FINISH LEGEND

REPRESENTS FINISHES ON THIS SHEET ONLY, SEE A030 FOR MASTER FINISH LEGEND

MP-1	05 51 41 - PERFORATED METAL PANEL
ST-4	09 93 13 - INTERIOR WOOD FINISH - WALKING SURFACE
STL-2	05 05 14 - BLACKENED STEEL
WD-9	06 40 00 - INTERIOR STAIR WOOD HANDRAIL
WD-12	06 15 00 - INTERIOR STAIR TREAD

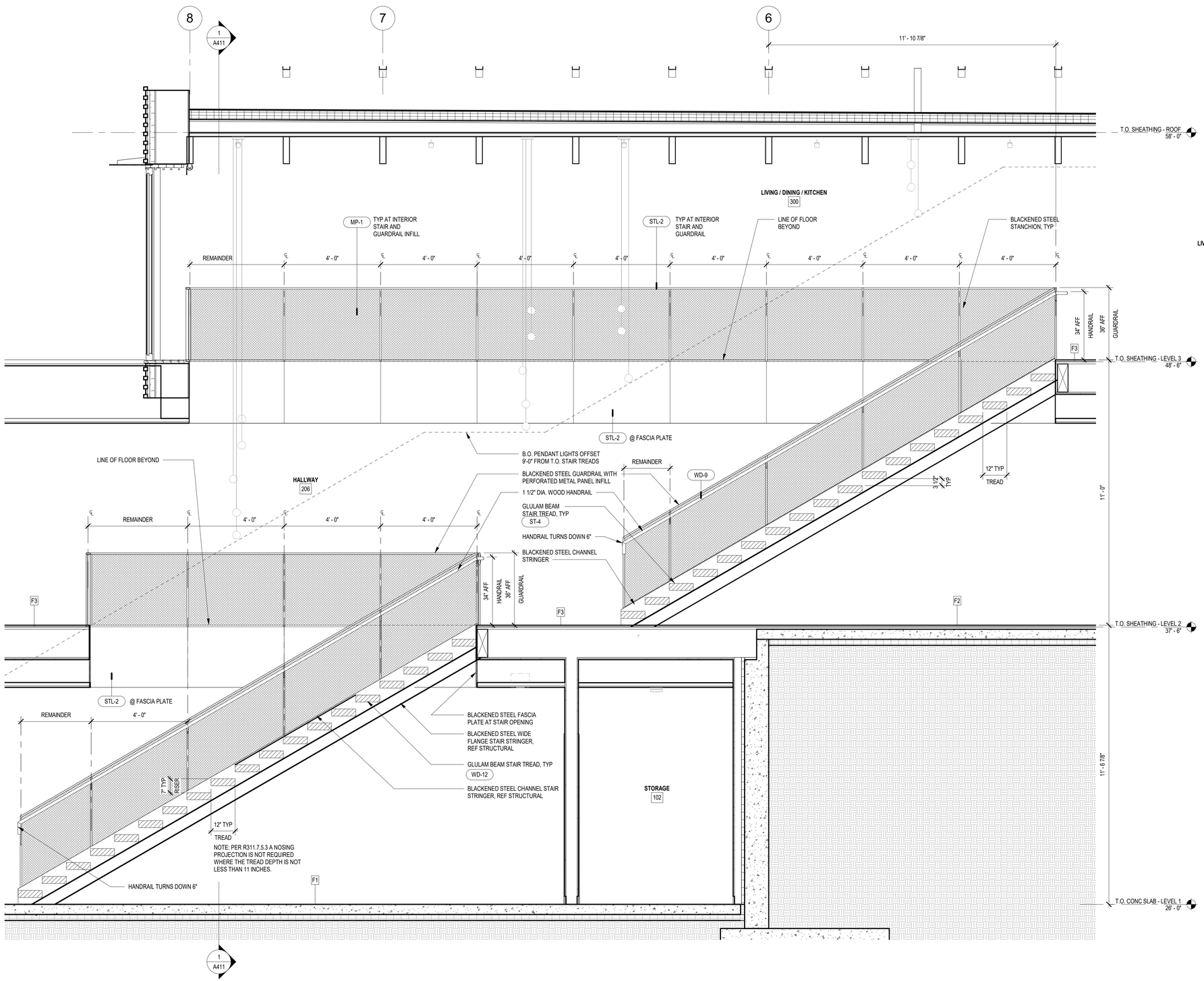

2 A410 | A411 **EW SECTION - STAIR 2**
1/2" = 1'-0"

1 A410 | A411 **NS SECTION - STAIR**
1/2" = 1'-0"

0' 1' 2' 4'

MILLER HULL

The Miller Hull Partnership, LLP
Architecture and Planning
Polson Building
71 Columbia, Sixth Floor
Seattle, WA 98104

Phone: 206.682.6837
Contact: Name

STAMP

9309 REGISTERED ARCHITECT BRIAN COLLIN STATE OF WASHINGTON

MERCER ISLAND REVIEWED FOR CODE COMPLIANCE March 27, 2023 SITE COPY

MERCER ISLAND HOUSE: CASCADE

6838 96TH AVE SE
MERCER ISLAND, WA 98040

SUBMITTAL

100% CONSTRUCTION DOCUMENTS

FEBRUARY 24, 2023

REVISIONS

No.	Description	Date

Drawn: KR
Checked: AN
M|H Proj No.: A20.0085.00

Issue Date: FEBRUARY 24, 2023

SHEET

VERTICAL TRANSPORTATION

A411

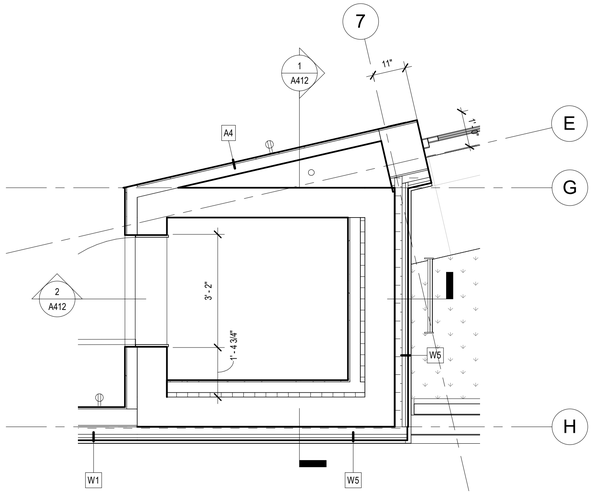

5 A131 A412 **ELEVATOR ENL PLAN - LEVEL 3**
1/2" = 1'-0"

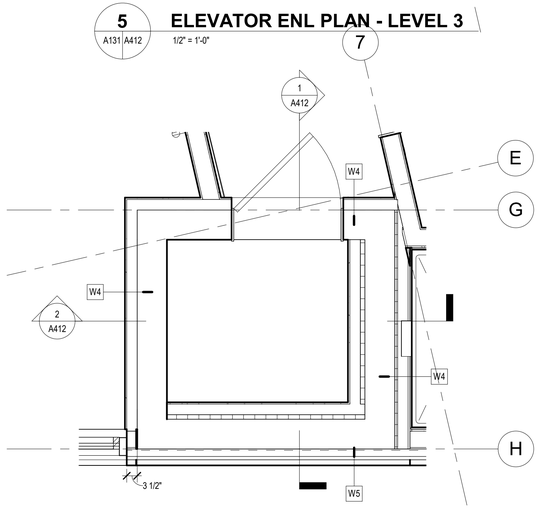

4 A121 A412 **ELEVATOR ENL PLAN - LEVEL 2**
1/2" = 1'-0"

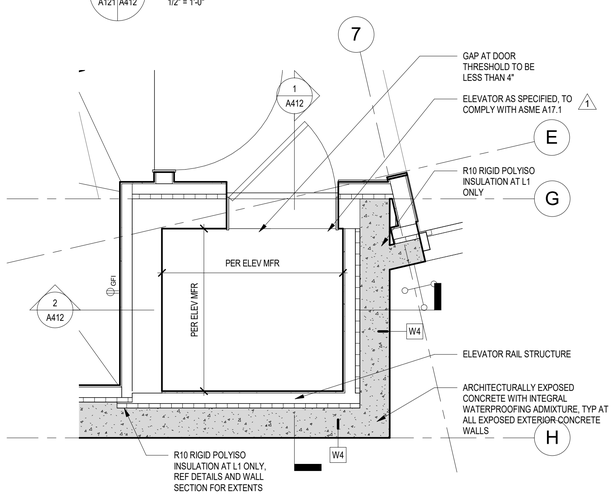

3 A111 A412 **ELEVATOR ENL PLAN - LEVEL 1**
1/2" = 1'-0"

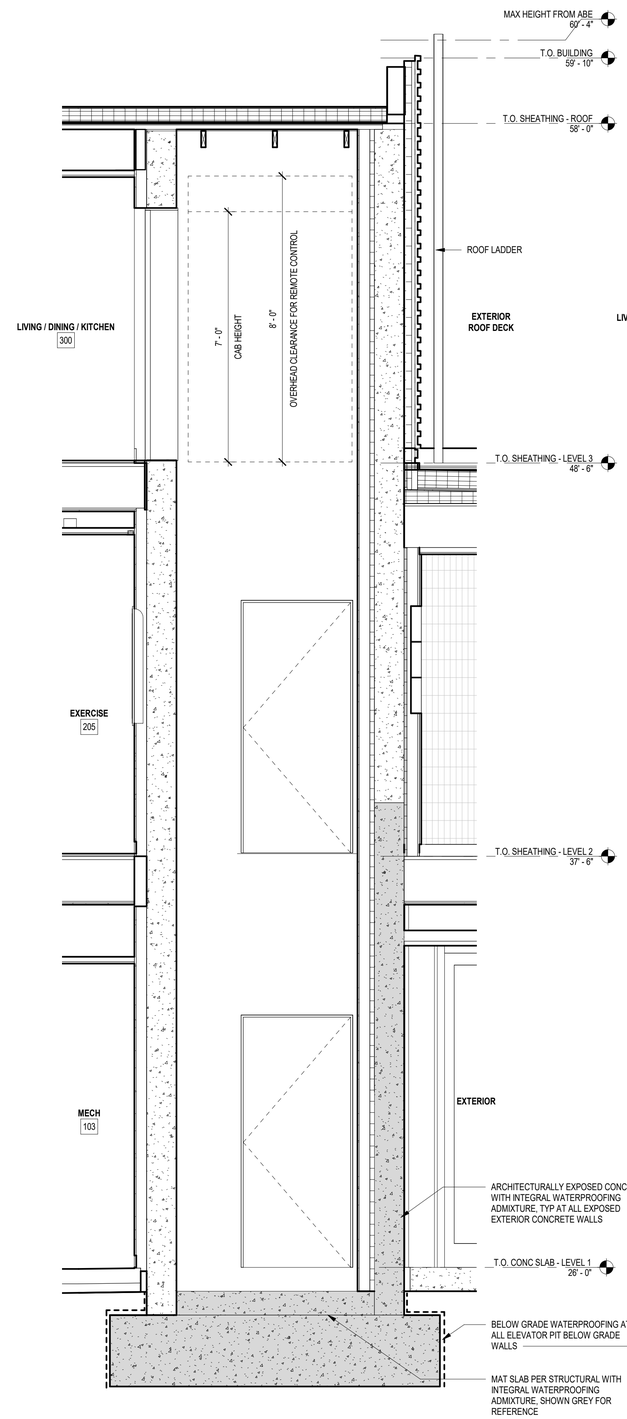

2 A412 A412 **EW SECTION - ELEVATOR**
1/2" = 1'-0"

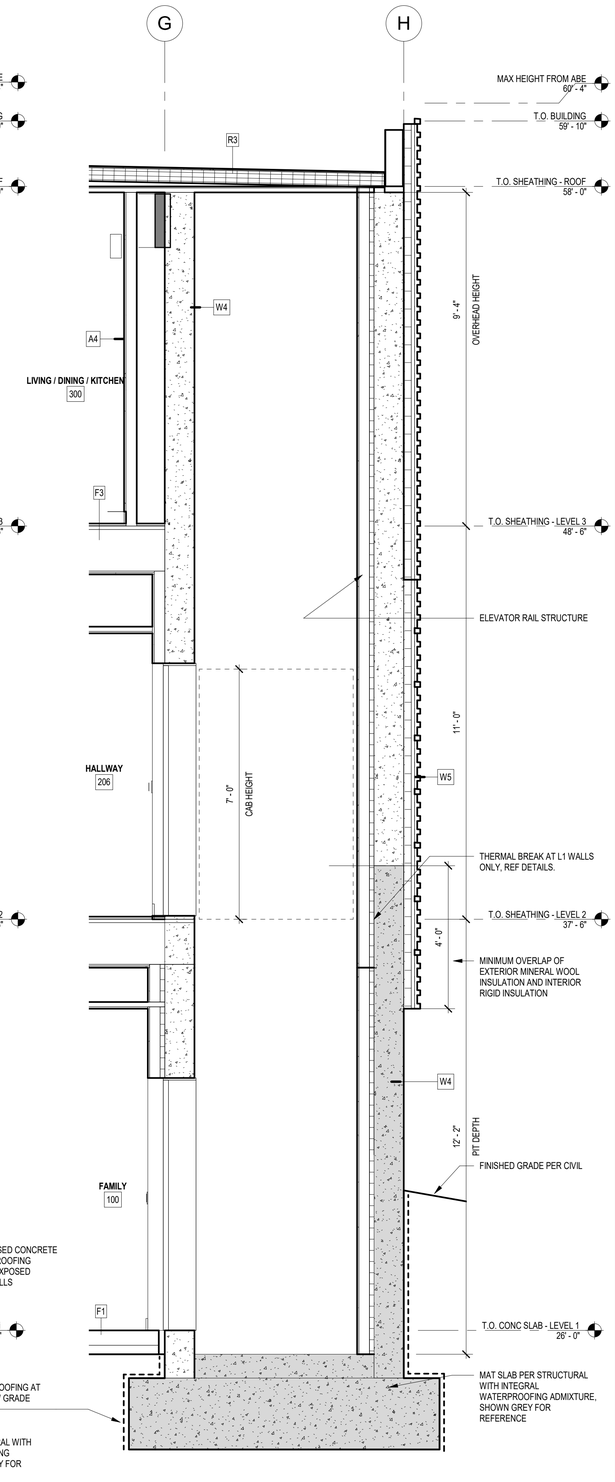

1 A412 A412 **NS SECTION - ELEVATOR**
1/2" = 1'-0"

0' 1' 2' 4'

MILLER HULL

The Miller Hull Partnership, LLP
Architecture and Planning
Polson Building
71 Columbia, Sixth Floor
Seattle, WA 98104

Phone: 206.682.6837
Contact: Name

STAMP

9309 REGISTERED ARCHITECT BRIAN COLLIN STATE OF WASHINGTON

REVIEWED FOR CODE COMPLIANCE
March 27, 2023
SITE COPY

MERCER ISLAND HOUSE: CASCADE

6838 96TH AVE SE
MERCER ISLAND, WA 98040

SUBMITTAL

100% CONSTRUCTION DOCUMENTS

FEBRUARY 24, 2023

REVISIONS

No.	Description	Date
1	Building Permit Resubmittal	10/27/22

Drawn: AN
Checked: AN
M|H Proj No.: A20.0085.00

Issue Date: FEBRUARY 24, 2023

SHEET

VERTICAL TRANSPORTATION

A412

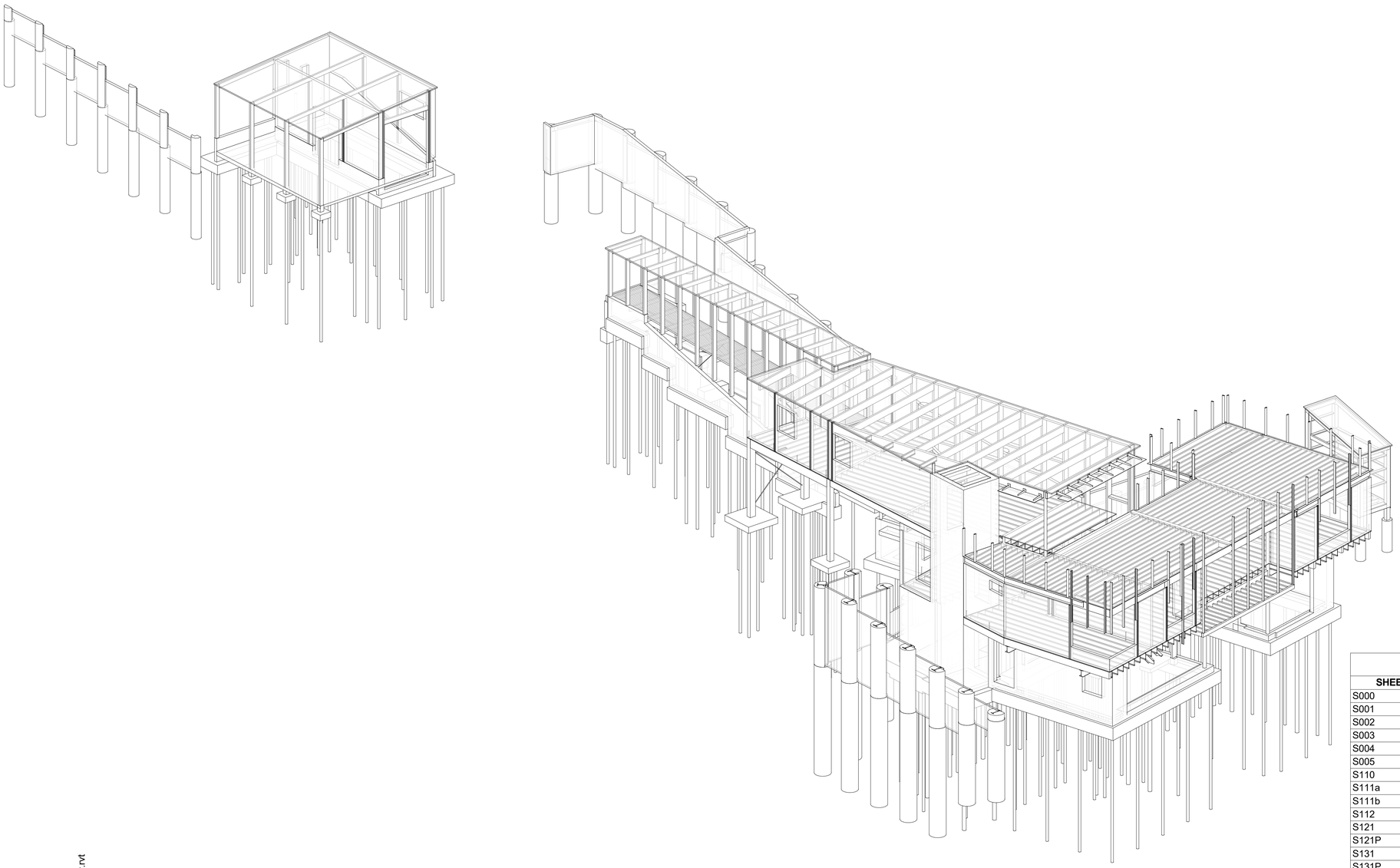

STRUCTURAL DRAWING INDEX	
SHEET NUMBER	**SHEET DESCRIPTION**
S000	COVER SHEET
S001	GENERAL NOTES
S002	GENERAL NOTES
S003	GENERAL NOTES
S004	GENERAL NOTES
S005	GENERAL NOTES
S110	PLAN NOTES
S111a	PILE PLAN
S111b	PILE PLAN
S112	LEVEL 1 - FOUNDATION PLAN
S121	LEVEL 2 - FLOOR FRAMING PLAN
S121P	LEVEL 2 - FLOOR FRAMING PENETRATION PLAN
S131	LEVEL 3 - FLOOR FRAMING PLAN
S131P	LEVEL 3 - FLOOR FRAMING PENETRATION PLAN
S141	ROOF - FRAMING PLAN
S151	GARAGE AND SHED PLANS
S161	COVERED WALKWAY PLANS
S301	SLAB-ON-GRADE DETAILS
S302	FOUNDATION DETAILS
S303	FOUNDATION DETAILS
S304	FOUNDATION DETAILS
S305	FOUNDATION DETAILS
S400	SOLDIER PILE WALL PLAN
S401	SHORING WALL ELEVATIONS
S402	SHORING WALL ELEVATIONS
S403	SHORING DETAILS
S410	TEMPORARY SHORING WALL PLANS & ELEVATIONS
S411	TEMPORARY SHORING WALL DETAILS
S501	STEEL FRAMING DETAILS
S701	WOOD FRAMING DETAILS
S702	WOOD FRAMING DETAILS
S703	WOOD FRAMING DETAILS
S704	WOOD FRAMING DETAILS
S705	WOOD FRAMING DETAILS
S706	WOOD FRAMING DETAILS
S707	WOOD FRAMING DETAILS
S708	WOOD FRAMING DETAILS
S709	WOOD FRAMING DETAILS
S710	WOOD FRAMING DETAILS
Grand total: 39	

C:_Revit Models\21201 Mercer Island Residence R2022 (Central)_DEHollar.rvt

MILLER HULL

The Miller Hull Partnership, LLP
Architecture and Planning
Polson Building
71 Columbia, Sixth Floor
Seattle, WA 98104

Phone: 206.682.6837
Contact: Name

PCS Structural Solutions
Seattle | Tacoma | Portland
www.pcs-structural.com

STAMP

MERCER ISLAND HOUSE: CASCADE

6838 96TH AVE SE
MERCER ISLAND, WA 98040

SUBMITTAL

100% CONSTRUCTION DOCUMENTS

February 24, 2023

REVISIONS

No.	Description	Date

Drawn: DEH
Checked: TJR
M|H Proj No.: A20.0085.00

Issue Date: February 24, 2023

SHEET

COVER SHEET
S000

GENERAL NOTES

THESE GENERAL NOTES ARE TO BE USED AS A SUPPLEMENT TO THE SPECIFICATIONS. ANY DISCREPANCIES FOUND AMONG THE DRAWINGS, THE SPECIFICATIONS, THESE GENERAL NOTES AND THE SITE CONDITIONS SHALL BE REPORTED TO THE ARCHITECT, WHO SHALL CORRECT SUCH DISCREPANCY IN WRITING. ANY WORK DONE BY THE GENERAL CONTRACTOR AFTER DISCOVERY OF SUCH DISCREPANCY SHALL BE DONE AT THE GENERAL CONTRACTOR'S RISK. THE GENERAL CONTRACTOR SHALL VERIFY AND COORDINATE DIMENSIONS AMONG ALL DRAWINGS PRIOR TO PROCEEDING WITH ANY WORK OR FABRICATION. THE STRUCTURE HAS BEEN DESIGNED TO RESIST CODE SPECIFIED VERTICAL AND LATERAL FORCES AFTER THE CONSTRUCTION OF ALL STRUCTURAL ELEMENTS HAS BEEN COMPLETED. STABILITY OF THE STRUCTURE PRIOR TO COMPLETION IS THE SOLE RESPONSIBILITY OF THE GENERAL CONTRACTOR. THIS RESPONSIBILITY INCLUDES BUT IS NOT LIMITED TO JOB SITE SAFETY; ERECTION MEANS, METHODS, AND SEQUENCES; TEMPORARY SHORING, FORMWORK, BRACING; USE OF EQUIPMENT AND CONSTRUCTION PROCEDURES. PROVIDE ADEQUATE RESISTANCE TO LOADS ON THE STRUCTURES DURING CONSTRUCTION PER SEI/ASCE STANDARD NO. 37-14 "DESIGN LOADS ON STRUCTURES DURING CONSTRUCTION."

CONSTRUCTION OBSERVATION BY THE STRUCTURAL ENGINEER IS FOR GENERAL CONFORMANCE WITH DESIGN ASPECTS ONLY AND IS NOT INTENDED IN ANY WAY TO REVIEW THE CONTRACTOR'S CONSTRUCTION PROCEDURES.

STANDARDS
ALL METHODS, MATERIALS AND WORKMANSHIP SHALL CONFORM TO THE 2018 INTERNATIONAL BUILDING CODE (IBC) AS AMENDED AND ADOPTED BY THE LOCAL BUILDING OFFICIAL OR APPLICABLE JURISDICTION.

CONTRACT DRAWINGS / DIMENSIONS

ARCHITECTURAL DRAWINGS ARE THE PRIME CONTRACT DRAWINGS. CONSULTANT DRAWINGS BY OTHER DISCIPLINES ARE SUPPLEMENTARY TO ARCHITECTURAL DRAWINGS. REPORT DIMENSIONAL OMISSIONS OR DISCREPANCIES BETWEEN ARCHITECTURAL DRAWINGS AND STRUCTURAL, MECHANICAL, ELECTRICAL OR CIVIL DRAWINGS TO ARCHITECT PRIOR TO PROCEEDING WITH WORK.

STRUCTURAL DRAWINGS SHALL BE USED IN CONJUNCTION WITH ARCHITECTURAL DRAWINGS. PRIMARY STRUCTURAL ELEMENTS ARE DIMENSIONED ON STRUCTURAL PLANS AND DETAILS AND OVERALL LAYOUT OF STRUCTURAL PORTION OF WORK. SOME SECONDARY ELEMENTS ARE NOT DIMENSIONED, SUCH AS WALL CONFIGURATIONS, INCLUDING EXACT DOOR AND WINDOW LOCATIONS, ALCOVES, SLAB SLOPES AND DEPRESSIONS, CURBS, ETC. VERTICAL DIMENSIONAL CONTROL IS DEFINED BY ARCHITECTURAL WALL SECTIONS AND BUILDING SECTIONS. STRUCTURAL DETAILS SHOW DIMENSIONAL RELATIONSHIPS TO CONTROL DIMENSIONS DEFINED BY ARCHITECTURAL DRAWINGS. DETAILING AND SHOP DRAWING PRODUCTION FOR STRUCTURAL ELEMENTS WILL REQUIRE DIMENSIONAL INFORMATION CONTAINED IN **BOTH** ARCHITECTURAL AND STRUCTURAL DRAWINGS.

DESIGN CRITERIA

VERTICAL LOADS

AREA	DESIGN DEAD LOAD	LIVE LOAD (2)	PARTITION LOAD	CONCENTRATED LOADS
HIGH ROOF	30 PSF	25 PSF (1)		300#
ROOF TERRACE WITH PV	40 PSF	40 PSF		
VEGETATED ROOF	80 PSF	40 PSF		
FLOOR	20 PSF	40 PSF		

(1) DRIFT AND UNBALANCED SNOW LOAD PER ASCE 7-16, CHAPTER 7.
(2) LIVE LOADS EXCEPT SNOW LOADS ARE REDUCED PER IBC SECTION 1607.11.
(3) LIVE LOAD REDUCTION NOT PERMITTED EXCEPT AS NOTED IN IBC SECTION 1607.11.
(4) LIVE LOAD REDUCTION NOT PERMITTED.

SNOW: (MINIMUM ROOF SNOW LOAD = 25 PSF)

Pg = 16 PSF = GROUND SNOW LOAD
Pf = 0.7CeCtIsPg = FLAT ROOF SNOW LOAD
Ps = CsPf = SLOPED ROOF SNOW LOAD
Is = 1.0, Ce = 1.0, Ct = 1.0, Cs = VARIES

LATERAL FORCES

LATERAL FORCES ARE TRANSMITTED BY DIAPHRAGM ACTION OF ROOF AND FLOORS TO SHEAR WALLS / BRACED FRAMES. LOADS ARE THEN TRANSFERRED TO FOUNDATION BY SHEAR WALL / BRACED FRAME ACTION WHERE ULTIMATE DISPLACEMENT IS RESISTED BY PASSIVE PRESSURE OF EARTH AND/OR SLIDING FRICTION. OVERTURNING IS RESISTED BY DEAD LOAD OF THE STRUCTURE.

LATERAL FORCE RESISTING SYSTEM: ALL MEMBERS AND CONNECTIONS REFERRED TO AS LATERAL FORCE RESISTING SYSTEM (LFRS) SHALL COMPLY WITH REQUIREMENTS OF THE SEISMIC FORCE RESISTING SYSTEM AND THE WIND FORCE RESISTING SYSTEM SET FORTH IN THE SPECIAL INSPECTION REQUIREMENTS OF IBC SECTION 1704 AND 1705, AND AS NOTED IN THE STATEMENT OF SPECIAL INSPECTIONS.

WIND:

THE BUILDING MEETS THE CRITERIA TO USE THE "ENCLOSED, PARTIALLY ENCLOSED, AND OPEN BUILDING OF ALL HEIGHTS PROCEDURE" PER ASCE 7-16.

- EXPOSURE CATEGORY = D
- BASIC WIND SPEED, (3 SEC. GUST), V_{ULT} = 97 MPH; V_{ASD} = 76 MPH
- RISK CATEGORY PER IBC TABLE 1604.5 = II
- TOPOGRAPHIC FACTOR K_{ZT} = 1.0
- INTERNAL PRESSURE COEFFICIENT (ENCLOSED) = ± 0.18
- COMPONENTS AND CLADDING LOADS, SEE THE FOLLOWING TABLES:

ROOF SURFACES [1]					
EFFECTIVE WIND AREA	POSITIVE PRESSURES (PSF)	NEGATIVE PRESSURES (PSF)			
		ZONE [3]			
	ALL ZONES	1'	1	2	3
10 SF	16.0	-24.8	-43.1	-56.9	-77.5
20 SF	16.0	-24.8	-40.3	-53.2	-70.2
50 SF	16.0	-24.8	-36.5	-48.4	-60.5
100 SF	16.0	-24.8	-33.7	-44.7	-53.2

WALL SURFACES AND ROOF OVERHANGS [1]				
EFFECTIVE WIND AREA	POSITIVE PRESSURE (PSF)		NEGATIVE PRESSURE (PSF)	
	ZONE [2]			
	4	5	4	5
10 SF	27.1	27.1	-29.4	-36.2
20 SF	25.8	25.8	-28.1	-33.8
50 SF	24.2	24.2	-26.5	-30.6
100 SF	23.0	23.0	-25.3	-28.1
500 SF	20.2	20.2	-22.5	-22.5

ROOF OVERHANGS [1]				
EFFECTIVE WIND AREA	NEGATIVE PRESSURE (PSF)			
	ZONE [3]			
	1'	1	2	3
10 SF	-43.1	-43.1	-56.9	-77.5
20 SF	-42.4	-42.4	-52.0	-69.0
50 SF	-41.5	-41.5	-45.5	-57.7
100 SF	-40.8	-40.8	-40.7	-49.2
500 SF	-39.2	-39.2	-29.4	-29.4

1. VALUES SHOWN IN TABLE ARE GROSS ULTIMATE WIND PRESSURES.
2. WALL ZONES ARE AS DEFINED BY FIGURE 30.3-1 FOR ASCE 7-16 IN LOW RISE BUILDINGS.
3. ROOF ZONES ARE AS DEFINED BY FIGURES 30.3-2 THROUGH 30.3-7 IN ASCE 7-16 FOR LOW RISE BUILDINGS.

SEISMIC: (ASCE 7-16) V = CsW

WHERE $C_s = \dfrac{S_{DS}}{\left(\frac{R}{I_e}\right)}$; WITH

C_s MINIMUM = 0.044 $S_{DS} I_E \geq 0.01$

OR

C_s MINIMUM = $\dfrac{0.5S_1}{\frac{R}{I_e}}$ FOR $S_1 > 0.6g$

C_s MAXIMUM = $\dfrac{S_{D1}}{T\left(\frac{R}{I_e}\right)}$ FOR $T \leq T_L$

OR

C_s MAXIMUM = $\dfrac{S_{D1}T_L}{T^2\left(\frac{R}{I_e}\right)}$ FOR $T > T_L$

SEISMIC IMPORTANCE FACTOR, Ie = 1.0
RISK CATEGORY OF BUILDING PER IBC TABLE 1604.5 = II
SPECTRAL RESPONSE ACCELERATIONS Ss = 1.449 & S_1 = 0.501
SITE CLASS PER TABLE 20.3-1 = D
DESIGN SPECTRAL RESPONSE ACCELERATIONS S_{DS} = 0.966
SEISMIC DESIGN CATEGORY = D
W = EFFECTIVE SEISMIC WEIGHT OF BUILDING = 404K
ANALYSIS PROCEDURE USED = EQUIVALENT LATERAL FORCE PROCEDURE
RESPONSE MODIFICATION FACTOR PER TABLE 12.2-1, R = 5
Cs = 0.193
DESIGN BASE SHEAR V = 77.9K

PIPES, DUCTS AND MECHANICAL EQUIPMENT SUPPORTED OR BRACED FROM STRUCTURE. CONFORM TO SHEET METAL AND AIR CONDITIONING CONTRACTORS' NATIONAL ASSOCIATION, INC. PUBLICATION "SEISMIC RESTRAINT MANUAL: GUIDELINES FOR MECHANICAL SYSTEMS". SPRINKLER LINE ATTACHMENTS SHALL CONFORM TO NFPA PAMPHLET 13.

FOUNDATION DESIGN CRITERIA (REPORT BY ASPECT CONSULTING PROJECT NO. 200631, SEPTEMBER 2, 2021 AND ADDENDUM DATED APRIL 26, 2022).

ACTIVE PRESSURES - UNRESTRAINED		
BACKSLOPE CONDITION	CANTILEVERED CONCRETE RETAINING WALL	SOLDIER PILE WALL**
FLAT	40 PCF	40 PCF
2H:1V	63 PCF	63 PCF
>2H:1V UP TO 1H:1V MAX.	100 PCF	100 PCF

SOIL BEARING PRESSURE: 1500 PSF *

PASSIVE RESISTANCE: 350 PCF FOR LEVEL FORESLOPE; 110 PCF FOR 2H:1V FORESLOPE (INCLUDES F.O.S. ≥ 1.5)
COEFFICIENT OF FRICTION: .30 (INCLUDES F.O.S. ≥ 1.5)
*1/3 INCREASE ALLOWED FOR SEISMIC OR WIND LOADING
** MIN. ULTIMATE SOLDIER PILE DESIGN SHEAR = 180 KIPS FOR ECA WALL, 25 KIPS FOR SOUTH PROPERTY LINE WALL

ALL FOOTINGS SHALL BEAR ON DEEP FOUNDATIONS THAT BEAR ON DENSE, HIGH-STRENGTH PRE-OLYMPIA NONGLACIAL DEPOSITS BENEATH FILL. ALL SLABS ON GRADE SHALL BEAR ON STRUCTURAL BACKFILL WITH A MINIMUM DEPTH OF 18 INCHES PLACED ON A FIRM, UNYIELDING SUBGRADE. NATIVE EARTH BEARING SHALL BE SURFACE COMPACTED. AREAS OVER-EXCAVATED SHALL BE BACKFILLED WITH "STRUCTURAL BACKFILL". AREAS DESIGNATED "STRUCTURAL BACKFILL" SHALL BE FILLED WITH APPROVED WELL-GRADED BANKRUN MATERIAL. SURFICIAL FILL DEPOSITS ARE GENERALLY NOT SUITABLE FOR REUSE AS STRUCTURAL FILL. MAXIMUM SIZE OF ROCK 4". FROZEN SOIL, ORGANIC MATERIAL AND DELETERIOUS MATTER NOT ALLOWED. AT SLABS ON GRADE, COMPACT TO AT LEAST 95% OF ITS MAXIMUM DENSITY AS DETERMINED BY ASTM D1557. CONTRACTOR SHALL EXERCISE EXTREME CARE DURING EXCAVATION TO AVOID DAMAGE TO BURIED LINES, TANKS, AND OTHER CONCEALED ITEMS. UPON DISCOVERY, DO NOT PROCEED WITH WORK UNTIL RECEIVING WRITTEN INSTRUCTIONS FROM ARCHITECT. A COMPETENT REPRESENTATIVE OF THE OWNER SHALL INSPECT ALL FOOTING EXCAVATIONS FOR SUITABILITY OF BEARING SURFACES PRIOR TO PLACEMENT OF REINFORCING STEEL. PROVIDE DRAINAGE AND DEWATERING AROUND ALL WORK TO AVOID WATER-SOFTENED FOOTINGS.

FREE DRAINING BACKFILL MATERIAL FOR RETAINING & BASEMENT WALLS

A CLEAN, FREE DRAINING, WELL GRADED GRANULAR MATERIAL CONFORMING TO ASTM D2487 GW OR SW WHOSE MAXIMUM PARTICLE SIZE DOES NOT EXCEED 3/4" AND WHOSE FINES CONTENT (MATERIAL PASSING THE NO. 200 SIEVE) DOES NOT EXCEED 5%,

WITH A MAXIMUM DUST RATIO $\dfrac{\text{\% PASSING U.S. NO. 200 SIEVE}}{\text{\% PASSING U.S. NO. 40 SIEVE}}$ = 2/3 MAX.

STEEL PIPE PILES

PIPE PILES: 4" TO 6" NOMINAL DIAMETER GALVANIZED SCHEDULE 40 DRIVEN TO REFUSAL = 20K TO 30K ALLOWABLE AXIAL COMPRESSION.

REFUSAL: LESS THAN 1" OF PENETRATION IN 20 SECONDS OF CONSTANT DRIVING WITH A MINIMUM OF 850 LB HAMMER FOR 4" PIPE OR 2000 LB HAMMBER FOR 6" PIPE.

3' MINIMUM EMBED INTO UNDERLYING PRE-OLYMPIA NONGLACIAL DEPOSITS OR AS OTHERWISE APPROVED BY GEOTECHNICAL ENGINEER BASED ON OBSERVATIONS DURING PILE DRIVING, WHICHEVER IS DEEPER.

TESTING: ALLOWABLE LOADS TO BE VERIFIED BY LOAD TESTS IN ACCORDANCE WITH ASTM D-1143 "QUICK LOAD TEST". A MINIMUM OF 3% OF THE TOTAL PILES SHALL BE TESTED A MINIMUM OF ONE TIME AND MAXIMUM OF 5 TIMES PER PILE.

1

MATERIAL: PIPE PILES - ASTM A252 GR3 (Fy = 45 KSI), H PILES - ASTM A992 (Fy = 50 KSI).

TIP DESIGN: TIP DESIGN SHALL BE PER CONTRACTOR AND TAKE INTO CONSIDERATION INSTALLATION REQUIREMENTS.

INSTALLATION: INSTALL IN A TRUE VERTICAL POSITION. REFER TO THE GEOTECHNICAL REPORT TO DETERMINE THE GENERALIZED SUBSURFACE PROFILES, DRIVEABILITY, SOIL PROPERTIES, CONSTITUENTS, EXISTING SITE FEATURES AND CONDITIONS, AND LOAD TESTING PROTOCALS.

INDICATOR PILES: THE LENGTH OF THE PILE REQUIRED AND THE PILE INSTALLATION SHALL BE VERIFIED IN THE FIELD BY A QUALIFIED INSPECTOR WHO WILL EVALUATE THE CONTRACTOR'S OPERATION AND COLLECT, INTERPRET AND RECORD DATA. A MINIMUM OF TWO INDICATOR PILES SHALL BE DRIVEN BEFORE ORDERING PRODUCTION PILES TO ESTIMATE THE TRUE PILE LENGTHS AND DETERMINE DRIVING CHARACTERISTICS AND PROBLEMS. A QUALIFIED INSPECTOR SHALL EVALUATE INSTALLATION OF INDICATOR PILES.

SOLDIER PILE RETAINING WALLS

INSTALL GENERALLY PER 2014 WSDOT STANDARD SPECIFICATIONS 6-05.

GEOTECHNICAL CRITERIA: REFER TO DESIGN CRITERIA SECTION.

CONCRETE PILES

ITEM	WSDOT CONCRETE CLASS	MAX. SLUMP (INCHES)	MAX. AGGREGATE SIZE	MAX. W/C RATIO
PILES WITH DRY HOLE	CDF	10"	SAND	2
PILES WITH WET HOLE	LEAN CONCRETE	10"	3/8"	2

1. SUBMIT PROPOSED MIX DESIGN FOR REVIEW.
2. WSDOT CLASS 4000P MAY BE USED AT CONTRACTOR'S PREFFERENCE AT LOWER EMBEDMENT HEIGHT.
3. DO NOT REMOVE EARTH IN FRONT OF THE PILING UNTIL CONCRETE HAS CURED TO STRENGTH.

CONTINUOUS FLIGHT AUGER PILE OPTION: PILES SHALL BE INSTALLED BY DRILLING TO THE REQUIRED DEPTH WITH A CONTINUOUS FLIGHT, HOLLOW-STEM AUGER. CONCRETE SHALL BE PUMPED UNDER PRESSURE THROUGH THE HOLLOW AUGER AS THE AUGER IS WITHDRAWN, RESULTING IN A CAST-IN-PLACE PILE. THE CONTRACTOR SHALL PROVIDE A PRESSURE GAUGE IN THE GROUT LINE BETWEEN THE PUMP AND THE AUGER AND A MEANS OF MEASURING THE QUANTITY OF GROUT USED IN EACH PILE. IMMEDIATELY FOLLOWING WITHDRAWAL OF THE AUGER, STEEL PILE SHALL BE PLACED. CONFORM TO IBC 1808 AND 1810.

OPEN HOLE PILE OPTION: DRILL CONTINUOUSLY TO PROPER ELEVATION. PLACE CONCRETE AND STEEL PILE IMMEDIATELY AFTER DRILLING IS COMPLETE. BOTTOM OF PILE SHALL BE IMMEDIATELY SEALED WITH CONCRETE IF GROUNDWATER INFILTRATION OCCURS. EXCESS WATER IN PILE SHALL BE REMOVED WHEN OVER 12" DEEP. STEEL PILE SHALL BE INSTALLED AFTER CONCRETE PLACEMENT. PROVIDE CASING AS REQUIRED. CASING SHALL BE REMOVED 1" CLEAR MINIMUM FROM LAGGING. CONFORM TO IBC 1808 AND 1810. ALL ROCKS AND OBSTRUCTIONS SHALL BE REMOVED PRIOR TO DRILLING OPERATIONS.

STEEL PILES

MATERIAL: ASTM A992 OR A572, GRADE 50 Fy = 50 KSI.

INSTALLATION: INSTALL IN A TRUE VERTICAL POSITION. ALIGN THE FRONT FLANGES FOR CONSISTENT ALIGNMENT ALONG THE WALL. BE EXTREMELY CAREFUL WHEN REMOVING THE CONCRETE AROUND THE FRONT FLANGE TO AVOID DAMAGE TO THE PILE AND COATING. FIELD SPLICING SHALL BE DONE AT THE UPPER END OF THE PILE WITH CONTINUOUS SPECIAL INSPECTION.

COATING: PRIMER COAT WITH INORGANIC ZINC RICH 2 COMPONENT COMPOUND WITH MINIMUM DRY THICKNESS OF 3 MIL MINIMUM, PREPARE STEEL FOR COATING WITH SSPC-10 WITH MIST PRIMER. RECOAT IN THE FIELD WHERE DAMAGED AND NOT PERMANENTLY CAST IN CONCRETE.

WOOD LAGGING:

HEM-FIR OR DOUGLAS FIR/LARCH WITH #2 OR BETTER GRADE. PRESSURE TREAT WITH CA-C, CCA, AQC OR ACZA, WITH 0.20 PCF MIN. RETENTION WITH APPROPRIATE INCISING. CONFORM TO 1999 APWA STANDARD C2. INSTALL LAGGING UNIFORMLY AND CONSISTENTLY HORIZONTAL. PROVIDE SINGLE FULL SPAN PIECES BETWEEN PILES. KEY EACH MEMBER BEHIND STEEL PILE FLANGES AS DETAILED. FIELD TREAT CUTS AND HOLES WITH COPPER NAPHTHENATE (9% SOLUTION), APPLIED LIBERALLY WITH 2 COATS.

DRAINAGE MAT:

PROVIDE COMPLETE INTEGRATED SYSTEM COMPONENTS FOR THE MAT AND DRAIN PIPE. CONFORM TO STANDARD SPECIFICATIONS 6-16.3(7) FOR GENERAL DESCRIPTION AND 9-33.2(3) FOR MATERIALS. CONFORM TO BDM DRAWING 8.1-A3-5 AND PRODUCT MANUFACTURER FOR SYSTEM DETAILS. REFER TO CIVIL DRAWINGS FOR DRAINAGE COLLECTION.

SOLDIER PILES: ALL SOLDIER PILES SITUATED WITHIN FOUR VERTICAL FEET OR LESS OF THE ESTABLISHED GRADE SHALL BE REMOVED AT OR PRIOR TO COMPLETION OF CONSTRUCTION.

MONITORING: SEE GEOTECHNICAL REPORT FOR MONITORING REQUIREMENTS.

MILLER HULL
The Miller Hull Partnership, LLP
Architecture and Planning
Polson Building
71 Columbia, Sixth Floor
Seattle, WA 98104

Phone: 206.682.6837
Contact: Name

PCS Structural Solutions
Seattle | Tacoma | Portland
www.pcs-structural.com

STAMP

MERCER ISLAND HOUSE: CASCADE

6838 96TH AVE SE
MERCER ISLAND, WA 98040

SUBMITTAL

100% CONSTRUCTION DOCUMENTS

February 24, 2023

REVISIONS

No.	Description	Date
1	BUILDING PERMIT RESUBMITTAL	10/27/22

Drawn: DEH
Checked: TJR
M|H Proj No.: A20.0085.00

Issue Date: February 24, 2023

SHEET

GENERAL NOTES
S001

C:_Revit Models\21201 Mercer Island Residence R2022 (Central)_DEHollar.rvt

CONCRETE

CAST-IN-PLACE CONCRETE

MIX DESIGNS: THE CONTRACTOR SHALL DESIGN CONCRETE MIXES THAT MEET OR EXCEED THE REQUIREMENTS OF THE CONCRETE MIX TABLE. THE MIX DESIGNS SHALL FACILITATE ANTICIPATED PLACEMENT METHODS, WEATHER, REBAR CONGESTION, ARCHITECTURAL FINISHES, CONSTRUCTION SEQUENCING, STRUCTURAL DETAILS, AND ALL OTHER FACTORS REQUIRED TO PROVIDE A STRUCTURALLY SOUND, AESTHETICALLY ACCEPTABLE FINISHED PRODUCT. REFER TO PROJECT SPECIFICATIONS FOR SUSTAINABILITY PERFORMANCE REQUIREMENTS. WATER REDUCING ADMIXTURES WILL LIKELY BE REQUIRED TO MEET THESE REQUIREMENTS. CONCRETE MIX DESIGNS SHALL CLEARLY INDICATE THE TARGET SLUMP. SLUMP TOLERANCE SHALL BE ± 1-1/2 INCHES.

AGGREGATE: COARSE AND FINE AGGREGATE SHALL CONFORM TO ASTM C33

CEMENT: CEMENT SHALL CONFORM TO ASTM C150. TYPE II PORTLAND CEMENT OR ASTM C595 - TYPE IL PORTLAND LIMESTONE CEMENT, UNLESS NOTED OTHERWISE.

FLYASH OR OTHER NATURAL POZZOLANIC MATERIALS: SHALL CONFORM TO ASTM C618 CLASS C OR F, MAXIMUM LOSS ON IGNITION SHALL BE 1.0%.

SLAG: GROUND GRANULATED BLAST-FURNACE (GGBF) SLAG SHALL CONFORM TO ASTM C989 GRADE 100 OR 120.

SILICA FUME: SHALL CONFORM TO ASTM C1240.

ALTERNATE MIX DESIGNS: VARIATIONS TO THE MIX DESIGN PROPORTIONS MAY BE ACCEPTED IF SUBSTANTIATED IN ACCORDANCE WITH ACI 318, CHAPTER 19. PROVIDE SUBMITTALS A MINIMUM OF TWO WEEKS PRIOR TO BID FOR DETERMINATION OF ACCEPTABILITY.

ADMIXTURES: ADMIXTURES SHALL BE BY MASTER BUILDERS, W.R. GRACE, OR PRE-APPROVED EQUAL. ALL MANUFACTURER'S RECOMMENDATIONS SHALL BE FOLLOWED.

WATER: SHALL BE CLEAN AND POTABLE.

MAXIMUM CHLORIDE CONTENT: THE MAXIMUM WATER SOLUBLE CHLORIDE CONTENT SHALL NOT EXCEED 0.15% BY WEIGHT OF CEMENTITIOUS MATERIAL UNLESS NOTED OTHERWISE.

SHOTCRETE: SHALL CONFORM TO IBC SECTION 1908.

ITEM	MIN. f'c (PSI) (AT 56 DAYS)	DENSITY (1)	EXPOSURE CLASS (2)	AGGREGATE GRADING ASTM AASHTO	MAX. SHRINKAGE LIMIT (%) (3)	NOTES
SLAB ON GRADE - EXPOSED TO WEATHER	4000	NWC	F2, S0, W1, C1	57 OR 67	0.04	
SLABS ON GRADE - U.N.O.	4000	NWC	F1, S0, W1, C1	57 OR 67	0.04	
ARCHITECTURALLY EXPOSED SLABS ON GRADE	4500	NWC	F2, S0, W1, C1	57 OR 67	0.035	1, 2
FOUNDATIONS - U.N.O.	3000	NWC	F0, S0, W0, C0	57 OR 67	--	--
MAT FOUNDATIONS	4000	NWC	F1, S0, W1, C1	57 OR 67	--	4
STEM WALLS AND OTHER WALLS EXPOSED TO EARTH OR WEATHER	4500	NWC	F2, S0, W1, C1	57 OR 67	0.04	4
STEM WALLS AND OTHER WALLS - U.N.O.	4000	NWC	F1, S0, W1, C1	57 OR 67	--	--
SHEAR WALLS	4000	NWC	--	7 OR 8	0.04	4
SOLDIER PILE SHOTCRETE	5000	NWC	F2, S0, W1, C1	7 OR 8	0.04	--
CONTROLLED DENSITY FILL (CDF)	200	--	--	SAND	--	3
ALL OTHER CONCRETE	4000	NWC	F0, S0, W0, C0	57 OR 67	--	--

(1) NWC: NORMAL-WEIGHT CONCRETE.
(2) EXPOSURE CLASSES ARE BASED ON ACI 318, CHAPTERS 19 AND 26.
(3) SHRINKAGE MEASUREMENTS SHALL BE IN ACCORDANCE TO ASTM C157.

CONCRETE MIX NOTES:

1. MAXIMUM WATER CONTENT 240 PCY.
2. THIS MIX SHALL CONTAIN 1 GALLON PER CY OF 'ECLIPSE' SHRINKAGE REDUCING ADD MIXTURE BY W.R. GRACE OR APPROVED ALTERNATE. FOR CONCRETE REQUIRING AN AIR ENTRAINMENT ADMIXTURE, 'ECLIPSE PLUS' SHALL BE USED.
3. SAND - CEMENT CONCRETE GROUT.
4. PROVIDE HYDROPHOBIC CONCRETE AT BASEMENT WALLS, AND AS NOTED IN DETAILS. THIS MIX SHOULD CONTAIN (1) GALLON OF 'HYCRETE 360' WATERPROOFING ADMIXTURE BY HYCRETE, 'ADMIX' WATERPROOFING ADMIXTURE BY XYPEX, OR PRE-APPROVED ALTERNATE PER CUBIC YARD OF CONCRETE. MIXES UTILIZING A WATERPROOFING ADMIXTURE SHALL CONTAIN A LIMITED AMOUNT OF SUPPLEMENTAL CEMENTITIOUS MATERIALS, NOTED IN THE SPECIFICATIONS AND A MAXIMUM W/C RATIO OF 0.42.

CONCRETE PLACEMENT

PLACE CONCRETE FOLLOWING ALL APPLICABLE ACI RECOMMENDATIONS. CONCRETE SHALL BE PROPERLY CONSOLIDATED PER ACI 309 USING INTERIOR MECHANICAL VIBRATORS, DO NOT OVER-VIBRATE. CONCRETE SHALL BE POURED MONOLITHICALLY BETWEEN CONSTRUCTION OR EXPANSION JOINTS. IF CONCRETE IS PLACED BY THE PUMP METHOD, HORSES SHALL BE PROVIDED TO SUPPORT THE HOSE, THE HOSE SHALL NOT BE ALLOWED TO RIDE ON THE REINFORCING. WEATHER FORECASTS SHALL BE MONITORED AND ACI RECOMMENDATIONS FOR HOT AND COLD WEATHER CONCRETING SHALL BE FOLLOWED AS REQUIRED. CONCRETE SHALL NOT FREE FALL MORE THAN 5 FEET DURING PLACEMENT WITHOUT WRITTEN APPROVAL OF STRUCTURAL ENGINEER.

FLOATING & FINISHING OPERATIONS

WATER SHALL NOT BE ADDED TO THE CONCRETE SURFACE DURING FLOATING & FINISHING OPERATIONS. PRE-APPROVED EVAPORATION RETARDER SPECIFICALLY DESIGNED FOR FLOATING & FINISHING OPERATIONS ARE ACCEPTABLE.

FORMED SURFACES:
ARCH SPEC. SECTIONS THAT ARE MORE STRINGENT SUPERCEDE STRUCTURAL GENERAL NOTES.

FORMWORK CLASS OF SURFACE PER ACI 347 TABLE 3.1	
ITEM	CLASS OF FINISH
ALL SURFACES EXPOSED TO PUBLIC VIEW, U.N.O.	A
ALL SURFACES RECEIVING A COURSE TEXTURED COATING SUCH AS PLASTER OR STUCCO, UNLESS NOTED OTHERWISE	B
ALL OTHER SURFACES, UNLESS NOTED OTHERWISE	C

FORMWORK STRIPPING

WALLS: WALLS NOT SUPPORTING FRAMING WEIGHT MAY BE STRIPPED AS SOON AS FORMS CAN BE REMOVED WITHOUT DAMAGING THE CONCRETE AND THE CONCRETE HAS REACHED A MINIMUM COMPRESSIVE STRENGTH OF 500 PSI.

SLABS: SLABS MAY BE STRIPPED AND BECOME SELF SUPPORTING AS SOON AS THEIR COMPRESSIVE STRENGTH REACHES 75% OF THE SPECIFIED DESIGN STRENGTH. RESHORING SHALL BE PROVIDED FOR ALL CONSTRUCTION LOADS THEREAFTER PER THE GENERAL CONTRACTOR.

COLD WEATHER PLACEMENT:

1. COLD WEATHER IS DEFINED BY ACI 306 AS "A PERIOD WHEN FOR MORE THAN 3 SUCCESSIVE DAYS THE MEAN DAILY TEMPERATURE DROPS BELOW 40° F."
2. NO CONCRETE SHALL BE PLACED ON FROZEN OR PARTIALLY FROZEN GROUND. THAWING THE GROUND WITH HEATERS IS PERMISSIBLE.
3. CONCRETE MIX TEMPERATURES SHALL BE AS SHOWN BELOW. HEATING OF WATER AND/OR AGGREGATES MAY BE REQUIRED TO ATTAIN THESE TEMPERATURES.
4. THE CONCRETE MAY REQUIRE PROTECTION FOR 4-7 DAYS AFTER POURING. IF TEMPERATURES REMAIN BELOW FREEZING, INSULATING BLANKET COVERAGE IS REQUIRED. IF TEMPERATURES ARE SLIGHTLY BELOW FREEZING (30° F MIN.) AT NIGHT AND ABOVE FREEZING DURING THE DAY, KRAFT PAPER WITH COMPLETE COVERAGE MAY BE USED IN LIEU OF INSULATED BLANKETS.
5. NO ADDITIVES CONTAINING CHLORIDES SHALL BE USED. USE "POZZUTEC 20+" BY MASTER BUILDERS OR "POLARSET" BY W.R. GRACE OR PRE-APPROVED EQUAL.

CONDITION OF PLACEMENT AND CURING		WALLS & SLABS	FOOTINGS
MIN. TEMP. FRESH CONCRETE AS MIXED FOR WEATHER INDICATED, DEGREES F.	ABOVE 30° F. 0° TO 30° F. BELOW 0° F.	60° 65° 70°	55° 60° 65°
MIN. TEMP. FRESH CONCRETE AS PLACED AND MAINTAINED, DEGREES F.		55°	50°
MAX. ALLOWABLE GRADUAL DROP IN TEMP. THROUGHOUT FIRST 24 HOURS AFTER END OF PROTECTION, DEGREES F.		50°	40°

HOT OR WINDY WEATHER PLACEMENT

HOT WEATHER IS DEFINED BY ACI 305 AS "ANY COMBINATION OF HIGH AIR TEMPERATURE, LOW RELATIVE HUMIDITY, AND WIND VELOCITY, TENDING TO IMPAIR THE QUALITY OF FRESH HARDENED CONCRETE. ACI 305 FIGURE 2.1.5 SHALL BE USED BY THE CONTRACTOR TO ESTIMATE THE RATE OF EVAPORATION. WHEN THE ESTIMATED RATE OF EVAPORATION IS GREATER THAN 0.2 PSF/HOUR THE PLACEMENT SHALL BE CONSIDERED A HOT WEATHER PLACEMENT. PRECAUTIONS AGAINST PLASTIC SHRINKAGE CRACKING ARE NECESSARY. PRECAUTIONS TAKEN BY THE CONTRACTOR VARY DEPENDING UPON THE FACTORS ASSOCIATED WITH WATER EVAPORATION AND INCLUDE BUT ARE NOT LIMITED TO:

1. LIMITING CONCRETE TEMPERATURE TO 100°F AT TIME OF PLACEMENT.
2. APPLICATION OF AN EVAPORATION RETARDER.
3. USE OF FOG SPRAY.
4. REDUCTION OF POUR SIZE.
5. PLACING CONCRETE AT NIGHT.

CONTROL AND CONSTRUCTION JOINTS

CONSTRUCTION JOINTS SHALL MEET THE REQUIREMENTS OF ACI 301 SECTIONS 2.2.2.5 AND 5.3.2.6. SPECIAL BONDING METHODS PER SECTION 5.3.2.6 SHALL BE SATISFIED BY ITEM 5 BELOW UNLESS OTHERWISE DETAILED ON THE STRUCTURAL DRAWINGS. WHERE CONSTRUCTION JOINTS ARE NOT SHOWN ON PLAN OR ADDITIONAL CONSTRUCTION JOINTS ARE REQUIRED SUBMIT PROPOSED JOINTING FOR STRUCTURAL ENGINEERS APPROVAL. PROVIDE CONSTRUCTION JOINTS AS INDICATED BELOW UNLESS NOTED OTHERWISE ON THE PLANS:

1. SLABS ON GRADE: PROVIDE CONSTRUCTION AND/OR CONTROL JOINTS AT 16 FEET O.C. MAXIMUM FOR UNEXPOSED SLABS ON GRADE AND 12 FEET O.C. FOR EXPOSED SLABS ON GRADE. COORDINATE JOINTS WITH ARCHITECTURAL DRAWINGS.
2. WALLS: COORDINATE CONSTRUCTION JOINTS WITH ARCHITECTURAL REVEALS.
3. BONDING AGENT: WHERE BONDING AGENT IS SPECIFICALLY CALLED OUT ON THE STRUCTURAL DRAWINGS USE "WELD CRETE" BY LARSON PRODUCTS CORPORATION OR PRE-APPROVED EQUAL. FOLLOW ALL MANUFACTURERS RECOMMENDATIONS.

EMBEDDED ITEMS

1. NO ALUMINUM ITEMS SHALL BE EMBEDDED IN ANY CONCRETE.
2. ALL EMBED PLATES SHALL BE SECURELY FASTENED IN PLACE.
3. ALL EMBEDDED STEEL ITEMS EXPOSED TO WEATHER SHALL BE PAINTED UNLESS NOTED AS GALVANIZED. SEE DRAWINGS AND SPECIFICATIONS FOR PAINT, PRIMER, AND GALVANIZING REQUIREMENTS.

CONCRETE CURING AND SEALING

CURING PROCEDURES SHALL COMMENCE IMMEDIATELY AFTER FINISHING CONCRETE TO MAINTAIN CONCRETE IN A MOIST CONDITION. VERIFY CURING AND/OR SEALING PRODUCTS ARE COMPATIBLE WITH FLOOR COVERINGS SHOWN ON THE ARCHITECTURAL DRAWINGS. FOLLOW ALL MANUFACTURER'S RECOMMENDATIONS. SLABS ARE DEFINED AS SLABS ON GRADE, CONCRETE ON METAL DECK, ELEVATED POST-TENSIONED OR MILD REINFORCED DECKS, AND TOPPING SLABS.

ITEM	CONCRETE CURING NOTES
SLABS EXPOSED TO EARTH OR WEATHER OR VEHICLE OR FORKLIFT TRAFFIC INCLUDING LOADING DOCKS	1, (3 OR 4 OR 5), 6
ALL OTHER SLABS	1, (3 OR 4 OR 5)
FORMED SURFACES EXCLUDING FOUNDATIONS	2
SHOTCRETE WALLS	4
ALL OTHER CONCRETE	NONE

CONCRETE CURING NOTES:

1. WHEN THE ESTIMATED EVAPORATION RATE IS GREATER THAN 0.2 PSF/HOUR PROVIDE A SPRAY APPLIED EVAPORATION RETARDER IMMEDIATELY AFTER CONCRETE PLACEMENT. THE EVAPORATION RATE MAY BE CALCULATED PER ACI 305 FIGURE 2.1.5.
2. APPLY A LIQUID MEMBRANE FORMING CURING COMPOUND, CONFORMING TO ASTM C309 TYPE 1 CLASS B SPECIFICATIONS, PER MANUFACTURER'S RECOMMENDATIONS TO ALL FORMED SURFACES IMMEDIATELY AFTER FINAL FORM REMOVAL. NOT REQUIRED IF FORMWORK REMAINS IN PLACE FOR MORE THAN 7 DAYS.
3. PROVIDE PRE-APPROVED CONTINUOUS WET CURE METHOD FOR A MINIMUM OF 14 DAYS.
4. APPLY A LIQUID MEMBRANE FORMING CURING COMPOUND, CONFORMING TO ASTM C309 TYPE 1 CLASS B SPECIFICATIONS OR ASTM C1315 TYPE 1 CLASS A SPECIFICATIONS, PER MANUFACTURER'S RECOMMENDATIONS IMMEDIATELY AFTER FINAL FINISHING. CURING COMPOUND SHALL BE COMPATIBLE WITH ARCHITECTURAL FLOOR COVERINGS AND SEALERS.
5. PROVIDE 'ULTRACURE MAX' MOISTURE RETAINING COVER BY MCTECH GROUP, OR APPROVED EQUAL, FOR A MINIMUM OF 14 DAYS.
6. APPLY A SILANE SEALER WITH MINIMUM SOLIDS CONTENT OF 40% PER MANUFACTURER'S RECOMMENDATIONS.

GROUT

NON-SHRINK GROUT: MASTER BUILDERS "MASTERFLOW 928" OR PRE-APPROVED EQUAL. GROUT SHALL CONFORM TO CRD-C621 AND ASTM C1107 WHEN TESTED AT A FLUID CONSISTENCY PER CRD-C611-85 FOR 30 MINUTES. GROUT MAY BE PLACED FROM A 25 SECOND FLOW TO A STIFF PACKING CONSISTENCY. FILL OR PACK ENTIRE SPACE UNDER PLATES OR SHAPES. FOLLOW MANUFACTURER'S RECOMMENDATIONS FOR PREPARATION, INSTALLATION, AND CURING.

REINFORCING STEEL

REINFORCING STEEL SHALL CONFORM TO:

ASTM A615, GRADE 60 TYPICAL UNLESS NOTED OTHERWISE.

DETAIL FABRICATE AND PLACE PER ACI 315 AND ACI 318.

REINFORCING SPLICE AND DEVELOPMENT LENGTH SCHEDULE, Fy=60 KSI (UNLESS NOTED OTHERWISE)

BAR SIZE	MINIMUM LAP SPLICE LENGTHS ("Ls")		MINIMUM DEVELOPMENT LENGTHS ("Ld")		MINIMUM EMBEDMENT LENGTH FOR STANDARD END HOOKS ("Ldh")
	TOP BARS (1)	OTHER BARS	TOP BARS (1)	OTHER BARS	
#3	2'-0"	1'-6"	1'-6"	1'-3"	0'-7"
#4	2'-8"	2'-0"	2'-0"	1'-7"	0'-9"
#5	3'-4"	2'-7"	2'-7"	2'-0"	1'-0"
#6	4'-0"	3'-1"	3'-1"	2'-4"	1'-2"
#7	5'-10"	4'-6"	4'-6"	3'-6"	1'-5"
#8	6'-8"	5'-2"	5'-2"	3'-11"	1'-7"
#9	7'-6"	5'-10"	5'-10"	4'-6"	1'-9"
#10	8'-6"	6'-6"	6'-6"	5'-0"	2'-0"
#11	9'-5"	7'-3"	7'-3"	5'-7"	2'-3"

SPLICE TABLE NOTES:

1. "TOP BARS" ARE HORIZONTAL BARS WITH MORE THAN 12" DEPTH OF CONCRETE CAST BELOW THEM.

MECHANICAL COUPLERS: "LENTON" BY ERICO, "CADWELD" BY ERICO, "BAR-LOCK" BY DAYTON SUPERIOR L-SERIES, OR PRE-APPROVED EQUAL. COUPLERS SHALL BE TYPE 2 PER ACI 318 SECTION 18.2.7.1.

FORM SAVERS: "LENTON" BY ERICO THREADED FORM SAVERS TYPE FS OR APPROVED EQUAL.

REINFORCING STEEL COVER

PROVIDE CONCRETE COVER OVER REINFORCEMENT AS FOLLOWS, UNLESS NOTED OTHERWISE:

CONCRETE CAST AGAINST EARTH ---------- 3"
EXPOSED TO WEATHER OR EARTH ---------- 2"
WALLS AND SLABS NOT EXPOSED TO WEATHER---- 3/4"

MILLER HULL
The Miller Hull Partnership, LLP
Architecture and Planning
Polson Building
71 Columbia, Sixth Floor
Seattle, WA 98104

Phone: 206.682.6837
Contact: Name

PCS Structural Solutions
Seattle | Tacoma | Portland
www.pcs-structural.com

STAMP

REVIEWED FOR CODE COMPLIANCE
March 27, 2023
SITE COPY

MERCER ISLAND HOUSE: CASCADE

6838 96TH AVE SE
MERCER ISLAND, WA 98040

SUBMITTAL

100% CONSTRUCTION DOCUMENTS

February 24, 2023

REVISIONS

No.	Description	Date

Drawn: DEH
Checked: TJR
M|H Proj No.: A20.0085.00

Issue Date: February 24, 2023

SHEET

GENERAL NOTES
S002

C:_Revit Models\21201 Mercer Island Residence R2022 (Central)_DEHollar.rvt

CONCRETE INSERTS: THREADED DOWEL BAR SUBSTITUTIONS SHALL BE MANUFACTURED BY RICHMOND SCREW ANCHOR CO., INC., OR PRE-APPROVED EQUAL AND SHALL BE CAPABLE OF DEVELOPING THE FULL TENSILE CAPACITY OF THE BAR.

POST-INSTALLED ANCHORS

POST-INSTALLED ANCHORS: SHALL ONLY BE USED WHERE SPECIFIED ON THE CONSTRUCTION DOCUMENTS. THE CONTRACTOR SHALL OBTAIN APPROVAL FROM THE STRUCTURAL ENGINEER PRIOR TO INSTALLING POST-INSTALLED ANCHORS IN PLACE OF MISSING OR MISPLACED CAST-IN-PLACE ANCHORS. CARE SHALL BE TAKEN IN PLACING POST-INSTALLED ANCHORS TO AVOID CONFLICTS WITH REBAR. INSTALL IN ACCORDANCE WITH THE MANUFACTURER'S PUBLISHED INSTALLATION INSTRUCTIONS. INSTALLER SHALL BE QUALIFIED AND TRAINED BY THE MANUFACTURER. HOLES SHALL BE HAMMER DRILLED ONLY (ROTARY DRILLED ONLY AT UNREINFORCED MASONRY - NO HAMMER TOOLS).

SUBSTITUTION REQUESTS, FOR PRODUCTS OTHER THAN THOSE SPECIFIED BELOW, SHALL BE SUBMITTED FOR APPROVAL A MINIMUM OF 2 WEEKS PRIOR TO BID, ALONG WITH CALCULATIONS SHALL BE STAMPED BY A PROFESSIONAL ENGINEER (LICENSED IN THE STATE OF THE PROJECT) DEMONSTRATING THAT THE SUBSTITUTED PRODUCT IS CAPABLE OF ACHIEVING EQUIVALENT PERFORMANCE VALUES (MINIMUM) OF THE SPECIFIED PRODUCT USING THE APPROPRIATE DESIGN PROCEDURE AND/OR STANDARD(S) AS REQUIRED BY THE BUILDING CODE.

CONCRETE ANCHORS:

- ADHESIVE ANCHORS: HILTI HIT-HY 200 (ICC-ESR-3187), HILTI HIT-RE 500 V3 (ICC-ESR-3814), DEWALT PURE 110+ (ICC-ESR-3298), OR SIMPSON SET-3G (ICC-ESR-4057), OR PRE-APPROVED EQUAL.
  - *CONCRETE SHALL BE A MINIMUM OF 21 DAYS OLD AT TIME OF INSTALLATION.
  - *CONCRETE SHALL BE IN THE TEMPERATURE RANGE AS REQUIRED BY THE CONCRETE MANUFACTURER.
  - *HOLE SHALL BY HAMMER-DRILLED ONLY.
  - *DO NOT INSTALL IN WATER-FILLED HOLES.
  - *INSTALLER OF HORIZONTAL OR UPWARDLY INCLINED (ANY POSITION EXCEPT DIRECTLY DOWNWARD) ANCHORS SHALL ALSO BE CERTIFIED BY THE ACI/CRSI ADHESIVE ANCHOR INSTALLER CERTIFICATION PROGRAM.
- EXPANSION ANCHORS: KWIKBOLT TZ (ICC ESR-1917) BY HILTI, INC. OR PRE-APPROVED EQUAL.
- SCREW ANCHORS: KWIK HUS-EZ (ICC ESR-3027) BY HILTI, INC. OR PRE-APPROVED EQUAL.

STRUCTURAL STEEL

DETAILING, FABRICATION AND ERECTION

ALL WORKMANSHIP SHALL CONFORM TO THE AISC MANUAL OF STEEL CONSTRUCTION, 15TH EDITION, THE AISC SPECIFICATION FOR STRUCTURAL STEEL BUILDINGS JULY 7, 2016, THE AISC CODE OF STANDARD PRACTICE, JUNE 15, 2016 AND THE AISC SEISMIC PROVISIONS FOR STRUCTURAL STEEL BUILDINGS, JULY 12, 2016.

STEEL MEMBERS ARE EQUALLY SPACED BETWEEN COLUMNS AND/OR DIMENSION POINTS UNLESS NOTED OTHERWISE.

THE CONTRACTOR SHALL BE RESPONSIBLE FOR ALL ERECTION AIDES AND JOINT PREPARATIONS THAT INCLUDE BUT ARE NOT LIMITED TO, ERECTION ANGLES, LIFT HOLES, AND OTHER AIDES, WELDING PROCEDURES, REQUIRED ROOT OPENINGS, ROOT FACE DIMENSIONS, GROOVE ANGLES, BACKING BARS, WELD EXTENSION TABS, COPES, SURFACE ROUGHNESS VALUES AND TAPERS OF UNEQUAL PARTS. THE CONTRACTOR SHALL BE RESPONSIBLE FOR THE COMPLIANCE WITH ALL CURRENT OSHA REQUIREMENTS.

HOLES, COPES OR OTHER CUTS OR MODIFICATIONS OF THE STRUCTURAL STEEL MEMBERS SHALL NOT BE MADE IN THE FIELD WITHOUT WRITTEN APPROVAL FROM THE STRUCTURAL ENGINEER.

STEEL FABRICATORS

ALL STEEL FABRICATION SHALL BE PERFORMED BY A FABRICATOR CERTIFIED BY THE AMERICAN INSTITUTE OF STEEL CONSTRUCTION. THE FABRICATOR SHALL BE DESIGNATED AN AISC CERTIFIED PLANT, CATEGORY BU AT THE TIME OF BID AND SHALL MAINTAIN THIS CERTIFICATION FOR THE DURATION OF THE PROJECT.

NON-AISC CERTIFIED STEEL FABRICATORS SHALL HAVE FIVE YEARS MINIMUM EXPERIENCE ON SIMILAR PROJECTS OF EQUAL OR LARGER COMPLEXITY AND SCOPE. QUALIFICATIONS SHALL BE SUBMITTED TWO WEEKS PRIOR TO SHOP DRAWING PRODUCTION.

STEEL ERECTORS

ALL STEEL ERECTION SHALL BE PERFORMED BY AN ERECTOR CERTIFIED BY THE AMERICAN INSTITUTE OF STEEL CONSTRUCTION. THE ERECTOR SHALL BE DESIGNATED AN AISC CERTIFIED ERECTOR, CATEGORY CSE AT THE TIME OF BID AND SHALL MAINTAIN THIS CERTIFICATION FOR THE DURATION OF THE PROJECT.

NON-AISC CERTIFIED STEEL ERECTORS SHALL HAVE FIVE YEARS MINIMUM EXPERIENCE ON SIMILAR PROJECTS OF EQUAL OR LARGER COMPLEXITY AND SCOPE. QUALIFICATIONS SHALL BE SUBMITTED TWO WEEKS PRIOR TO SHOP DRAWING PRODUCTION.

STEEL DETAILERS

ALL STEEL DETAILING SHALL BE PERFORMED BY A DETAILER WITH FIVE YEARS MINIMUM EXPERIENCE ON SIMILAR PROJECTS OF EQUAL OR LARGER COMPLEXITY AND SCOPE. QUALIFICATIONS SHALL BE SUBMITTED TWO WEEKS PRIOR TO SHOP DRAWING PRODUCTION.

MATERIAL PROPERTIES

WIDE FLANGE SECTIONS: ASTM A992 (Fy = 50 KSI)

OTHER SHAPES AND PLATES: ASTM A36 (Fy = 36 KSI) TYP. U.N.O.; ASTM A572 (Fy = 50 KSI) WHERE INDICATED

HOLLOW STRUCTURAL SECTIONS: RECTANGULAR & SQUARE - ASTM A500 GRADE C (Fy = 50 KSI) ROUND - ASTM A500 GRADE C (Fy = 46 KSI)

STRUCTURAL STEEL PIPES: ASTM A53, GRADE B, TYPE E OR S (Fy = 35 KSI)

MACHINE BOLTS (M.B.): ASTM A307, GRADE A

HIGH-STRENGTH BOLTS: ASTM F3125, GRADE F1852, UNLESS NOTED OTHERWISE, ASTM F3125, GRADE F2280 WHERE INDICATED

ANCHOR BOLTS (A.B.): ASTM F1554, GRADE 36, UNLESS NOTED OTHERWISE, ASTM F1554, GRADE 105 WHERE INDICATED.

WELDING

SEE ARCH SPECS FOR WELDS EXPOSED TO VIEW.

STRUCTURAL STEEL: WELD IN ACCORDANCE WITH "STRUCTURAL WELDING CODE" AWS D1.1.

LATERAL FORCE-RESISTING SYSTEM: WELD IN ACCORDANCE WITH "STRUCTURAL WELDING CODE SEISMIC SUPPLEMENT" AWS D1.8.

REINFORCING STEEL: WELD IN ACCORDANCE WITH "REINFORCING STEEL WELDING CODE" AWS D1.4. WELD ONLY WITH SPECIFIC APPROVAL OF THE STRUCTURAL ENGINEER. IN NO CASE SHALL A WELD BE MADE WITHIN 6 BAR DIAMETERS OF A "COLD BEND".

CERTIFICATION: ALL WELDING SHALL BE PERFORMED BY WABO/AWS CERTIFIED WELDERS. WELDERS SHALL BE PREQUALIFIED FOR EACH POSITION AND WELD TYPE WHICH THE WELDER WILL BE PERFORMING.

WELD TABS (ALSO KNOWN AS WELD "EXTENSION" TABS OR "RUN OFF" TABS) SHALL BE USED. AFTER THE WELD HAS BEEN COMPLETED THE WELD TABS SHALL BE REMOVED AND THE WELD END GROUND TO A SMOOTH CONTOUR. WELD "DAMS" OR "END DAMS" SHALL NOT BE USED.

THE PROCESS CONSUMABLES FOR ALL WELD FILLER METAL INCLUDING TACK WELDS, ROOT PASS AND SUBSEQUENT PASSES DEPOSITED IN A JOINT SHALL BE COMPATIBLE.

ALL WELD FILLER METAL AND WELD PROCESS SHALL PROVIDE THE TENSILE STRENGTH AND CHARPY V-NOTCH RATINGS AS FOLLOWS:

GRAVITY FRAME

WELD TYPE	FILLER METAL TENSILE STRENGTH	CHARPY V-NOTCH (CVN) RATING
FILLET	70 KSI	-----
PARTIAL PENETRATION	70 KSI	-----
COMPLETE PENETRATION	70 KSI	20 FT-LBS @ 40 DEG F

LATERAL FORCE-RESISTING SYSTEM:

WELD TYPE	FILLER METAL TENSILE STRENGTH	CHARPY V-NOTCH (CVN) RATING
FILLET	70 KSI	20 FT-LBS @ 0 DEG F
PARTIAL PENETRATION	70 KSI	20 FT-LBS @ 0 DEG F
COMPLETE PENETRATION	70 KSI	20 FT-LBS @ 0 DEG F
FILLET (1)	70 KSI	40 FT-LBS @ 70 DEG F
PARTIAL PENETRATION (1)	70 KSI	40 FT-LBS @ 70 DEG F
COMPLETE PENETRATION (1)	70 KSI	40 FT-LBS @ 70 DEG F

(1) DCW LOCATIONS ARE INDICATED IN THE DETAILS.

WELDED CONNECTIONS INSPECTION:

1. ALL WELDING SHALL BE CHECKED BY VISUAL MEANS AND BY OTHER METHODS DEEMED NECESSARY BY THE WELDING INSPECTOR.

2. ALL FULL PENETRATION WELDS TO MEMBERS WHICH FORM A PORTION OF THE LATERAL FORCE-RESISTING SYSTEM SHALL BE CHECKED 100 PERCENT BY ULTRASONIC TESTING.

3. THE CONTRACTOR SHALL SUBMIT A WRITTEN WELDING PROCEDURE SPECIFICATION FOR SHOP AND FIELD WELDING OF ALL LATERAL FORCE-RESISTING SYSTEM CONNECTIONS FOR APPROVAL TO THE STRUCTURAL ENGINEER OF RECORD PRIOR TO FABRICATION.

THE STANDARDS OF ACCEPTANCE FOR WELDS TESTED BY ULTRASONIC METHODS SHALL CONFORM TO AWS D1.1.

ALL WELDS FOUND TO BE DEFECTIVE SHALL BE REPAIRED AND REINSPECTED BY THE SAME METHODS ORIGINALLY USED, AND THIS REPAIR AND REINSPECTION SHALL BE PAID FOR BY THE CONTRACTOR

GENERAL REQUIREMENTS

HIGH-STRENGTH BOLTS: ALL A325 HIGH-STRENGTH BOLTS (HSB) SHALL BE ASTM F3125, GRADE F1852, UNLESS OTHERWISE DESIGNATED AS A490. ALL HSB DESIGNATED AS A490 SHALL BE ASTM F3125, GRADE F2280. ALL HSB SHALL BE BY "LEJEUNE BOLT COMPANY" OR PRE-APPROVED EQUAL AND SHALL BE INSTALLED PER SECTION 8.2 OF THE "SPECIFICATION FOR STRUCTURAL JOINTS USING HIGH STRENGTH BOLTS", AUGUST 2014 BY THE RESEARCH COUNCIL ON STRUCTURAL CONNECTIONS (RCSC SPECIFICATION). ALL BOLT HOLES SHALL BE STANDARD ROUND HOLES UNLESS NOTED OTHERWISE. THE FAYING SURFACES OF ALL PLIES WITHIN THE GRIP OF SLIP-CRITICAL BOLTS (A325SC OR A490SC) SHALL MEET THE REQUIREMENTS FOR A CLASS A SURFACE PER SECTION 3.2 OF THE RCSC SPECIFICATION.

BOLTED CONNECTIONS INSPECTION: CONNECTIONS MADE WITH BEARING TYPE BOLTS SHALL BE INSPECTED PER SECTION 9.1 AND CONNECTIONS MADE WITH SLIP-CRITICAL TYPE BOLTS (A325SC OR A490SC) SHALL BE INSPECTED PER SECTION 9.3 OF RCSC SPECIFICATION.

ADHESIVE ANCHOR RODS: FULLY THREADED ASTM F1554, GRADE 36 UNLESS NOTED OTHERWISE.

HEADED STUDS: SHALL BE "H4L HEADED CONCRETE ANCHORS" FOR STUDS 5/8" DIAMETER AND SMALLER AND "S3L SHEAR CONNECTORS" FOR STUDS 3/4" DIAMETER AND LARGER AS MANUFACTURED BY NELSON STUD WELDING, INC. OR PRE-APPROVED EQUAL AND SHALL CONFORM TO AWS D1.1. ALL HEADED STUDS SHALL BE INSTALLED PER MANUFACTURER'S RECOMMENDATIONS USING A NELSON WELD GUN, UNLESS NOTED OTHERWISE ON DETAILS. ALL WELDS SHALL BE MADE AND INSPECTED IN ACCORDANCE WITH AWS D1.1.

DEFORMED BAR ANCHORS: SHALL BE "D2L DEFORMED BAR ANCHORS" AS MANUFACTURED BY NELSON STUD WELDING, INC. OR PRE-APPROVED EQUAL AND SHALL CONFORM TO AWS D1.1. ALL DEFORMED BAR ANCHORS SHALL BE INSTALLED PER MANUFACTURER'S RECOMMENDATIONS USING A NELSON WELD GUN, UNLESS NOTED OTHERWISE ON DETAILS. ALL WELDS SHALL BE MADE AND INSPECTED IN ACCORDANCE WITH AWS D1.1.

FINISH: STRUCTURAL STEEL SHALL BE PRIMED, UNLESS NOTED OTHERWISE, AND SHALL BE CLEAN OF LOOSE RUST, LOOSE MILL SCALE, OIL, GREASE AND OTHER FOREIGN SUBSTANCES AND SHALL MEET THE REQUIREMENTS OF SSPC-SP3. WHERE STRUCTURAL STEEL IS NOTED TO BE PAINTED, ALL AREAS COMPRISING THE FAYING SURFACES OF BOLTED CONNECTIONS MADE WITH SLIP-CRITICAL TYPE BOLTS (A325SC OR A490SC) SHALL COMPLY WITH THE REQUIREMENTS OF THE RCSC SPECIFICATION. WHERE STRUCTURAL STEEL IS NOTED TO BE GALVANIZED, IT SHALL BE HOT-DIP GALVANIZED IN ACCORDANCE WITH ASTM A123, A384, AND A385. ALL SURFACES WITHIN TWO INCHES OF ANY FIELD WELD LOCATION SHALL BE FREE OF MATERIALS THAT WOULD PREVENT PROPER WELDING OR PRODUCE OBJECTIONABLE FUMES. FIELD TOUCH-UP OF PRIMED, PAINTED, AND GALVANIZED SURFACES SHALL BE PERFORMED TO REPAIR COATING ABRASIONS, AS WELL AS TO PROTECT ALL AREAS AT CONNECTIONS.

CARPENTRY:

NAILS: CONNECTION DESIGNS ARE BASED ON NAILS WITH THE FOLLOWING PROPERTIES:

PENNYWEIGHT	DIAMETER (INCHES)	LENGTH (INCHES)
8d	0.131	2-1/2
10d	0.148	3
16d	0.148	3-1/2
20d	0.192	4

ALL NAILS AND STAPLES SHALL CONFORM TO ASTM F1667 INCLUDING SUPPLEMENT 1. FOR DIAPHRAGM OR SHEAR WALL NAILING THE FOLLOWING FASTENER TYPES MAY BE USED AT EQUIVALENT SPACING TO THAT SPECIFIED ON PLANS.

FASTENER TYPE	DIAMETER (INCHES)	LENGTH (INCHES)	EQUIVALENT SPACING (INCHES)		
8d COMMON WIRE	0.131	2-1/2	6	4	3
8d "DIPPED GALV. BOX"	0.131	2-1/2	6	4	3
8d COOLER	0.113	2-1/2	4-1/2	3	2-1/2
14 GA. STAPLES	0.080	1-1/2"	6	4	3
16 GA. STAPLES	0.062	1-1/2"	4	3	-
10d COMMON WIRE	0.148	3	6	4	3
10d "HOT DIPPED GALV. BOX"	0.148	3	6	4	3
10d "SHINY BOX"	0.131	3	4-1/2	3	2-1/4
16d COMMON WIRE	0.162	3-1/2	6	4	3
16d SINKER NAIL	0.148	3-1/4	5	3-1/4	2-1/2

* BASED ON 15/32" PLYWOOD OR OSB.

WOOD SHEATHING (STRUCTURAL): **SHEATHING ON ROOF SURFACES SHALL BE PLYWOOD ONLY**. SHEATHING ON WALLS SHALL BE PLYWOOD SHEATHING AT FLOOR SHALL BE WARMBOARD SHEATHING PER FLOOR PLAN. PLYWOOD SHEATHING SHALL BE 5-PLY MINIMUM WHERE INDICATED AS PERFORMANCE CATEGORY 3/4" OR THICKER. WOOD SHEATHING SHALL BE "RATED" CONFORMING TO PS1-09 AND/OR PS2-10. ALL PANELS SHALL BEAR THE STAMP OF AN APPROVED GRADING AGENCY. SPAN RATING SHALL BE PROVIDED AS FOLLOWS: ROOF FRAMING AT 32"O.C. (48/24); ROOF FRAMING AT 24"O.C. (32/16); WALLS (32/16); FLOORS (48/24) ALL WOOD SHEATHED WALLS SHALL BE BLOCKED AT ALL PANEL EDGES UNLESS NOTED OTHERWISE.

GLUE-LAMINATED MEMBERS: CONFORM TO ANSI/AITC A190.1. MEMBERS SHALL BE COMBINATION 24F-V4 DOUGLAS FIR (DF) FOR SIMPLE SPANS; AND 24F-V8 DF FOR CANTILEVERED AND/OR CONTINUOUS SPANS (Fb=2400 PSI, Fv=265 PSI, E=1.8X10^6 PSI); AND DF COMBINATION 2 FOR COLUMNS.

PREMIUM APPEARANCE GRADE WHERE EXPOSED TO VIEW; INDUSTRIAL APPEARANCE WHERE NOT EXPOSED TO VIEW. ALL MEMBERS TO HAVE EXTERIOR GLUE AND HAVE AN APPROVED GRADE STAMP. CAMBER AS SHOWN ON STRUCTURAL DRAWINGS.

MEMBERS INDICATED IN STRUCTURAL DRAWINGS AS "POC" SHALL BE PORT ORFORD CEDAR COMBINATION 22F-V/POC1 (Fb=2200 PSI, Fv=265 PSI, E=1.8X10^6 PSI) AND POC COMBINATION 2 FOR COLUMN.

FRAMING LUMBER: STANDARDS. EACH PIECE SHALL BEAR THE GRADE TRADEMARK OF THE WEST COAST LUMBER INSPECTION BUREAU (WCLIB), WESTERN WOOD PRODUCTS ASSOCIATION (WWPA), OR OTHER AGENCY ACCREDITED BY THE AMERICAN LUMBER STANDARD COMMITTEE (ALSC) TO GRADE UNDER ALSC CERTIFIED GRADING RULES. SEE PROJECT SPECIFICATIONS FOR FSC CERTIFICATION REQUIREMENTS.

SPECIES AND GRADE (BASE DESIGN VALUE)

1. 6x BEAMS AND HEADERS. "DOUG FIR-LARCH" NO. 1 (Fb=1350 PSI, Fv=170 PSI)
2. 2x TO 4x JOISTS, PURLINS AND HEADERS. "DOUG FIR-LARCH" NO. 2 (Fb=900 PSI, Fv=180 PSI) OR "HEM-FIR" NO. 1 (Fb=975 PSI, Fv=150 PSI)
3. 6x POSTS AND COLUMNS. "DOUG FIR-LARCH" NO. 1 (Fc=1000 PSI)
4. EXTERIOR STUDS, INTERIOR BEARING WALLS AND 4x COLUMNS. "DOUG FIR-LARCH" NO. 2 (Fb= 900 PSI, Fc=1350 PSI) OR "HEM-FIR" NO. 1 (Fb=975 PSI, Fc=1350 PSI).
5. INTERIOR NON-BEARING STUD WALLS. "DOUG FIR-LARCH" NO. 2 (Fb=900 PSI. Fc=1350 PSI) OR "HEM-FIR" NO. 1 (Fb=975 PSI, Fc=1350 PSI)
6. 2x & 3x T&G DECKING: "DOUG FIR-LARCH" COMMERCIAL (Fb=1450 PSI, E=1700 KSI)
7. THE MINIMUM GRADE OF ALL OTHER STRUCTURAL FRAMING. "DOUG FIR-LARCH" NO. 2 (Fb= 900 PSI, Fc=1350 PSI), OR "HEM-FIR" NO. 1 (Fb=975 PSI, Fc=1350 PSI).
8. UTILITY & STANDARD GRADES NOT PERMITTED.

STRUCTURAL COMPOSITE LUMBER (SCL): SHALL BE MANUFACTURED BY TRUS JOIST, OR PRE-APPROVED EQUAL IN ACCORDANCE WITH APPROVED SHOP AND INSTALLATION DRAWINGS CONFORMING TO A CURRENT EVALUATION REPORT. SEE PROJECT SPECIFICATIONS FOR FSC CERTIFICATION REQUIREMENTS.

MINIMUM DESIGN VALUES:

1. 2x SCL: Fb = 1700 PSI, Fv = 285 PSI, E = 1300 KSI
2. 1-3/4" SCL: Fb = 2600 PSI, Fv = 285 PSI, E = 1800 KSI
3. 3-1/2" SCL: Fb = 2900 PSI, Fv = 285 PSI, E = 2000 KSI
4. 5-1/4" SCL: Fb = 2900 PSI, Fv = 285 PSI, E = 2000 KSI
5. RIMBOARD:APA/EWS PERFORMANCE RATED RIM (PRR-401)

MEMBERS HAVE BEEN DESIGNED TO SERVICEABILITY AND OTHER PERFORMANCE BASED REQUIREMENTS, WHICH MAY EXCEED MINIMUM DESIGN LOADS AND CODE REQUIREMENTS. SUBSTITUTIONS MUST MEET OR EXCEED MOMENT, SHEAR, AND STIFFNESS OF THOSE MEMBERS SPECIFIED AT THE SAME DEPTH AND SPACING.

PRESERVATIVE TREATED WOOD REQUIREMENTS:

TREATMENTS OTHER THAN THOSE LISTED BELOW ARE NOT PERMITTED:

		APPLICATION	SPECIFIED MATERIAL	PRESERVATIVE TREATMENT (1)	CONNECTORS & FASTENERS (2)(3)
EXPOSURE	DRY	FOUNDATION SILL PLATES, TOP PLATES & LEDGERS ON CONCRETE WALLS (4)	2x, 4x, 6x (FIR), OR GLULAM (SP)	SBX	GALV (G60)
				ACQ, CBA, CA	GALV (G185)
	WET	FRAMING, DECKING, POSTS & LEDGERS	2x, & 4x (FIR)	ACQ, CBA, CA	GALV (G185)
			2x, & 4x (CEDAR)	NONE	GALV (G90)
		BEAMS & COLUMNS	6x (FIR), OR GLULAM (SP)	ACQ, CBA, CA	GALV (G185)
			6x OR GLULAM (CEDAR)	NONE	GALV (G90)

1. CCA: CHROMATED COPPER ARSENATE NOT PERMITTED
   SBX: DOT SODIUM BORATE
   ACQ: ALKALINE COPPER QUAT
   CBA & CA: COPPER AZOLE

   FIR: DOUG-FIR OR HEM-FIR
   SP: SOUTHERN PINE

2. CONNECTORS: JOIST HANGERS, STRAPS, FRAMING CONNECTORS, COLUMN CAPS AND BASES, ETC. FASTENERS: MACHINE BOLTS, ANCHOR BOLTS AND LAG SCREWS WITH ASSOCIATED PLATE WASHERS AND NUTS. NAILS, SPIKES, WOOD SCREWS, ETC.

3. G60, G90 & G185 PER ASTM A653 FOR COLD-FORMED STEEL CONNECTORS. BATCH/POST HOT-DIP GALVANIZED PER ASTM A123 FOR CONNECTORS AND ASTM A153 STRUCTURAL STEEL CONNECTORS. HOT-DIP GALVANIZED PER ASTM A153 FOR FASTENERS OR MECHANICALLY GALVANIZED FASTENERS PER ASTM B695, CLASS 55 OR GREATER.

4. AT CONTRACTORS OPTION, LEDGERS AND TOP PLATES A MINIMUM OF 8 FEET ABOVE GRADE ON CONCRETE WALLS MAY BE UN-TREATED IF COMPLETELY SEPARATED FROM THE WALL BY A SELF ADHERING ICE & WATER SHIELD BARRIER (40 MIL MINIMUM).

MILLER HULL
The Miller Hull Partnership, LLP
Architecture and Planning
Polson Building
71 Columbia, Sixth Floor
Seattle, WA 98104

Phone: 206.682.6837
Contact: Name

PCS Structural Solutions
Seattle | Tacoma | Portland
www.pcs-structural.com

STAMP

REVIEWED FOR CODE COMPLIANCE
March 27, 2023
SITE COPY

MERCER ISLAND HOUSE: CASCADE

6838 96TH AVE SE
MERCER ISLAND, WA 98040

SUBMITTAL

100% CONSTRUCTION DOCUMENTS

February 24, 2023

REVISIONS

No.	Description	Date

Drawn: DEH
Checked: TJR
M|H Proj No.: A20.0085.00
Issue Date: February 24, 2023

SHEET

GENERAL NOTES
S003

C:_Revit Models\21201 Mercer Island Residence R2022 (Central)_DEHollar.rvt

CARPENTRY (CONTINUED)

GENERAL REQUIREMENTS: PROVIDE MINIMUM NAILING PER IBC TABLE 2304.10.1 OR MORE, AS OTHERWISE SHOWN. STAGGER ALL NAILING TO PREVENT SPLITTING OF WOOD MEMBERS. ALL WOOD IN CONTACT WITH CONCRETE OR MASONRY SHALL BE PRESERVATIVE TREATED WITH THE EXCEPTION OF INTERIOR CONCRETE TOPPINGS ON WOOD FLOOR SYSTEMS. HOLES AND CUTS IN 3x OR 4x PLATES SHOULD BE TREATED WITH A 9% SOLUTION OF COPPER NAPHTHENATE. BOLT HOLES IN WOOD MEMBERS SHALL BE A MINIMUM OF 1/32" TO A MAXIMUM OF 1/16" LARGER THAN THE BOLT DIAMETER. PROVIDE CUT WASHERS WHERE BOLT HEADS, NUTS AND LAG SCREW HEADS BEAR ON WOOD. PROVIDE A MINIMUM 3"x3"x0.229" PLATE WASHER ON ALL ANCHOR BOLTS WHICH CONNECT MUD SILLS TO FOUNDATION. DO NOT NOTCH OR DRILL STRUCTURAL MEMBERS, EXCEPT AS ALLOWED BY IBC SECTIONS 2308.4.2.4, 2308.5.9, 2308.5.10 AND 2308.7.4 OR AS RESTRICTED BY PLANS OR DETAILS, OR AS APPROVED PRIOR TO INSTALLATION. REFER TO PRESERVATIVE TREATED WOOD REQUIREMENTS IN THESE GENERAL NOTES FOR GALVANIZING REQUIREMENTS FOR CONNECTORS AND FASTENERS.

WOOD SHRINKAGE AND CONSOLIDATION: SHRINKAGE OF WOOD MEMBERS AND CONSOLIDATION OF BEARING WALLS IS EXPECTED FROM TIME OF FRAMING UNTIL AFTER BUILDING IS PUT IN SERVICE. MECHANICAL, ELECTRICAL, AND PLUMBING SYSTEMS SHALL BE CONSTRUCTED TO ACCOMODATE 1/4" OF TOTAL SETTLEMENT PER STORY.

FRAMING CONNECTORS: SHALL CONFORM TO CURRENT EVALUATION REPORT AND BE MANUFACTURED BY SIMPSON STRONG-TIE COMPANY, SAN LEANDRO, CA., OR PRE-APPROVED EQUAL. PROVIDE MAXIMUM SIZE AND QUANTITY OF NAILS OR BOLTS PER MANUFACTURER, EXCEPT AS NOTED OTHERWISE. PROVIDE LEAD HOLES AS REQUIRED TO PREVENT SPLITTING OF WOOD MEMBERS. REFER TO PRESERVATIVE TREATED WOOD REQUIREMENTS IN THESE GENERAL NOTES FOR GALVANIZING REQUIREMENTS FOR CONNECTORS AND FASTENERS.

LAG SCREWS: SHALL CONFORM TO ANSI/ASME STANDARD B18.2.1. LAG SCREWS SHALL BE OF A DIAMETER INDICATED ON DRAWINGS WITH A MINIMUM OF 8x DIA. EMBEDMENT IN SUPPORTING MEMBER UNLESS NOTED OTHERWISE. CLEARANCE HOLE FOR THE SHANK SHALL BE THE SAME DIAMETER AS THE SHANK AND THE SAME DEPTH OF PENETRATION AS THE UNTHREADED PORTION OF THE SHANK. THE LEAD HOLE FOR THE THREADED PORTION SHALL HAVE A DIAMETER EQUAL TO 60 TO 75 PERCENT OF THE SHANK DIAMETER AND A LENGTH EQUAL TO AT LEAST THE LENGTH OF THE THREADED PORTION. THE THREADED PORTION OF THE SCREW SHALL BE INSERTED IN ITS LEAD HOLE BY TURNING WITH A WRENCH. SOAP OR OTHER LUBRICANT SHALL BE USED ON THE SCREWS OR IN THE LEAD HOLE TO FACILITATE INSERTION AND PREVENT DAMAGE TO THE SCREW. LAG SCREWS SHALL NOT BE DRIVEN WITH A HAMMER. REFER TO PRESERVATIVE TREATED WOOD REQUIREMENTS IN THESE GENERAL NOTES FOR GALVANIZING REQUIREMENTS FOR CONNECTORS AND FASTENERS.

I-JOISTS: SHALL BE MANUFACTURED BY TRUS JOIST, OR PRE-APPROVED EQUAL IN ACCORDANCE WITH APPROVED SHOP AND INSTALLATION DRAWINGS. SEE PROJECT SPECIFICATIONS FOR FSC CERTIFICATION REQUIREMENTS. MEMBERS SHALL BE DESIGNED UNDER THE DIRECT SUPERVISION OF A PROFESSIONAL ENGINEER LICENSED IN THE STATE OF PROJECT. THE ENTIRE OPEN-WEB TRUSS/I-JOIST ASSEMBLY SHALL BE AS APPROVED BY CURRENT EVALUATION REPORT. MEMBERS SHALL BE DESIGNED TO CARRY THE LOADS LISTED IN THE DESIGN CRITERION AND ANY ADDITIONAL LOADS INDICATED ON THE FRAMING PLANS AND DETAILS. THE TRUSS ENGINEER SHALL ASSUME ALL RESPONSIBILITY FOR THE WORK OF ALL SUBORDINATES INVOLVED IN THE PREPARATION OF THE TRUSS PLACEMENT PLANS AND TRUSS DESIGN DRAWINGS. TRUSSES/I-JOISTS SHALL BE PROVIDED TO COMPLETE THE ROOF AND/OR FLOOR FRAMING FROM THE SHEATHING TO THE SUPPORTING MEMBERS BELOW. MEMBER DESIGNATIONS ON PLANS ARE FOR TYPICAL UNIFORMLY LOADED CONDITIONS. MANUFACTURER SHALL PROVIDE ADDITIONAL MEMBERS AS REQUIRED TO SUPPORT SPECIAL LOADING CONDITIONS INDICATED ON DRAWINGS. TOP CHORD AT STRAP CONNECTIONS TO CONCRETE OR MASONRY WALLS SHALL BE COMPOSED OF A STRUCTURAL COMPOSITE LUMBER MEMBER APPROVED BY A CURRENT EVALUATION REPORT FOR SUCH A USE OR AT CONTRACTORS OPTION, STRAP NAIL HOLES SHALL BE PRE-DRILLED IN CHORD. PROVIDE SHOP AND INSTALLATION DRAWINGS AND CALCULATIONS PRODUCED UNDER THE SUPERVISION OF AND BE STAMPED BY A PROFESSIONAL ENGINEER LICENSED IN THE STATE OF PROJECT. DETAIL DRAWINGS TO INDICATE MEMBER TYPES, SIZE, SPACING, BRIDGING, BLOCKING, CONNECTIONS, ANCHORING, BEARING PLATE AND OTHER PERTINENT DETAILS. PROVIDE 1 1/2" DIA. OPEN KNOCKOUTS AT 12" O.C. ON ALL ROOF I-JOISTS.

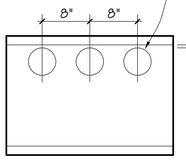

4-5/8" DIA. HOLES CENTERED IN PANELS AT 8" O.C. - (3) HOLES AT 32" O.C. JOISTS, (2) HOLES AT 24" O.C. JOISTS

1/2" MIN. CLR TO TOP CHORD

TYPICAL I-JOIST VENTED BLOCKING
NO SCALE

MEMBER DESIGN CALCULATIONS SHALL BE PROVIDED FOR STANDARD LOADING ALONG WITH DESIGN CHECKS FOR SPECIAL LOADING CONDITIONS WHICH INCLUDE FREE BODY DIAGRAMS, LOADING BREAK DOWN, DESCRIPTION OF LOADS (I.E. MECH UNIT, SUSPENDED WALL, ETC.) AND THE RATIONALE FOR LOADING DISTRIBUTION ON MULTIPLE MEMBERS. SUBMITTAL SHALL ALSO PROVIDE ANY DOCUMENTATION NECESSARY TO INTERPRET DATA INDICATED ON CALCULATIONS.

MEMBERS HAVE BEEN DESIGNED TO MEET SERVICEABILITY AND OTHER PERFORMANCE BASED REQUIREMENTS, WHICH MAY EXCEED MINIMUM DESIGN LOADS AND CODE REQUIREMENTS. SUBSTITUTIONS MUST MEET OR EXCEED MOMENT, SHEAR, AND STIFFNESS OF THOSE MEMBERS SPECIFIED AT THE SAME DEPTH AND SPACING.

REFER TO THE FRAMING CONNECTORS SECTION OF THESE GENERAL NOTES FOR REQUIREMENTS PLACED UPON CONNECTOR HARDWARE SPECIFIED BY TRUSS ENGINEER AND/OR PROVIDED BY TRUSS MANUFACTURER.

SPRINKLER LINE ATTACHMENTS SHALL CONFORM TO NFPA 13 AND COMMERCIAL PUBLICATION "SPRINKLER SYSTEM INSTALLATION WITH GUIDELINES FOR REDBUILT OPEN-WEB TRUSSES AND I-JOISTS". LOADS HUNG FROM JOIST NOT SPECIFICALLY IDENTIFIED ON STRUCTURAL DRAWINGS SHALL NOT EXCEED 30 POUNDS AT ANY ONE POINT, NOR SHALL TOTAL LOADS IN POUNDS ON ANY ONE JOIST EXCEED 8 TIMES THE JOIST SPAN IN FEET, UNLESS DETAILED OTHERWISE ON THE DRAWINGS. ATTACHMENT OF LOADS EXCEEDING 90 POUNDS SHALL BE APPROVED PRIOR TO INSTALLATION. DO NOT NOTCH OR DRILL THRU TRUSS MEMBERS.

MISCELLANEOUS:

PRE-APPROVED SUBSTITUTIONS: SUBSTITUTIONS MAY BE ALLOWED ONLY IF THEY MEET THE REQUIREMENTS OF THESE GENERAL NOTES AND THE SPECIFICATIONS, AND IF COMPLETE WRITTEN ENGINEERING DATA FOR EACH CONDITION REQUIRED FOR THIS PROJECT IS PROVIDED TO THE STRUCTURAL ENGINEER TWO WEEKS PRIOR TO BID DATE AND APPROVED IN WRITTEN ADDENDA BY THE ARCHITECT. DATA IS TO INDICATE CODE BASIS BY YEAR, AUTHORITY FOR STRESSES AND STRESS INCREASES, IF ANY, AND AMOUNT OF EXPECTED DEFLECTION FOR FLEXURAL MEMBERS UNDER (1) TOTAL LOAD AND (2) LIVE LOAD ONLY. ALL INCREASED COSTS IN MECHANICAL, SPRINKLER, ELECTRICAL OR GENERAL INSTALLATION AND ANY ARCHITECTURAL OR STRUCTURAL REDESIGN RESULTING FROM SUBSTITUTION SHALL BE BORNE BY THE GENERAL CONTRACTOR.

SHOP DRAWINGS/SUBMITTALS

THE FOLLOWING SHOP DRAWINGS/SUBMITTALS SHALL BE PROVIDED FOR REVIEW AND APPROVAL BY THE STRUCTURAL ENGINEER PRIOR TO FABRICATION OR DELIVERY.

		STRUCTURAL ENGR.	BLDG. DEPT.
1.	CONCRETE MIX DESIGNS	X	X
2.	REINFORCING STEEL SHOP DRAWINGS	X	
3.	STRUCTURAL STEEL	X	X
4.	MISCELLANEOUS STEEL	X	X
5.	GLU-LAMINATED MEMBERS	X	X
6.	STRUCTURAL COMPOSITE LUMBER	X	X
7.	WOOD I-JOISTS	X	X
8.	CONDUIT EMBEDDED IN CONCRETE	X	X
9.	CONTRACTOR'S STATEMENT OF RESPONSIBILITY	X	X

DEFERRED SUBMITTALS

THE FOLLOWING ARE NOT INCLUDED WITH THE BUILDING PERMIT DRAWINGS AND SHALL BE SUBMITTED TO THE BUILDING DEPARTMENT AND THE STRUCTURAL ENGINEER FOR REVIEW AND APPROVAL AS A DEFERRED SUBMITTAL. SUBMITTALS SHALL BE STAMPED BY AN ENGINEER LICENSED IN THE STATE OF THE PROJECT AS NOTED.

		ENGINEER STAMP REQUIRED
1.	WOOD I-JOISTS	PE
2.	CURTAIN WALL	SE
3.	FALL RESTRAINTS	PE

SPECIAL INSPECTION: SPECIAL INSPECTION SHALL BE PROVIDED BY AN INDEPENDENT TESTING LABORATORY PER THE REQUIREMENTS OF IBC CHAPTER 17 AND THE LOCAL BUILDING OFFICIAL OR APPLICABLE JURISDICTION AND THE CONTRACT DOCUMENTS. THE SPECIAL INSPECTOR SHALL SUBMIT INSPECTION REPORTS AND A FINAL SIGNED REPORT TO THE BUILDING OFFICIAL FOR THE ITEMS LISTED IN THE QUALITY ASSURANCE/SPECIAL INSPECTION SECTION:

STATEMENT OF SPECIAL INSPECTIONS:

SPECIAL INSPECTION: SPECIAL INSPECTION SHALL BE PROVIDED PER THE REQUIREMENTS OF IBC SECTION 1704 AND 1705 AND AS NOTED HEREIN.

STRUCTURAL SYSTEM	VERIFICATION AND INSPECTION	CONTINUOUS	PERIODIC	COMMENTS	REFERENCES
SOILS	VERIFY MATERIALS BELOW SHALLOW FOUNDATIONS ARE ADEQUATE TO ACHIEVE THE DESIGN BEARING CAPACITY		X		IBC 1705.6
	VERIFY EXCAVATIONS ARE EXTENDED TO PROPER DEPTH AND HAVE REACHED PROPER MATERIAL		X		
	PERFORM CLASSIFICATION AND TESTING OF COMPACTED FILL MATERIALS		X		
	VERIFY USE OF PROPER MATERIALS, DENSITIES AND LIFT THICKNESSES DURING PLACEMENT AND COMPACTION OF COMPACTED FILL	X			
	PRIOR TO PLACEMENT OF COMPACTED FILL, INSPECT SUBGRADE AND VERIFY THAT SITE HAS BEEN PREPARED PROPERLY		X		
SOLDIER PILE WALLS	GEOTECHNICAL ENGINEER TO MONITOR CONSTRUCTION & REVIEW MOVEMENT READINGS	1 X			
STEEL CONSTRUCTION	MATERIAL VERIFICATION OF HIGH-STRENGTH BOLTS, NUTS AND WASHERS		X		AISC 360 CHAPTER N5
	HIGH-STRENGTH BOLTING A. SNUG-TIGHT JOINTS B. PRETENSIONED AND SLIP-CRITICAL JOINTS USING TURN-OF-NUT WITH MATCHMARKING, TWIST OFF BOLTS OR DIRECT TENSION INDICATOR METHODS OF INSTALLATION		 X X		 AISC 360 CHAPTER N5 AISC 341 CHAPTER J7
	MATERIAL VERIFICATION OF STRUCTURAL STEEL A. FOR STRUCTURAL STEEL, IDENTIFICATION MARKINGS TO CONFORM TO AISC 360 B. MANUFACTURER'S CERTIFIED MILL TEST REPORTS		 X X	MANUFACTURER TO PROVIDE CERTIFIED MILL TEST REPORTS	AISC 360 CHAPTER N5 AISC 341 CHAPTER J6
	MATERIAL VERIFICATION OF WELD FILLER MATERIALS A. IDENTIFICATION MARKINGS TO CONFORM TO AWS SPECIFICATIONS LISTED IN GENERAL NOTES B. MANUFACTURER'S CERTIFICATE OF COMPLIANCE		 X X	MANUFACTURER TO PROVIDE CERTIFICATE OF COMPLIANCE	AISC 360 CHAPTER N5
	INSPECTION OF WELDING A. COMPLETE AND PARTIAL JOINT PENETRATION GROOVE WELDS B. MULTI-PASS FILLET WELDS C. SINGLE-PASS FILLET WELDS > 5/16" D. PLUG AND SLOT WELDS E. SINGLE-PASS FILLET WELDS ≤ 5/16" F. FIELD-INSTALLED WELDED STUDS G. WELDING OF STAIRS AND RAILING SYSTEMS	 X X X X	 X X X	SPECIAL INSPECTIONS IN THIS SECTION ARE WAIVED WHERE FABRICATION IS PERFORMED ON THE PREMISES OF A FABRICATOR REGISTERED AND APPROVED IN ACCORDANCE WITH IBC SECTION 1704.2.5	AISC 360 CHAPTER N5 AISC 341 CHAPTER J6 AWS D1.1
	INSPECTION OF LATERAL FORCE-RESISTING SYSTEM CONNECTIONS FOR COMPLIANCE WITH APPROVED CONSTRUCTION DOCUMENTS		X		
STEEL CONSTRUCTION OTHER THAN STRUCTURAL STEEL	INSPECTION OF WELDING A. COLD-FORM STEEL DECK WELDS B. REINFORCING STEEL: 1. VERIFICATION OF WELDABILITY OF REINFORCING STEEL OTHER THAN ASTM A 706 2. REINFORCING STEEL IN MOMENT FRAMES AND BOUNDARY ELEMENTS 3. SHEAR REINFORCEMENT 4. OTHER REINFORCING STEEL 5. OPEN WEB STEEL JOISTS & JOIST GIRDERS A. END CONNECTIONS - WELDING OR BOLTED B. BRIDGING - HORIZONTAL OR DIAGONAL 1. STANDARD BRIDGING 2. BRIDGING THAT DIFFERS FROM THE SJI SPECIFICATIONS LISTED IN SECTION 2207.1	 X X X X	 X X X X X		AWS D1.3 AWS D1.4 ACI 318:26.6.4 IBC 1705.2.3 SJI SPECIFICATIONS LISTED IN SECTION 2207.1 SJI SPECIFICATIONS LISTED IN SECTION 2207.1
STEEL PIPE PILES	GEOTECHNICAL ENGINEER TO MONITOR INSTALLATION AND LOAD TESTING.	X			

1

MILLER HULL
The Miller Hull Partnership, LLP
Architecture and Planning
Polson Building
71 Columbia, Sixth Floor
Seattle, WA 98104

Phone: 206.682.6837
Contact: Name

PCS Structural Solutions
Seattle | Tacoma | Portland
www.pcs-structural.com

STAMP

MERCER ISLAND HOUSE: CASCADE

6838 96TH AVE SE
MERCER ISLAND, WA 98040

SUBMITTAL

100% CONSTRUCTION DOCUMENTS

February 24, 2023

REVISIONS

No.	Description	Date
1	BUILDING PERMIT RESUBMITTAL	10/27/22

Drawn: DEH
Checked: TJR
M|H Proj No.: A20.0085.00

Issue Date: February 24, 2023

SHEET

GENERAL NOTES
S004

C:_Revit Models\21201 Mercer Island Residence R2022 (Central)_DEHollar.rvt

STRUCTURAL SYSTEM	VERIFICATION AND INSPECTION	CONTINUOUS	PERIODIC	COMMENTS	REFERENCES
CONCRETE	REINFORCING STEEL AND PLACEMENT		X	SPECIAL INSPECTIONS NOT REQUIRED FOR THE FOLLOWING CONDITIONS:	ACI 318: CH 20, 25.2, 25.3, 26.6-1 TO 26.6-3, IBC 1908.4
	ANCHORS CAST IN CONCRETE-PRIOR TO AND DURING PLACEMENT OF CONCRETE		X	NON-STRUCTURAL SLAB ON GRADE	ACI 318: 17.8.2 AISC 360 SECTION N7
	ANCHORS POST-INSTALLED IN HARDENED CONCRETE (MECHANICAL ANCHORS INSTALLED IN ANY DIRECTION AND ADHESIVE ANCHORS INSTALLED DOWNWARD)		X	PERIODIC INSPECTION TO INCLUDE A QUANTITY OF 10% WITH A MINIMUM OF (5) ANCHORS INSPECTED PER INSTALLER ON A DAILY BASIS.	ACI 318: 17.8.2 MFR EVAL REPORT MFR PUBLISHED INSTALLATION INSTRUCTIONS
	ANCHORS POST-INSTALLED IN HARDENED CONCRETE (ADHESIVE ANCHORS INSTALLED HORIZONTAL OR UPWARDLY INCLINED)	X			ACI 318: 17.8.2 MFR EVAL REPORT MFR PUBLISHED INSTALLATION INSTRUCTIONS
	VERIFY USE OF REQUIRED DESIGN MIX		X		ACI 318, CH 19
	PRIOR TO CONCRETE AND SHOTCRETE PLACEMENT, FABRICATE SPECIMENS FOR STRENGTH TESTS, PERFORM SLUMP AND AIR CONTENT TESTS, AND DETERMINE THE TEMPERATURE OF THE CONCRETE	X			ASTM C172, C31 ACI 318: 26.4, 26.12 IBC 1908.10
	CONCRETE AND SHOTCRETE PLACEMENT FOR PROPER APPLICATION	X			ACI 318: 26.5 IBC 1908.6, 1908.7, 1908.8
	MAINTENANCE OF SPECIFIED CURING TEMPERATURE AND TECHNIQUES		X		ACI 318: 26.5.3 TO 26.5.5 IBC 1908.9
	VERIFICATION OF IN-SITU CONCRETE STRENGTH PRIOR TO REMOVAL OF SHORES AND FORMS FROM BEAMS AND STRUCTURAL SLABS		X		ACI 318: 26.11.2
	INSPECT FORMWORK FOR SHAPE, LOCATION AND DIMENSIONS OF THE CONCRETE MEMBER BEING FORMED		X		ACI 318: 26.11.1.2(b)
	MATERIAL VERIFICATION OF REINFORCEMENT STEEL FOR ASTM A615 REINFORCING		X	MANUFACTURER SHALL PROVIDE MILL TEST REPORTS. CONTINUOUS INSPECTION FOR ALL WELDS GREATER THAN 5/16" FILLET. PERIODIC INSPECTION FOR FILLET WELD 5/16" AND SMALLER	ACI 318: 26.6.4 AWS D1.4 IBC 1705.3.1
	TESTING OF MATERIALS		X		IBC 1705.3.2
WOOD FRAMING	SHEAR WALL NAILING		X	SPECIAL INSPECTION NOT REQUIRED FOR FASTENER SPACING > 4" O.C.	IBC 1705.11.1, 1705.12.2, 1705.5
	DIAPHRAGM NAILING		X	SPECIAL INSPECTION NOT REQUIRED FOR FASTENER SPACING > 4" O.C.	IBC 1705.11.1, 1705.12.2, 1705.5
	NAILING, BOLTING, AND ANCHORAGE OF COMPONENTS THAT ARE PART OF DRAG STRUTS, BRACES AND HOLD-DOWNS THAT ARE PART OF THE SEISMIC RESISTING SYSTEM		X		IBC 1705.11.1, 1705.12.2
CLADDING, AND NON-BEARING WALLS	ERECTION AND FASTENING		X	NOT REQUIRED FOR STRUCTURES ≤ 30 FT OR CLADDING OR VENEER ≤ 5 PSF OR INTERIOR NON-BEARING WALLS ≤ 15 PSF	IBC 1705.12.5
ELECTRICAL EQUIPMENT	ANCHORAGE OF EQUIPMENT TO STRUCTURE		X	SPECIAL INSPECTION ONLY REQUIRED IN SEISMIC DESIGN CATEGORY E OR F	IBC 1705.12.5.6
MECHANICAL AND ELECTRICAL SYSTEMS	MINIMUM CLEARANCE TO SPRINKLER PIPING OF 3"		X		IBC 1705.12.6

TESTING AND SPECIAL INSPECTION REPORTS SHALL BE PREPARED FOR EACH INSPECTION ITEM ON A DAILY BASIS WHENEVER WORK IS PERFORMED ON THAT ITEM. REPORTS SHALL BE DISTRIBUTED TO OWNER, CONTRACTOR, BUILDING OFFICIAL, ARCHITECT AND STRUCTURAL ENGINEER OF RECORD.

STRUCTURAL OBSERVATIONS SHALL BE PERFORMED BY THE STRUCTURAL ENGINEER OF RECORD OR DESIGNATED REPRESENTATIVE IN ACCORDANCE WITH IBC 1704.6. STRUCTURAL OBSERVATION SHALL BE PERFORMED AS FOLLOWS:

- SITE OBSERVATIONS WILL BE PERFORMED EVERY 6-8 WEEKS - OR SOONER AS THE PROJECT SCHEDULE MAY DICTATE - FOR THE FOLLOWING (BUT NOT LIMITED TO):
  - PRIOR TO CONCRETE FOUNDATION POUR
  - PRIOR TO CONCRETE WALL POUR
  - UPON SIGNIFICANT COMPLETION OF LOAD-BEARING WALL FRAMING
  - COVERED WALKWAY:
    - INSPECTION/VERIFICATION OF CONCEALED HARDWARE FOR BEAM AND GIRDER CONNECTIONS INCLUDING THE ROD BRACING ANCHORING.
    - SIMPSON CBH HARDWARE INSTANCES.
    - KERF PLATES AT BASE AND ELEVATED WALK PATH.
  - MAIN HOUSE (SEPARATED FROM GARAGE & SHED):
    - CANTILEVER FOUNDATIONS AT GRID 6 FOR GENERAL CONFORMANCE FOR DESIGN INCLUDING REBAR, PILE LOCATIONS, AND GENERAL WIDTHS AND DEPTHS VERIFICATION OF WALL AND FOOTING.
    - SIMPSON CBH HARDWARE INSTANCES.
    - PRIOR FLOOR SHEATHING, REVIEW OF MAIN GIRDERS (GLULAM AND WIDE FLANGE BEAMS) AT LEVEL 2 AND ROOF FRAMING, OF HARDWARE TO JOISTS OR COLUMNS.
- REVIEW OF TESTING AND INSPECTION REPORTS.
- REPORTS SHALL BE PREPARED FOR EACH SITE VISIT AND SHALL BE DISTRIBUTED TO ARCHITECT.

GENERAL CONTRACTOR SHALL SUBMIT A WRITTEN CONTRACTOR'S STATEMENT OF RESPONSIBILITY TO THE BUILDING OFFICIAL AND OWNER PRIOR TO COMMENCEMENT OF WORK. THE CONTRACTOR'S STATEMENT OF RESPONSIBILITY SHALL INCLUDE ACKNOWLEDGMENT OF AWARENESS OF THE SPECIAL INSPECTION REQUIREMENTS CONTAINED IN THE STATEMENT OF SPECIAL INSPECTION.

1

C:_Revit Models\21201 Mercer Island Residence R2022 (Central)_DEHollar.rvt

ABBREVIATION LIST			
@	AT	HDR	HEADER
A.B.	ANCHOR BOLT	HGR	HANGER
ADD'L	ADDITIONAL	HORIZ.	HORIZONTAL
A.F.F.	ABOVE FINISH FLOOR	HSS	HOLLOW STRUCTURAL SECTION
ALT.	ALTERNATE	HT	HEIGHT
ARCH.	ARCHITECTURAL	INT.	INTERIOR
BLD'G	BUILDING	JST	JOIST
BLK'G	BLOCKING	JT	JOINT
BM	BEAM	L	ANGLE
B.O.F.	BOTTOM OF FOOTING	L.F.R.S.	LATERAL FORCE-RESISTING SYSTEM
BOT.	BOTTOM	L.L.	LIVE LOAD
BRB	BUCKLING RESTRAINED BRACE	LLH	LONG LEG HORIZONTAL
BRG	BEARING	LLV	LONG LEG VERTICAL
BTWN	BETWEEN	LOC.	LOCATION
B.U.	BUILT UP	LSL	LAMINATED STRAND LUMBER
(C=)	CAMBER	LVL	LAMINATED VENEER LUMBER
CANT.	CANTILEVER	MAX.	MAXIMUM
CFS	COLD-FORMED STEEL	M.B.	MACHINE BOLT
C.J.	CONTROL/CONSTRUCTION JOINT	MECH.	MECHANICAL
℄	CENTERLINE	MEZZ.	MEZZANINE
CLR.	CLEARANCE	MFR	MANUFACTURER
CMU	CONCRETE MASONRY UNIT	MIN.	MINIMUM
COL.	COLUMN	MISC.	MISCELLANEOUS
CONC.	CONCRETE	MTL	METAL
CONN.	CONNECTION	N.F.	NEAR FACE
CONST.	CONSTRUCTION	N.S.	NEAR SIDE
CONT.	CONTINUOUS	NTS	NOT TO SCALE
CONTR.	CONTRACTOR	O.C.	ON CENTER
COORD.	COORDINATE	OPN'G	OPENING
C.P.	COMPLETE PENETRATION	OPP.	OPPOSITE
CTR'D	CENTERED	P.A.F.	POWDER ACTUATED FASTENER
C.Y.	CUBIC YARD	PERP.	PERPENDICULAR
DBL.	DOUBLE	ℙL	PLATE
DCW	DEMAND CRITICAL WELD	P.P.	PARTIAL PENETRATION
D.F.	DOUGLAS FIR	P.P.T.	PRESERVATIVE PRESSURE TREATED
DIA. OR ϕ	DIAMETER	P.S.F.	POUNDS PER SQUARE FOOT
DIAG.	DIAGONAL	PSL	PARALLAM
DIM.	DIMENSION	P.T.	POST TENSION
D.L.	DEAD LOAD	PW.	PLYWOOD
DWG	DRAWING	REINF.	REINFORCEMENT
DWL	DOWEL	REQ'D	REQUIRED
(E)	EXISTING	SCHED.	SCHEDULE
EA.	EACH	SCL	STRUCTURAL COMPOSITE LUMBER
E.F.	EACH FACE	SHT'G	SHEATHING
EL.	ELEVATION	SIM.	SIMILAR
ELEV.	ELEVATOR	S.O.G.	SLAB ON GRADE
ENGR	ENGINEER	SQ.	SQUARE
EQ.	EQUAL	STD	STANDARD
E.W.	EACH WAY	STIFF.	STIFFENER
EXP.	EXPANSION	STL	STEEL
EXT.	EXTERIOR	STRUCT.	STRUCTURAL
FDN	FOUNDATION	T&B	TOP & BOTTOM
F.F.	FAR FACE	T&G	TONGUE AND GROOVE
FLR	FLOOR	THR'D	THREADED
F.O.M.	FACE OF MASONRY	T.O.F.	TOP OF FOOTING
F.O.S.	FACE OF STUD	T.O.S.	TOP OF STEEL
FRM'G	FRAMING	TRT'D	TREATED
F.R.T.	FIRE RETARDANT TREATED	TYP.	TYPICAL
F.S.	FAR SIDE	U.N.O.	UNLESS NOTED OTHERWISE
FTG	FOOTING	U.T.	ULTRASONIC TESTED
GA.	GAGE/GAUGE	VERT.	VERTICAL
GALV.	GALVANIZED	W/	WITH
GL.	GLULAM	W.P.	WORK POINT
GR.	GRADE	WT	WEIGHT
GWB	GYPSUM WALL BOARD	W.W.R.	WELDED WIRE REINFORCING

MILLER HULL
The Miller Hull Partnership, LLP
Architecture and Planning
Polson Building
71 Columbia, Sixth Floor
Seattle, WA 98104

Phone: 206.682.6837
Contact: Name

PCS Structural Solutions
Seattle | Tacoma | Portland
www.pcs-structural.com

STAMP

REVIEWED FOR CODE COMPLIANCE
March 27, 2023
SITE COPY

MERCER ISLAND HOUSE: CASCADE

6838 96TH AVE SE
MERCER ISLAND, WA 98040

SUBMITTAL

100% CONSTRUCTION DOCUMENTS

February 24, 2023

REVISIONS

No.	Description	Date
1	BUILDING PERMIT RESUBMITTAL	10/27/22

Drawn: DEH
Checked: TJR
M|H Proj No.: A20.0085.00

Issue Date: February 24, 2023

SHEET

GENERAL NOTES
S005

FOUNDATION NOTES

1. COORDINATE ALL DIMENSIONS WITH ARCHITECTURAL DRAWINGS.
2. TOP OF SLAB = 26.00' UNLESS NOTED OTHERWISE.
3. TOP OF FOOTING ELEVATIONS = 25.00' UNLESS NOTED OTHERWISE ON PLANS AND DETAILS.
4. INDICATES 10" CONCRETE WALL UNLESS NOTED OTHERWISE.
5. "F_" INDICATES CONCRETE PILE CAPS. FOR SCHEDULE - SEE 2/S300.
6. HSS5x5x3/8 INDICATES STEEL COLUMNS ORIGINATING AT FOUNDATION LEVEL. ALL COLUMNS ARE CONTINUOUS TO ROOF UNLESS NOTED OTHERWISE. FOR TYPICAL ANCHOR ROD/BOLT DETAIL - SEE 1/S300.
7. FOR TYPICAL FOUNDATION DETAILS - SEE SHEETS S302, S303, AND S304.
8. FOR TYPICAL STEPS IN FOOTING, PLACEMENT OF CONCRETE WALL REINFORCEMENT, AND FOUNDATION CONSTRUCTION JOINTS - SEE DETAILS 1/S302, 4/S302, AND 7/S302.
9. FOR TYPICAL CONCRETE SLAB-ON-GRADE DETAILS - SEE SHEET S301.
10. INDICATES GRADE BEAM SUPPORTED BY 4" DIAMETER STANDARD PIPE AT 6'-0" ON CENTER UNLESS NOTED OTHERWISE. FOR GRADE BEAM SCHEDULE - SEE 1/S304.
11. INDICATES DEPRESSED OR SLOPED SLABS. FOR SLOPE AND EXACT LOCATION - SEE ARCHITECTURAL DRAWINGS. SEE 5/S301 FOR TYPICAL SLAB STEP OR DEPRESSION DETAIL.
12. P INDICATES STEEL PIN PILE - SEE PILE PLAN FOR PILE SCHEDULE.
13. FOR HOUSEKEEPING PADS SEE MECHANICAL/ELECTRICAL. FOR TYPICAL REINFORCING DETAIL FOR PADS - SEE 7/S301.

FLOOR FRAMING NOTES

1. COORDINATE ALL DIMENSIONS WITH ARCHITECTURAL DRAWINGS. TOP OF SHEATHING = 37.50' AT 2ND FLOOR, 48.50' AT 3RD FLOOR AND 47.36' AT ROOF DECK ABOVE GRADE UNLESS NOTED OTHERWISE.
2. INDICATES 2x6 WOOD STUD WALL. WOOD STUDS SHOULD ALIGN WITH JOIST LAYOUT WHERE THEY SHARE THE SAME LAYOUT AND BE SPACED AT 16" ON CENTER MAXIMUM UNLESS NOTED OTHERWISE. PROVIDE 1/2" WOOD SHEATHING AT ALL EXTERIOR WALLS NAILED WITH 10d AT 6" ON CENTER AT ALL PANEL EDGES (PROVIDE 2x BLOCKING AT UNSUPPORTED PANEL EDGES) AND 10d AT 12" ON CENTER AT INTERMEDIATE FRAMING TYPICAL UNLESS NOTED OTHERWISE - SEE NOTE #9 FOR ADDITIONAL SHEAR WALL NAILING.
3. INDICATES WALL EXTENDING TO FLOOR STRUCTURE.
4. INDICATES TYPICAL HEADER IN WALL BELOW - SEE 1/S701.
5. "(C=_)" INDICATES CAMBER FOR GLULAM BEAMS. C=0" UNLESS NOTED OTHERWISE.
6. HSS5x5x3/8 INDICATES HOLLOW STRUCTURAL SECTION COLUMNS ORIGINATING AT FLOOR LEVEL.
7. HSS INDICATES TYPE OF CONTINUOUS COLUMN FROM LEVEL BELOW AND CONTINUOUS ON TO LEVEL ABOVE.
8. BU COL. INDICATES WOOD STUD BUILT-UP COLUMN - SEE 2/S701 FOR TYPICAL DETAIL.
9. [ ] INDICATES SPECIAL BUILT-UP WOOD STUD COLUMN REQUIREMENTS UNDER HEADER. FOR TYPICAL FRAMING REQUIREMENTS AT OPENING IN STRUCTURAL WALLS - SEE 1/S701 FOR TYPICAL DETAIL.
10. X OR X INDICATES SPECIAL WOOD STUD WALL TYPE - SEE 4/S701 FOR SCHEDULE.
11. + INDICATES HOLDOWN - SEE 1/S703 FOR SCHEDULE.
12. INDICATES PENETRATION IN FLOOR STRUCTURE.
13. PROVIDE 3/4" TONGUE AND GROOVE WOOD OR 1-1/8" WARMBOARD SHEATHING OVER ENTIRE FLOOR STRUCTURE. NAIL WOOD FLOOR SHEATHING WITH 10d AT 6" ON CENTER AT ALL SUPPORTED PANEL EDGES AND 10d AT 10" ON CENTER AT INTERMEDIATE FRAMING. TYPICAL UNLESS NOTED OTHERWISE. NAIL PER 3/S701.
14. FOR SUPPORT OF MISCELLANEOUS MECHANICAL EQUIPMENT AND PIPES FROM FLOOR STRUCTURE - SEE 1/S704.
15. FOR TYPICAL STEEL CONNECTION DETAILS - SEE SHEET S501.

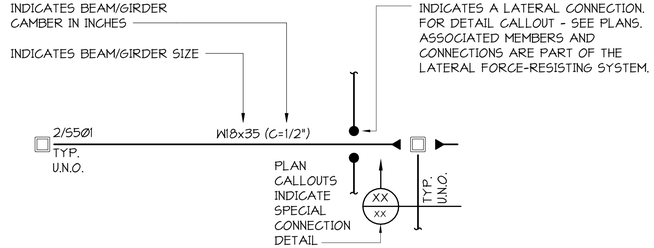

16. SEE MECHANICAL FOR OPENINGS IN FLOOR AND PROVIDE FRAMING AROUND OPENINGS PER 3/S701. SEE ARCHITECTURAL FOR ADDITIONAL INFORMATION INCLUDING PERIMETER WALL FRAMING.
17. X1 H INDICATES ALLOWABLE PENETRATION THROUGH FLOOR FRAMING PER DETAIL 8/S701. ADDITIONAL LOCATIONS TO BE COORDINATED BY GENERAL CONTRACTOR. CONFIRM SIZE AND LOCATIONS OF I-JOIST PENETRATIONS WITH I-JOIST MANUFACTURER.

ROOF FRAMING NOTES

1. COORDINATE ALL DIMENSIONS WITH ARCHITECTURAL DRAWINGS.
2. INDICATES WALL EXTENDING TO ROOF STRUCTURE.
3. INDICATES TYPICAL HEADER IN WALL BELOW - SEE 1/S701.
4. INDICATES PENETRATION IN ROOF STRUCTURE.
5. "(C=_")" INDICATES CAMBER FOR GLULAM BEAMS. C=0" UNLESS NOTED OTHERWISE.
6. PROVIDE 3/4" TONGUE AND GROOVE WOOD SHEATHING OVER ENTIRE ROOF STRUCTURE. NAIL SHEATHING WITH 10d AT 6" ON CENTER AT ALL SUPPORTED PANEL EDGES AND 10d AT 10" ON CENTER AT INTERMEDIATE FRAMING. TYPICAL UNLESS NOTED OTHERWISE.
7. X1 H INDICATES ALLOWABLE PENETRATION THROUGH FLOOR FRAMING PER DETAIL 8/S701. ADDITIONAL LOCATIONS TO BE COORDINATED BY GENERAL CONTRACTOR. CONFIRM SIZE AND LOCATIONS OF I-JOIST PENETRATIONS WITH I-JOIST MANUFACTURER.

MILLER HULL
The Miller Hull Partnership, LLP
Architecture and Planning
Polson Building
71 Columbia, Sixth Floor
Seattle, WA 98104
Phone: 206.682.6837
Contact: Name

PCS Structural Solutions
Seattle | Tacoma | Portland
www.pcs-structural.com

STAMP

MERCER ISLAND HOUSE: CASCADE

6838 96TH AVE SE
MERCER ISLAND, WA 98040

SUBMITTAL

100% CONSTRUCTION DOCUMENTS

February 24, 2023

REVISIONS

No.	Description	Date

Drawn: DEH
Checked: TJR
M|H Proj No.: A20.0085.00
Issue Date: February 24, 2023

SHEET

PLAN NOTES
S110

C:_Revit Models\21201 Mercer Island Residence R2022 (Central)_DEHollar.rvt

PILE SCHEDULE		
MARK	SIZE	EMBEDMENT DEPTH
P1	PIPE4STD	NOTE 3
P2	PIPE6STD	NOTE 3

NOTES:

1. SITE RETAINING WALL PILES NOT SHOWN ON PLAN.
2. SEE S151 AND CIVIL DRAWINGS FOR SITE WALL EXTENTS AND 6/S304 FOR STRUCTURAL DETAILS AND PILE LAYOUT. 1
3. EMBED A MIN. OF 3 FT INTO THE PRE-OLYMPIA NONGLACIAL DEPOSITS OR MIN. DEPTH NEEDED TO ACHIEVE THE ACCEPTANCE CRITERIA, WHICHEVER IS DEEPER.

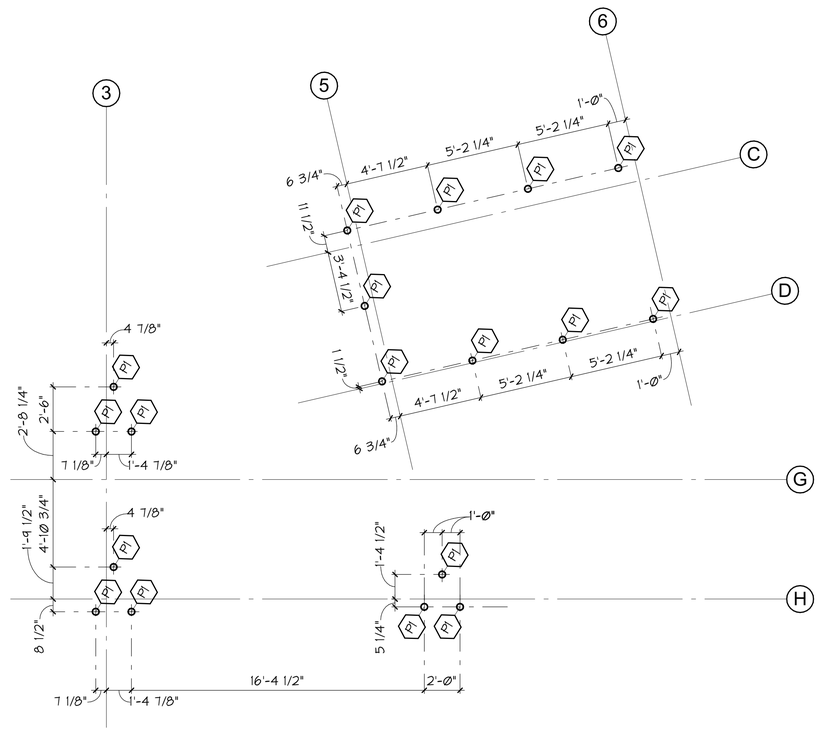

2 S111a LEVEL 2 - FOUNDATION PILE PLAN
1/4" = 1'-0"

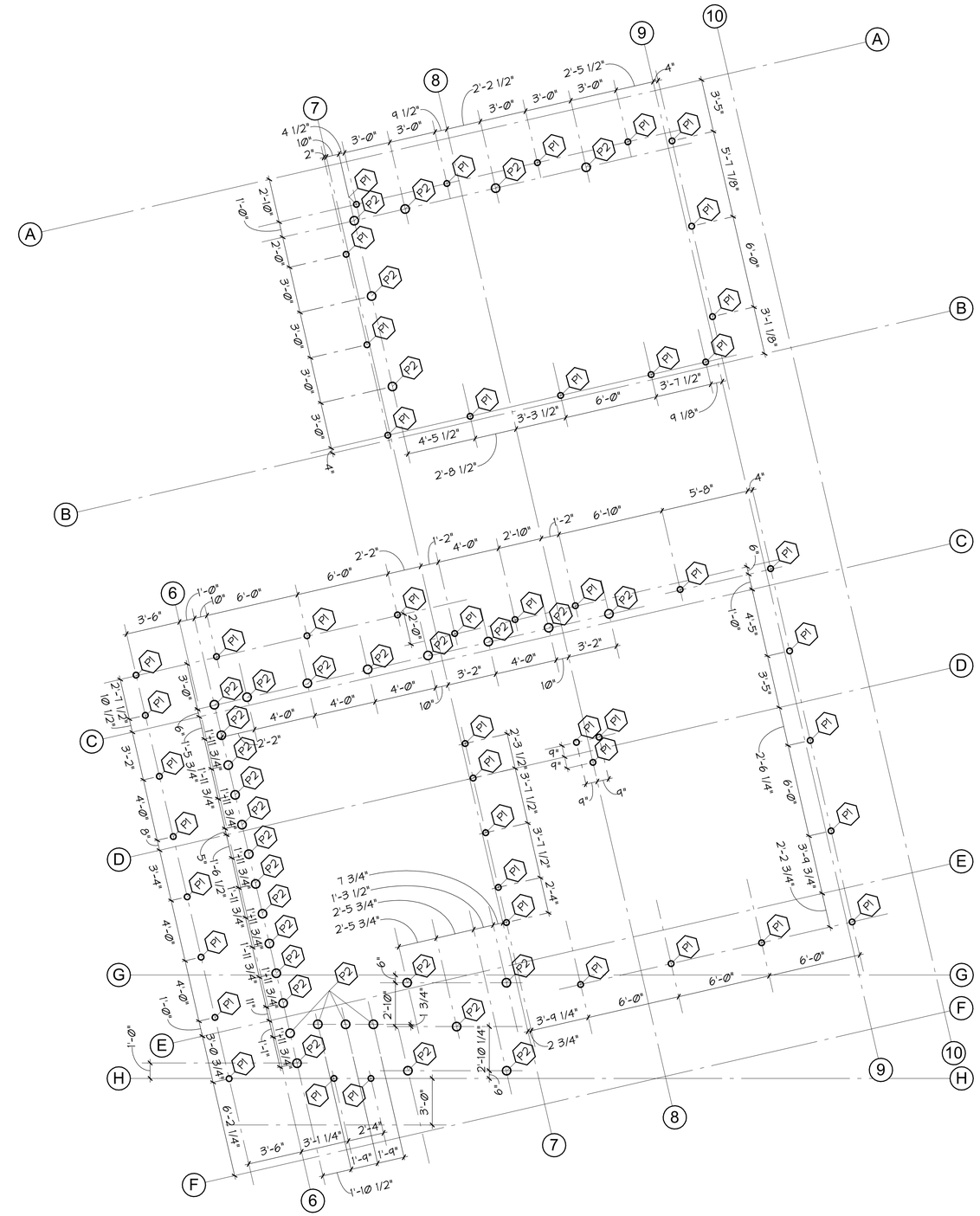

1 S111a LEVEL 1 - FOUNDATION PILE PLAN
1/4" = 1'-0"

MILLER HULL
The Miller Hull Partnership, LLP
Architecture and Planning
Polson Building
71 Columbia, Sixth Floor
Seattle, WA 98104

Phone: 206.682.6837
Contact: Name

PCS Structural Solutions
Seattle | Tacoma | Portland
www.pcs-structural.com

STAMP

REVIEWED FOR CODE COMPLIANCE
March 27, 2023
SITE COPY

MERCER ISLAND HOUSE: CASCADE

6838 96TH AVE SE
MERCER ISLAND, WA 98040

SUBMITTAL

100% CONSTRUCTION DOCUMENTS

February 24, 2023

REVISIONS

No.	Description	Date
1	BUILDING PERMIT RESUBMITTAL	10/27/22

Drawn: SMS
Checked: TJR
M|H Proj No.: A20.0085.00

Issue Date: February 24, 2023

SHEET

PILE PLAN
S111a

C:_Revit Models\21201 Mercer Island Residence R2022 (Central)_DEHollar.rvt
2/22/2023 4:14:34 PM

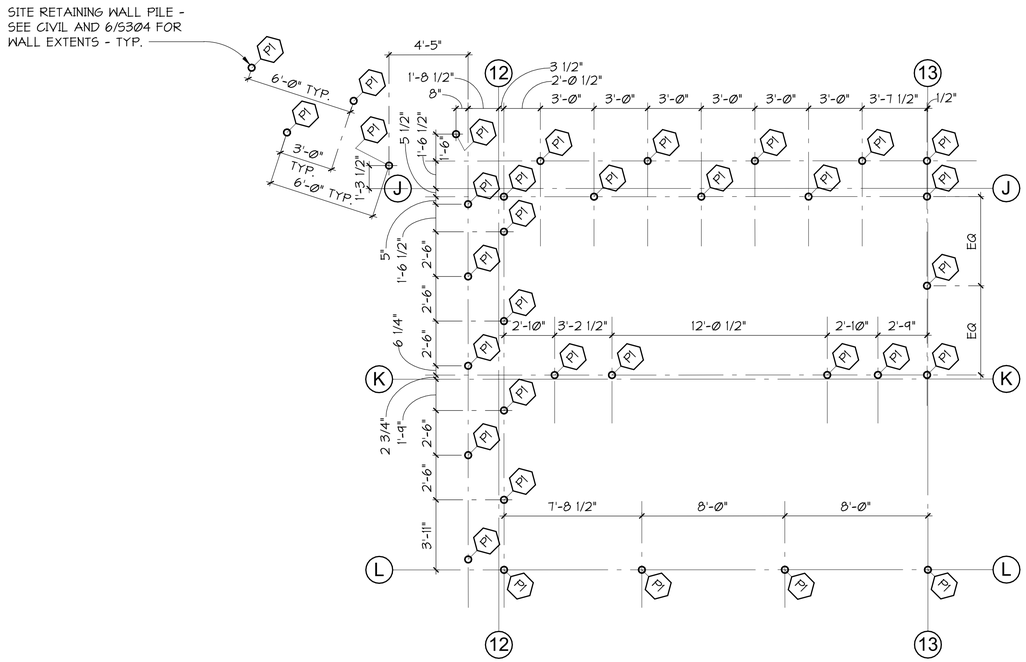

1 S111b GARAGE - FOUNDATION PILE PLAN

1/4" = 1'-0"

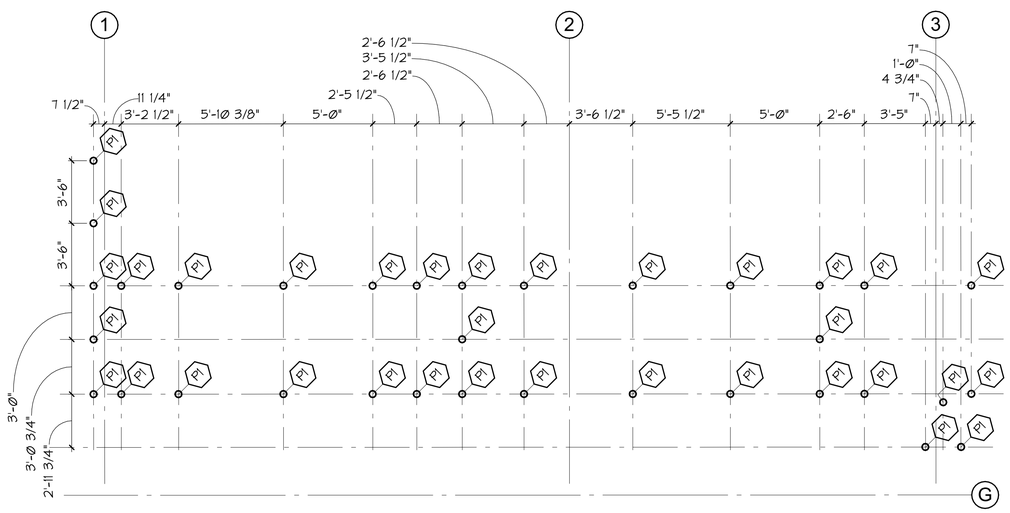

2 S111b COVERED WALKWAY - FOUNDATION PILE PLAN

1/4" = 1'-0"

MILLER HULL

The Miller Hull Partnership, LLP
Architecture and Planning
Polson Building
71 Columbia, Sixth Floor
Seattle, WA 98104

Phone: 206.682.6837
Contact: Name

PCS Structural Solutions
Seattle | Tacoma | Portland
www.pcs-structural.com

STAMP

REVIEWED FOR CODE COMPLIANCE
March 27, 2023
SITE COPY

MERCER ISLAND HOUSE: CASCADE

6838 96TH AVE SE
MERCER ISLAND, WA 98040

SUBMITTAL

100% CONSTRUCTION DOCUMENTS

February 24, 2023

REVISIONS

No.	Description	Date

Drawn: Author
Checked: Checker
M|H Proj No.: A20.0085.00

Issue Date: February 24, 2023

SHEET

PILE PLAN
S111b

C:_Revit Models\21201 Mercer Island Residence R2022 (Central)_DEHollar.rvt

2/22/2023 4:14:37 PM

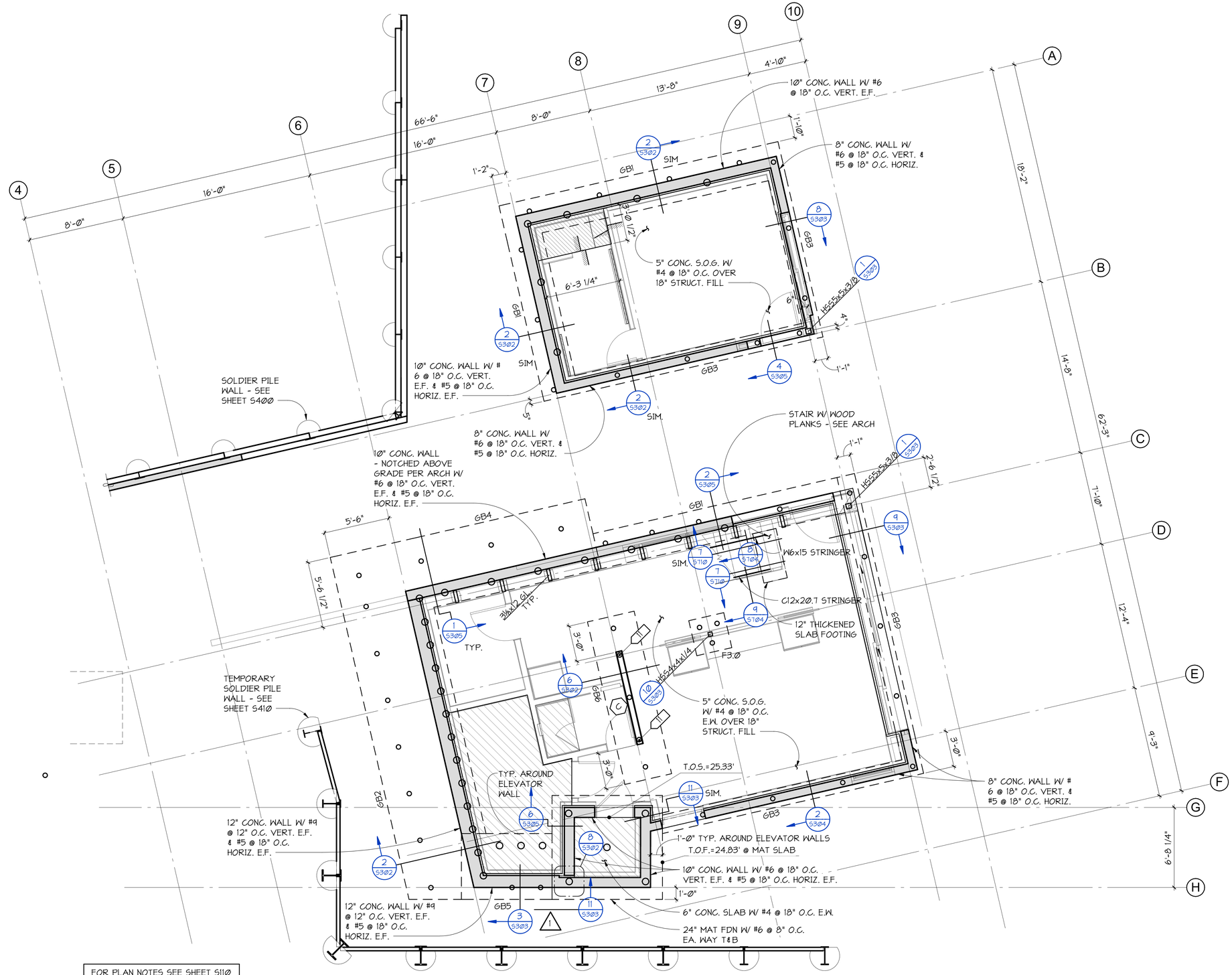

FOR PLAN NOTES SEE SHEET S110

1 S112 LEVEL 1 - FOUNDATION PLAN

1/4" = 1'-0"

C:_Revit Models\21201 Mercer Island Residence R2022 (Central)_DEHollar.rvt

MILLER HULL

The Miller Hull Partnership, LLP
Architecture and Planning
Polson Building
71 Columbia, Sixth Floor
Seattle, WA 98104

Phone: 206.682.6837
Contact: Name

PCS Structural Solutions
Seattle | Tacoma | Portland
www.pcs-structural.com

STAMP

REVIEWED FOR CODE COMPLIANCE
March 27, 2023
SITE COPY

MERCER ISLAND HOUSE: CASCADE

6838 96TH AVE SE
MERCER ISLAND, WA 98040

SUBMITTAL

100% CONSTRUCTION DOCUMENTS

February 24, 2023

REVISIONS

No.	Description	Date
1	BUILDING PERMIT RESUBMITTAL	10/27/22

Drawn: DEH
Checked: TJR
M|H Proj No.: A20.0085.00

Issue Date: February 24, 2023

SHEET

LEVEL 1 - FOUNDATION PLAN

S112

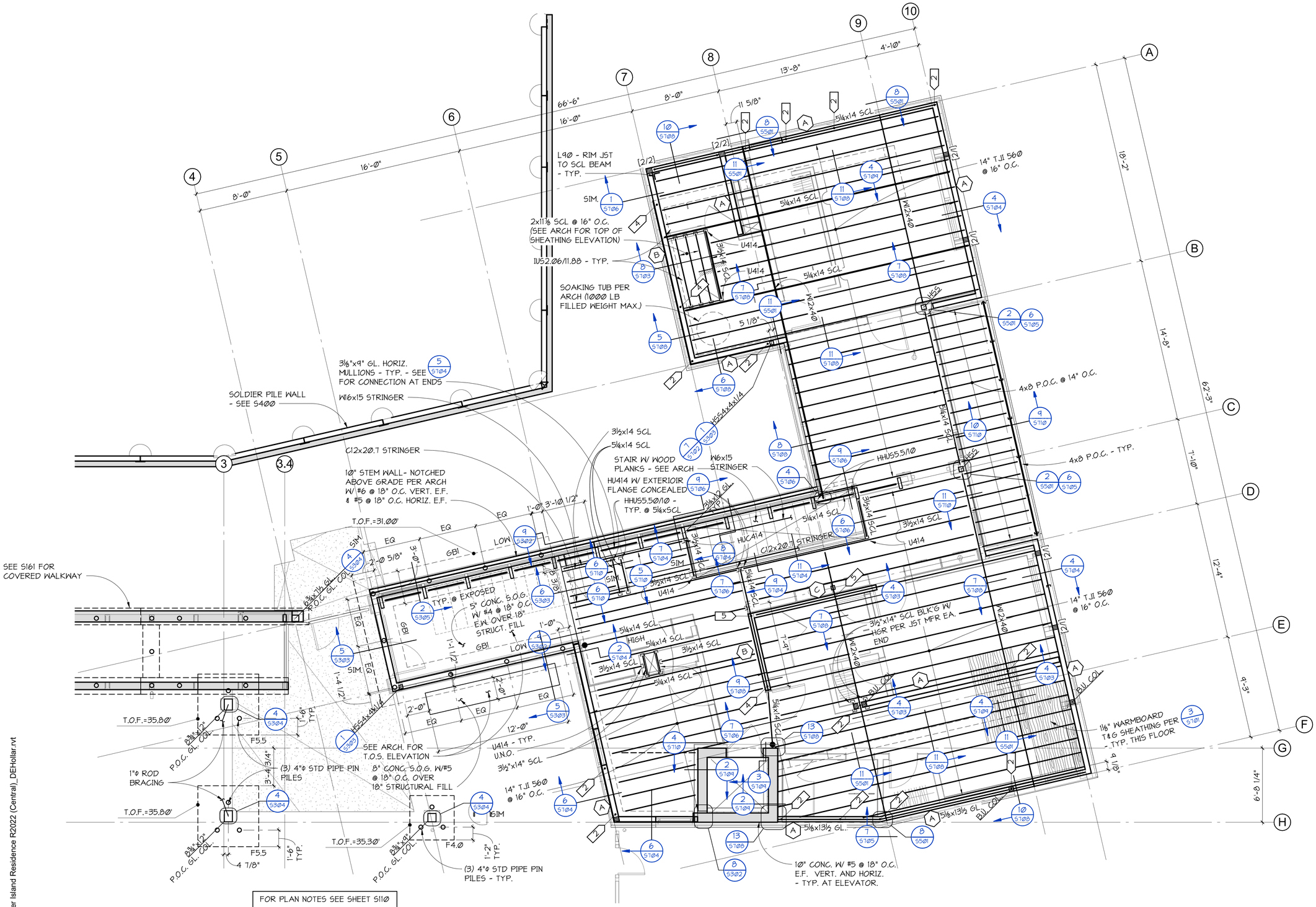

C:_Revit Models\21201 Mercer Island Residence R2022 (Central)_DEHollar.rvt

MILLER HULL

The Miller Hull Partnership, LLP
Architecture and Planning
Polson Building
71 Columbia, Sixth Floor
Seattle, WA 98104

Phone: 206.682.6837
Contact: Name

PCS Structural Solutions
Seattle | Tacoma | Portland
www.pcs-structural.com

STAMP

REVIEWED FOR CODE COMPLIANCE
March 27, 2023
SITE COPY

MERCER ISLAND HOUSE: CASCADE

6838 96TH AVE SE
MERCER ISLAND, WA 98040

SUBMITTAL

100% CONSTRUCTION DOCUMENTS

February 24, 2023

REVISIONS

No.	Description	Date

Drawn: DEH
Checked: TJR
M|H Proj No.: A20.0085.00

Issue Date: February 24, 2023

SHEET

LEVEL 2 - FLOOR FRAMING PLAN

S121

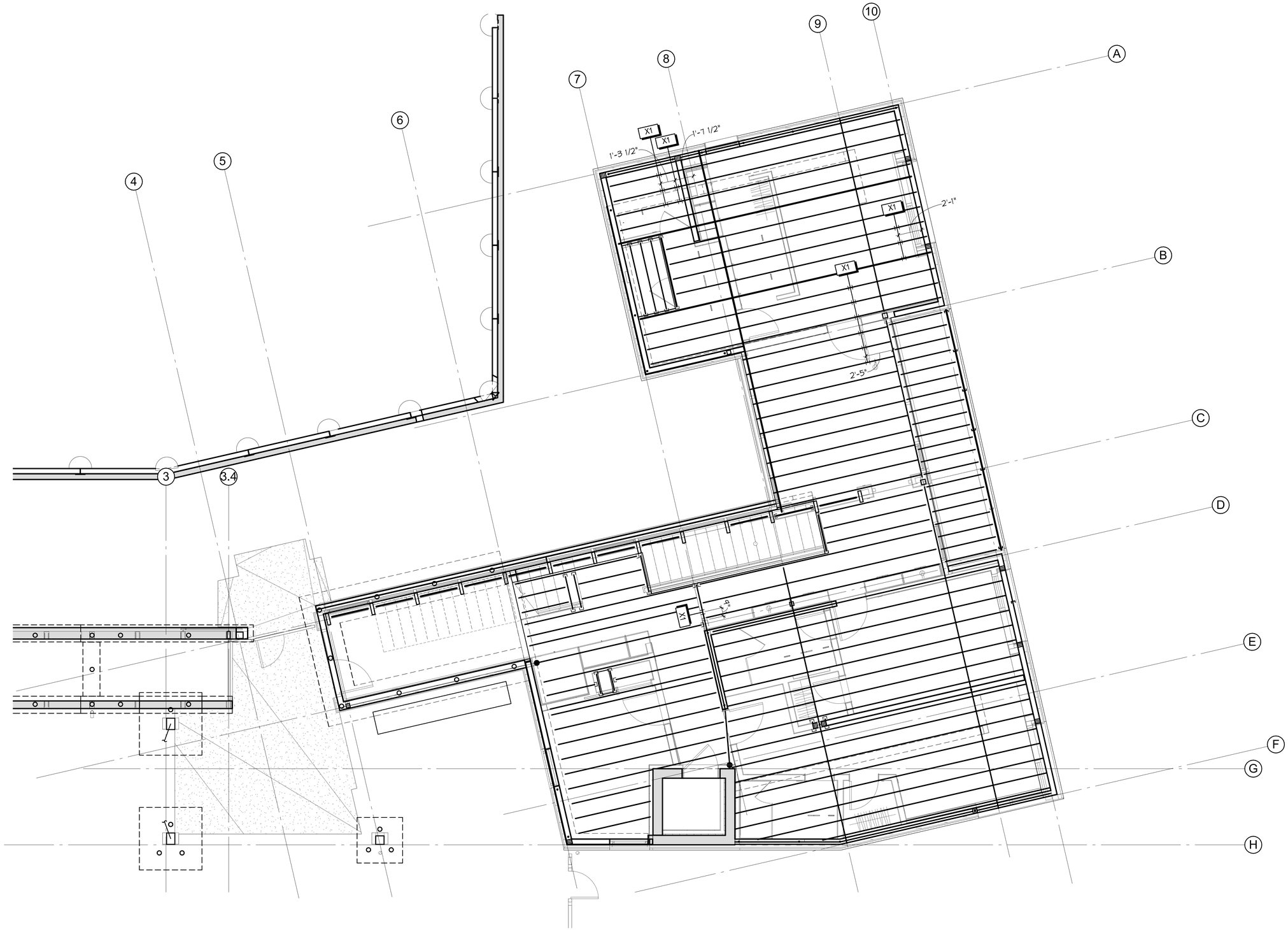

1 S121P LEVEL 2 - FLOOR FRAMING PENETRATION PLAN
1/4" = 1'-0"

C:_Revit Models\21201 Mercer Island Residence R2022 (Central)_DEHollar.rvt

MILLER HULL

The Miller Hull Partnership, LLP
Architecture and Planning
Polson Building
71 Columbia, Sixth Floor
Seattle, WA 98104

Phone: 206.682.6837
Contact: Name

PCS Structural Solutions
Seattle | Tacoma | Portland
www.pcs-structural.com

STAMP

REVIEWED FOR CODE COMPLIANCE
March 27, 2023
SITE COPY

MERCER ISLAND HOUSE: CASCADE

6838 96TH AVE SE
MERCER ISLAND, WA 98040

SUBMITTAL

100% CONSTRUCTION DOCUMENTS

February 24, 2023

REVISIONS

No.	Description	Date

Drawn: Author
Checked: Checker
M|H Proj No.: A20.0085.00

Issue Date: February 24, 2023

SHEET

LEVEL 2 - FLOOR FRAMING PENETRATION PLAN

S121P

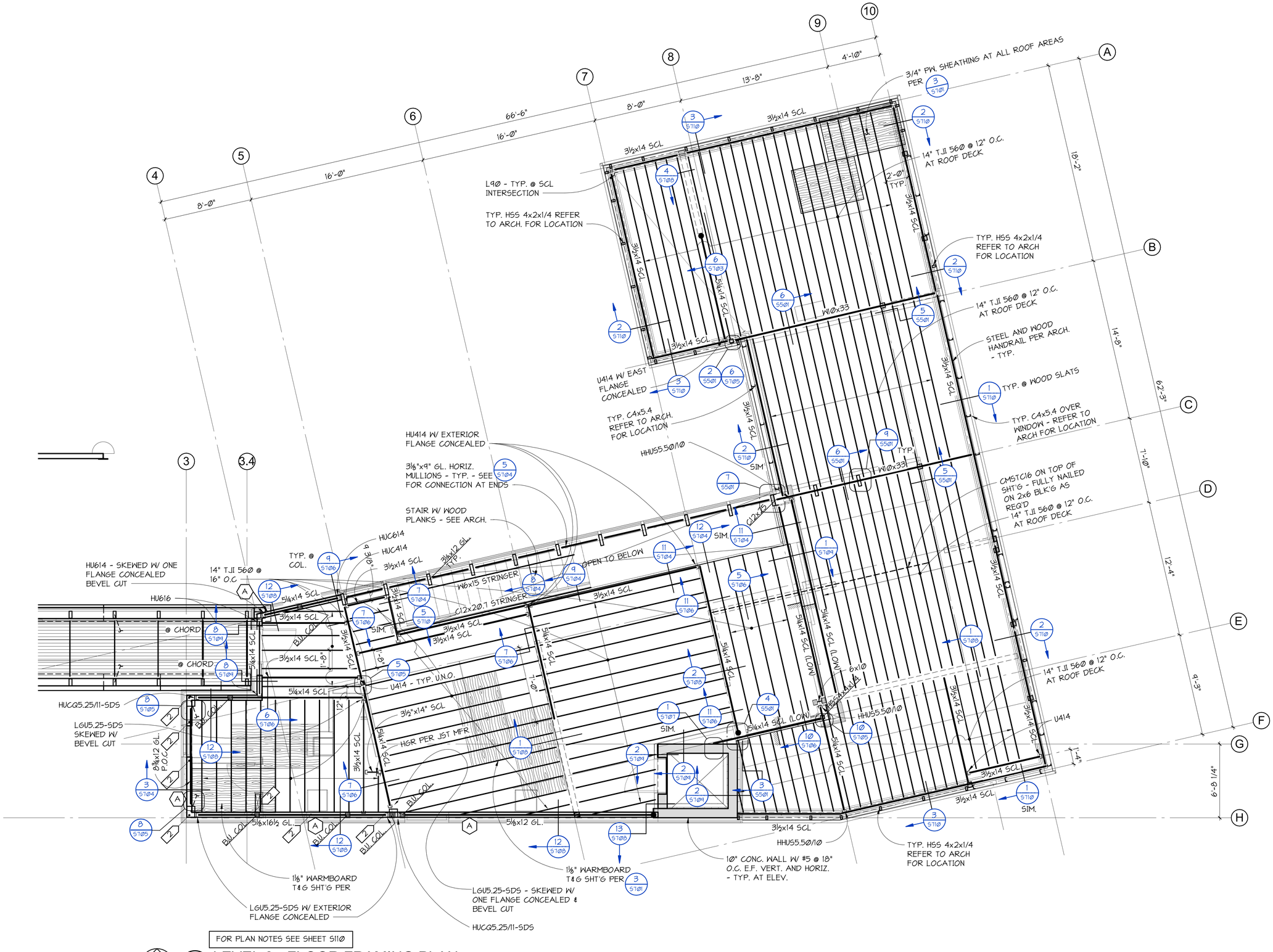

1 S131 LEVEL 3 - FLOOR FRAMING PLAN
1/4" = 1'-0"

C:_Revit Models\21201 Mercer Island Residence R2022 (Central)_DEHollar.rvt

MILLER HULL
The Miller Hull Partnership, LLP
Architecture and Planning
Polson Building
71 Columbia, Sixth Floor
Seattle, WA 98104
Phone: 206.682.6837
Contact: Name

PCS Structural Solutions
Seattle | Tacoma | Portland
www.pcs-structural.com

STAMP

REVIEWED FOR CODE COMPLIANCE
March 27, 2023
SITE COPY

MERCER ISLAND HOUSE: CASCADE

6838 96TH AVE SE
MERCER ISLAND, WA 98040

SUBMITTAL

100% CONSTRUCTION DOCUMENTS

February 24, 2023

REVISIONS

No.	Description	Date

Drawn: DEH
Checked: TJR
M|H Proj No.: A20.0085.00
Issue Date: February 24, 2023

SHEET

LEVEL 3 - FLOOR FRAMING PLAN
S131

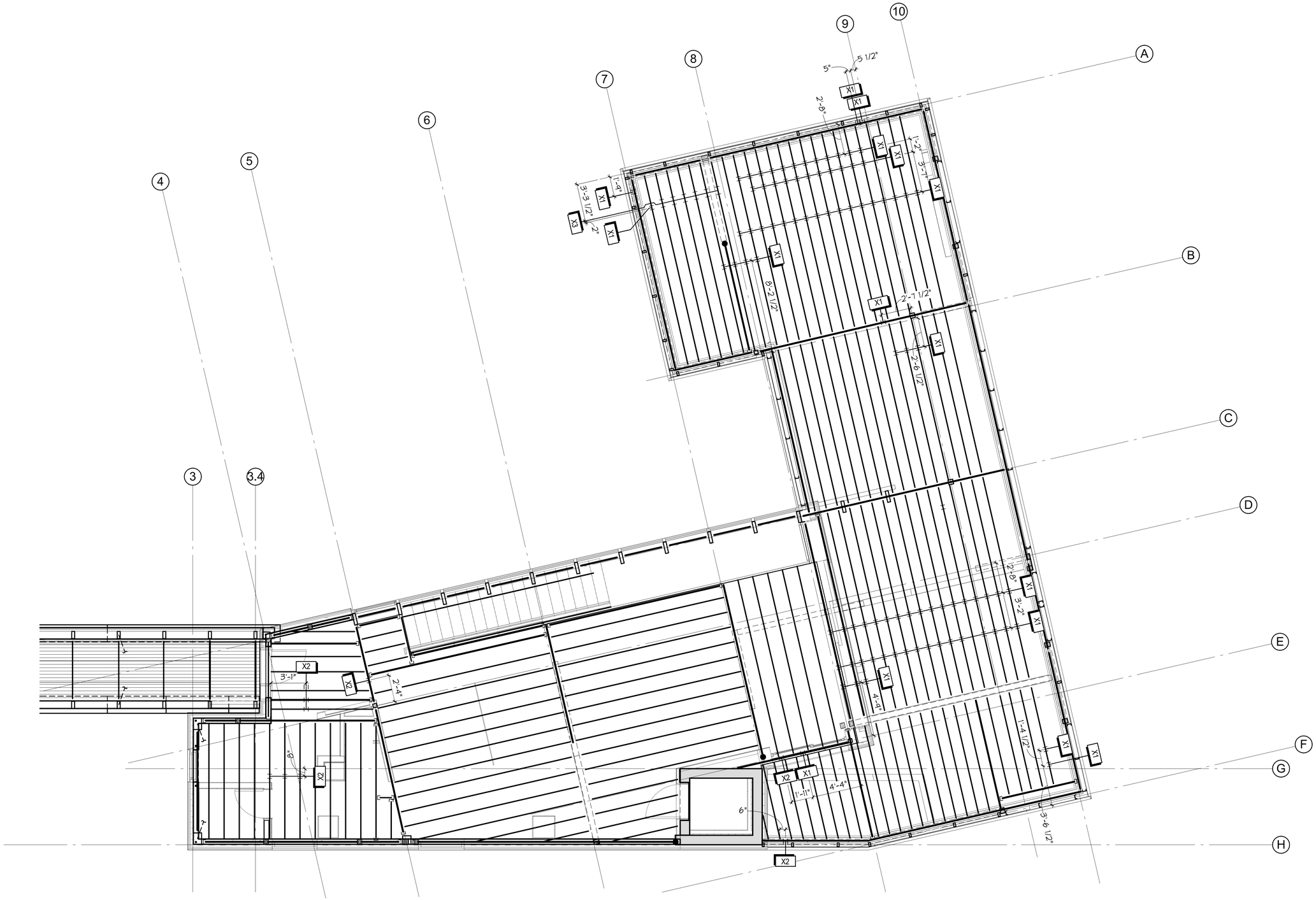

1 S131P LEVEL 3 - FLOOR FRAMING PENETRATION PLAN

1/4" = 1'-0"

C:_Revit Models\21201 Mercer Island Residence R2022 (Central)_DEHollar.rvt

MILLER HULL

The Miller Hull Partnership, LLP
Architecture and Planning
Polson Building
71 Columbia, Sixth Floor
Seattle, WA 98104

Phone: 206.682.6837
Contact: Name

PCS Structural Solutions
Seattle | Tacoma | Portland
www.pcs-structural.com

STAMP

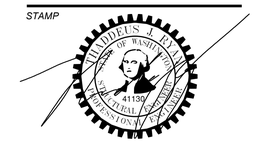

MERCER ISLAND HOUSE: CASCADE

6838 96TH AVE SE
MERCER ISLAND, WA 98040

SUBMITTAL

100% CONSTRUCTION DOCUMENTS

February 24, 2023

REVISIONS

No.	Description	Date

Drawn: DEH
Checked: TJR
M|H Proj No.: A20.0085.00

Issue Date: February 24, 2023

SHEET

LEVEL 3 - FLOOR FRAMING PENETRATION PLAN

S131P

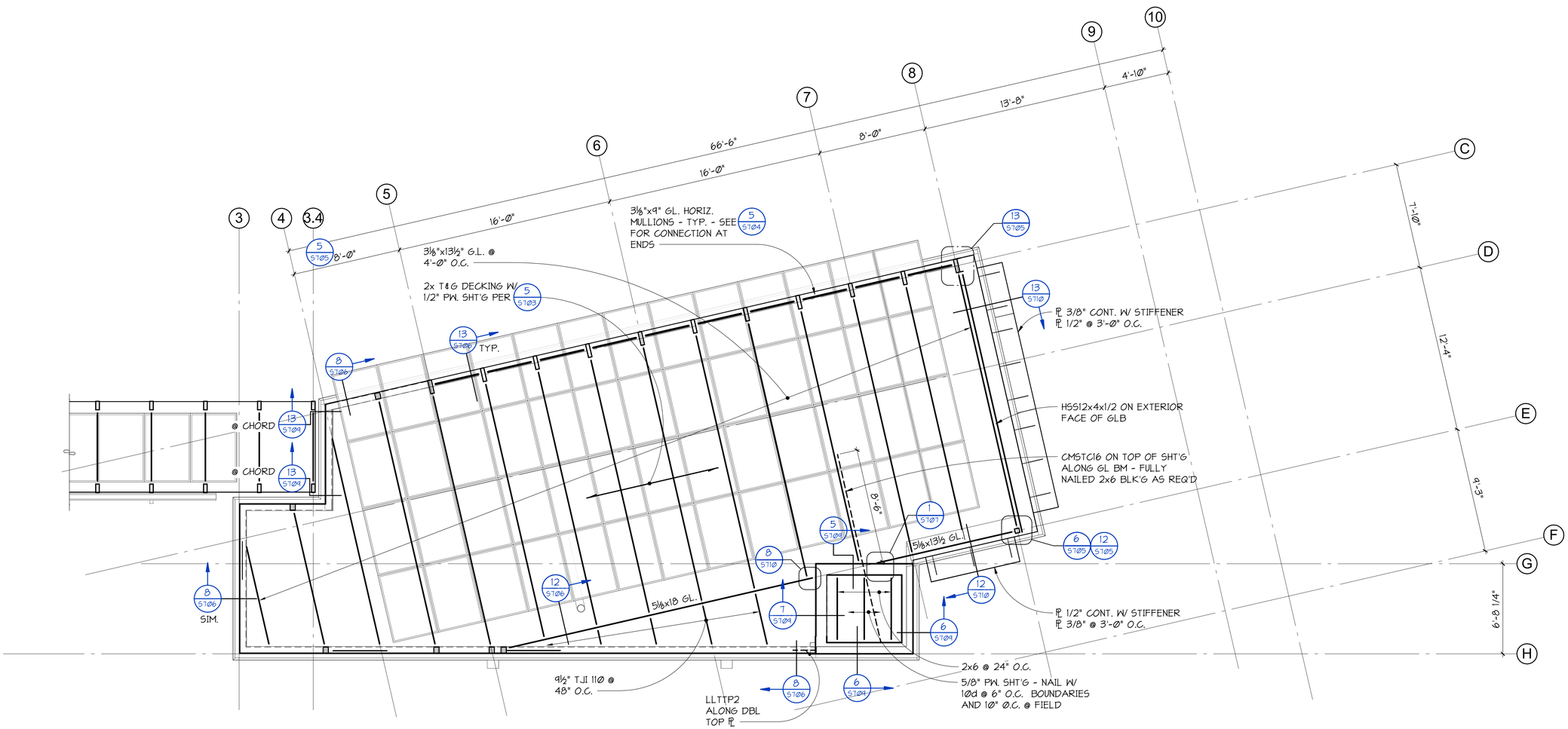

FOR PLAN NOTES SEE SHEET S110

NORTH

1 / S141 ROOF - FRAMING PLAN

1/4" = 1'-0"

C:_Revit Models\21201 Mercer Island Residence R2022 (Central)_DEHollar.rvt

MILLER HULL

The Miller Hull Partnership, LLP
Architecture and Planning
Polson Building
71 Columbia, Sixth Floor
Seattle, WA 98104

Phone: 206.682.6837
Contact: Name

PCS Structural Solutions
Seattle | Tacoma | Portland
www.pcs-structural.com

STAMP

MERCER ISLAND HOUSE: CASCADE

6838 96TH AVE SE
MERCER ISLAND, WA 98040

SUBMITTAL

100% CONSTRUCTION DOCUMENTS

February 24, 2023

REVISIONS

No.	Description	Date

Drawn: DEH
Checked: TJR
M|H Proj No.: A20.0085.00

Issue Date: February 24, 2023

SHEET

ROOF - FRAMING PLAN

S141

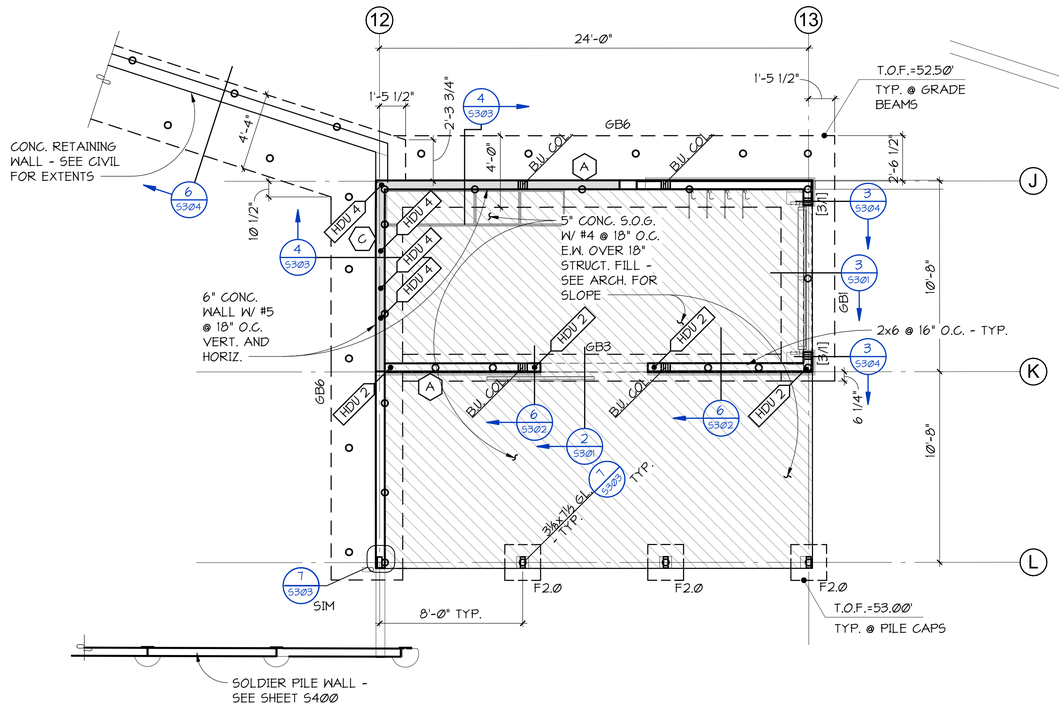

1 S151 GARAGE - FOUNDATION PLAN
1/4" = 1'-0"

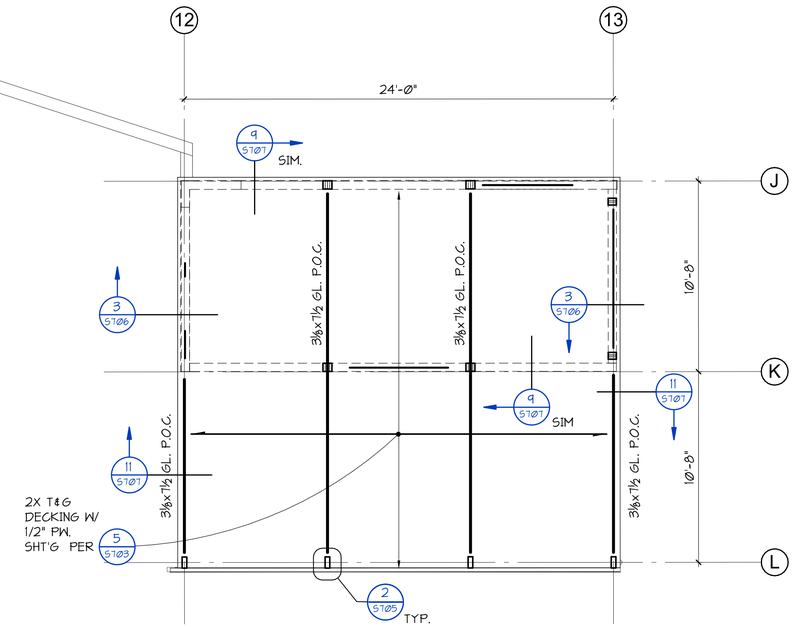

2 S151 GARAGE - ROOF FRAMING PLAN
1/4" = 1'-0"

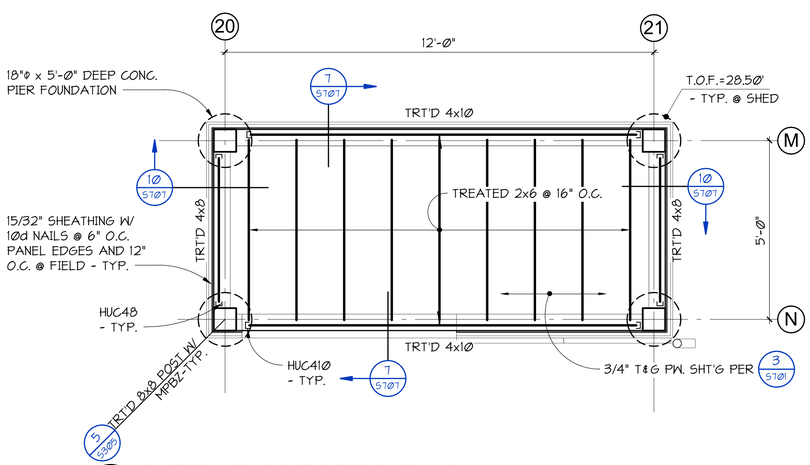

3 S151 SHED - FOUNDATION PLAN
1/2" = 1'-0"

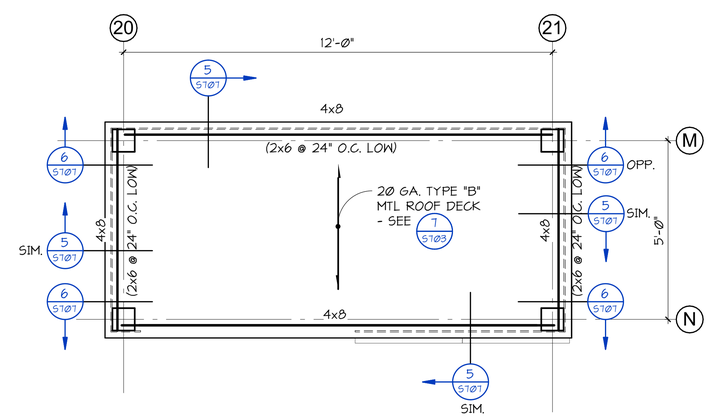

4 S151 SHED - ROOF FRAMING PLAN
1/2" = 1'-0"

C:_Revit Models\21201 Mercer Island Residence R2022 (Central)_DEHollar.rvt

MILLER HULL
The Miller Hull Partnership, LLP
Architecture and Planning
Polson Building
71 Columbia, Sixth Floor
Seattle, WA 98104

Phone: 206.682.6837
Contact: Name

PCS Structural Solutions
Seattle | Tacoma | Portland
www.pcs-structural.com

STAMP

REVIEWED FOR CODE COMPLIANCE
March 27, 2023
SITE COPY

MERCER ISLAND HOUSE: CASCADE

6838 96TH AVE SE
MERCER ISLAND, WA 98040

SUBMITTAL

100% CONSTRUCTION DOCUMENTS

February 24, 2023

REVISIONS

No.	Description	Date

Drawn: SMS
Checked: TJR
M|H Proj No.: A20.0085.00

Issue Date: February 24, 2023

SHEET

GARAGE AND SHED PLANS

S151

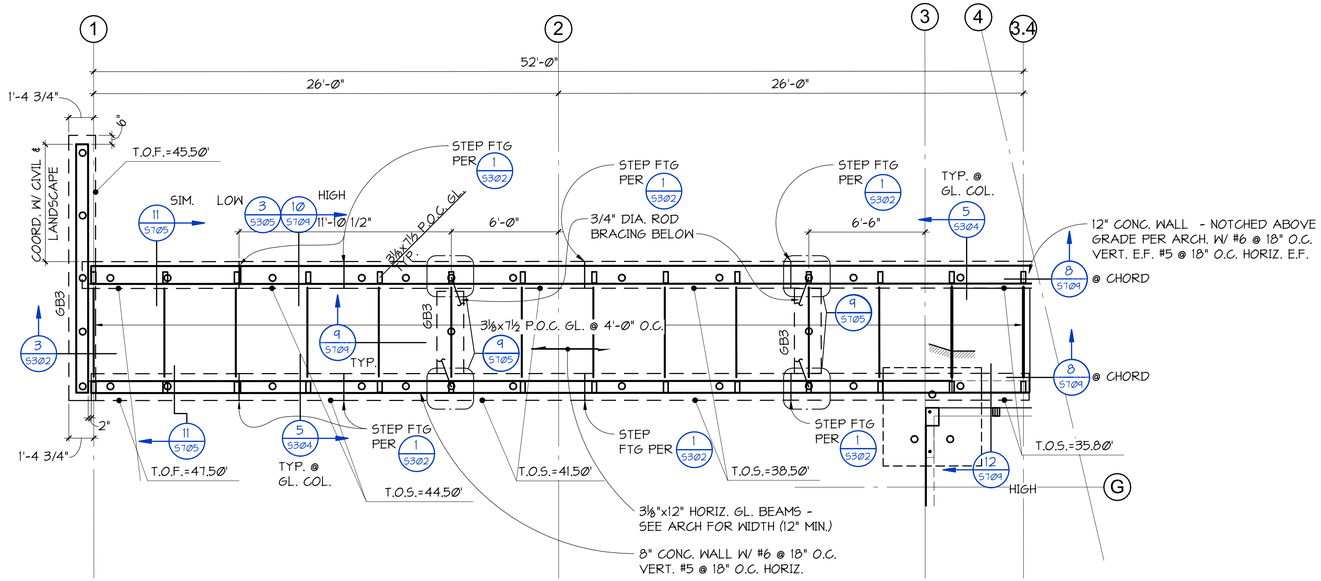

1 / S161 COVERED WALKWAY - FOUNDATION AND FLOOR FRAMING PLAN

1/4" = 1'-Ø"

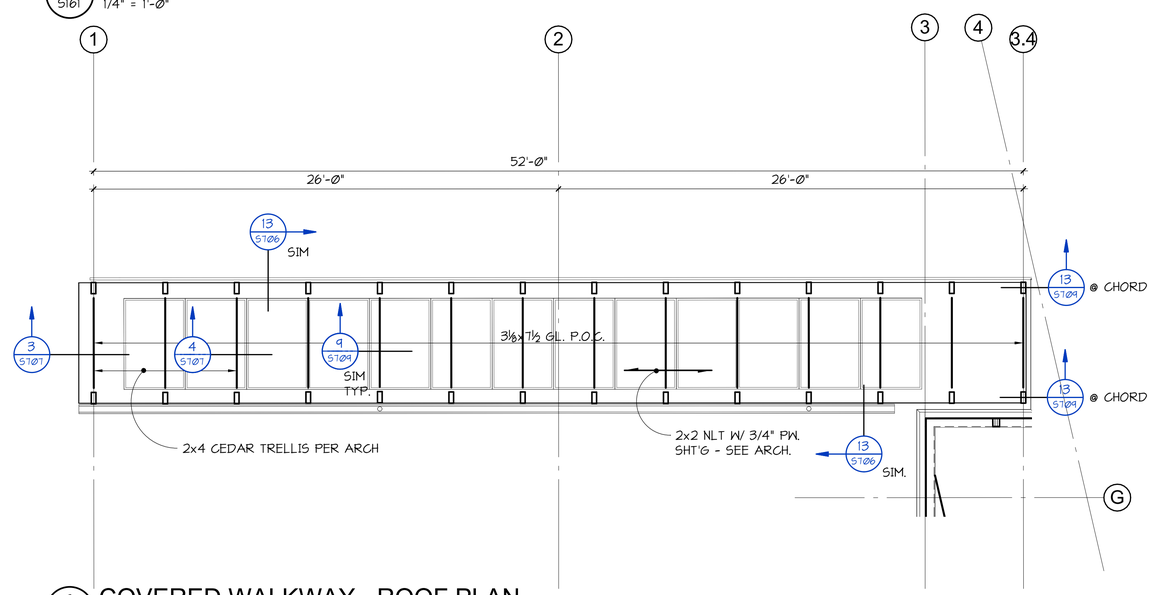

2 / S161 COVERED WALKWAY - ROOF PLAN

1/4" = 1'-Ø"

C:_Revit Models\21201 Mercer Island Residence R2022 (Central)_DEHollar.rvt

MILLER HULL

The Miller Hull Partnership, LLP
Architecture and Planning
Polson Building
71 Columbia, Sixth Floor
Seattle, WA 98104

Phone: 206.682.6837
Contact: Name

PCS Structural Solutions
Seattle | Tacoma | Portland
www.pcs-structural.com

STAMP

REVIEWED FOR CODE COMPLIANCE
March 27, 2023
SITE COPY

MERCER ISLAND HOUSE: CASCADE

6838 96TH AVE SE
MERCER ISLAND, WA 98040

SUBMITTAL

100% CONSTRUCTION DOCUMENTS

February 24, 2023

REVISIONS

No.	Description	Date

Drawn: SMS
Checked: TJR
M|H Proj No.: A20.0085.00

Issue Date: February 24, 2023

SHEET

COVERED WALKWAY PLANS

S161

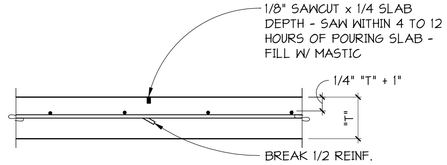

TYPICAL CONTROL JOINT FOR SLAB-ON-GRADE

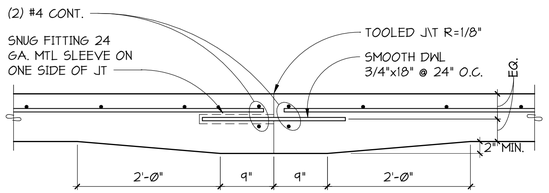

TYPICAL CONSTRUCTION JOINT FOR SLAB-ON-GRADE

1 / S301 SECTION
NO SCALE

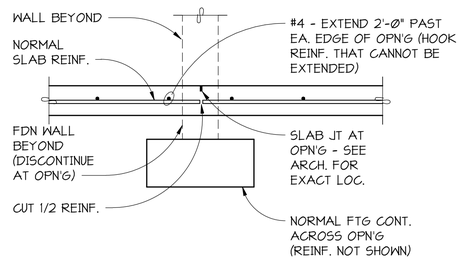

2 / S301 SECTION
NO SCALE

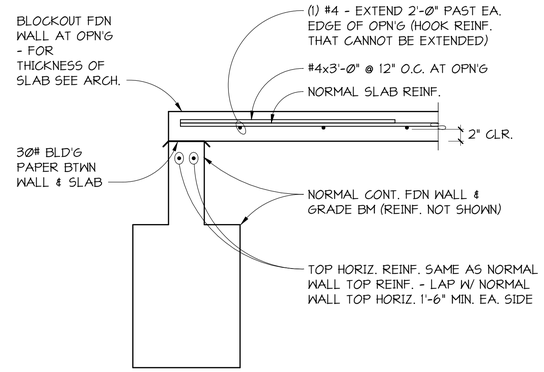

TYPICAL SLAB AT EXTERIOR OPENING

3 / S301 SECTION
NO SCALE

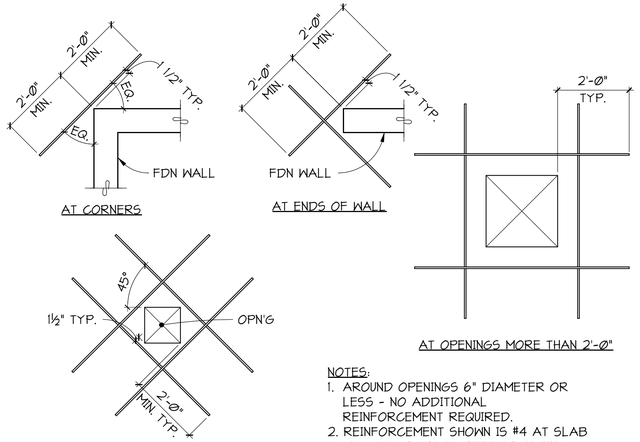

NOTES:
1. AROUND OPENINGS 6" DIAMETER OR LESS - NO ADDITIONAL REINFORCEMENT REQUIRED.
2. REINFORCEMENT SHOWN IS #4 AT SLAB MID-DEPTH. HOOK REINFORCEMENT THAT CANNOT BE EXTENDED.

TYPICAL SLAB-ON-GRADE DISCONTINUITY REINFORCEMENT

4 / S301 PLAN DETAILS
NO SCALE

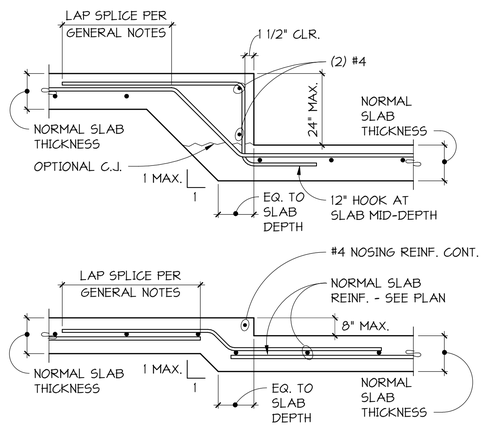

TYPICAL SLAB STEPS OR DEPRESSIONS

5 / S301 SECTION
NO SCALE

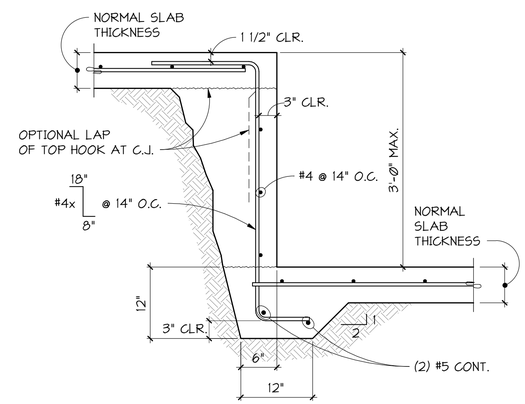

TYPICAL STEPPED SLAB (3'-0" MAXIMUM)

6 / S301 SECTION
NO SCALE

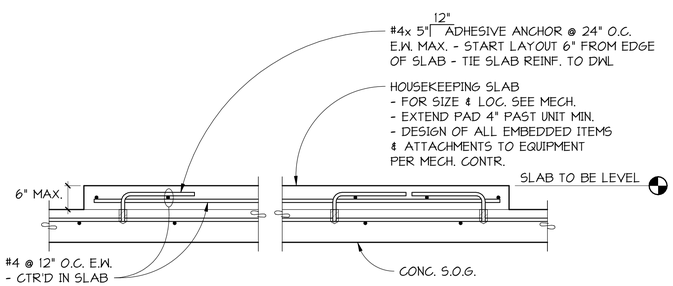

HOUSEKEEPING SLAB AT SLAB-ON-GRADE

7 / S301 DETAIL
NO SCALE

C:_Revit Models\21201 Mercer Island Residence R2022 (Central)_DEHollar.rvt

MILLER HULL
The Miller Hull Partnership, LLP
Architecture and Planning
Polson Building
71 Columbia, Sixth Floor
Seattle, WA 98104

Phone: 206.682.6837
Contact: Name

PCS Structural Solutions
Seattle | Tacoma | Portland
www.pcs-structural.com

STAMP

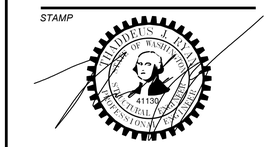

MERCER ISLAND HOUSE: CASCADE

6838 96TH AVE SE
MERCER ISLAND, WA 98040

SUBMITTAL

100% CONSTRUCTION DOCUMENTS

February 24, 2023

REVISIONS

No.	Description	Date

Drawn: DEH
Checked: TJR
M|H Proj No.: A20.0085.00

Issue Date: February 24, 2023

SHEET

SLAB-ON-GRADE DETAILS
S301

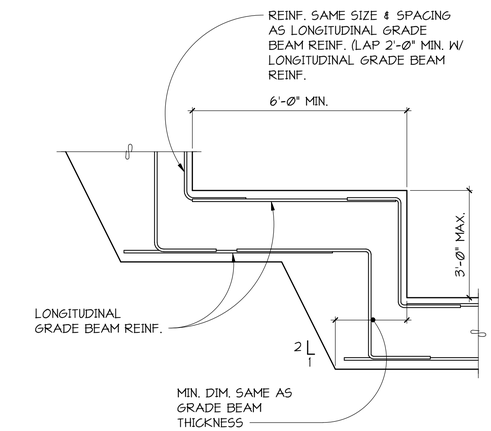

TYPICAL STEPPED GRADE BEAM

1 S302 DETAIL
NO SCALE

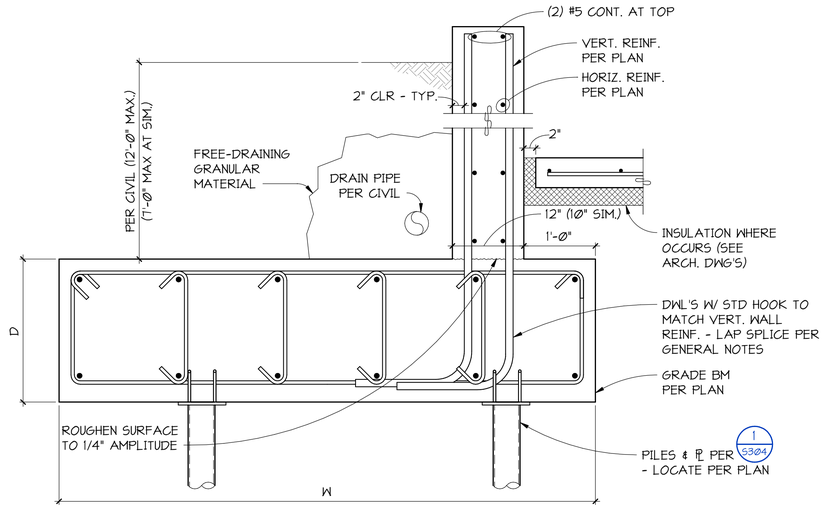

2 S302 SECTION
1" = 1'-Ø"

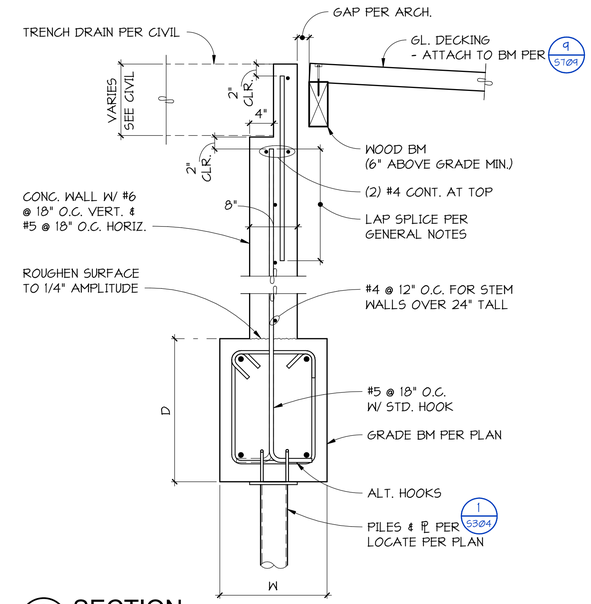

3 S302 SECTION
1" = 1'-Ø"

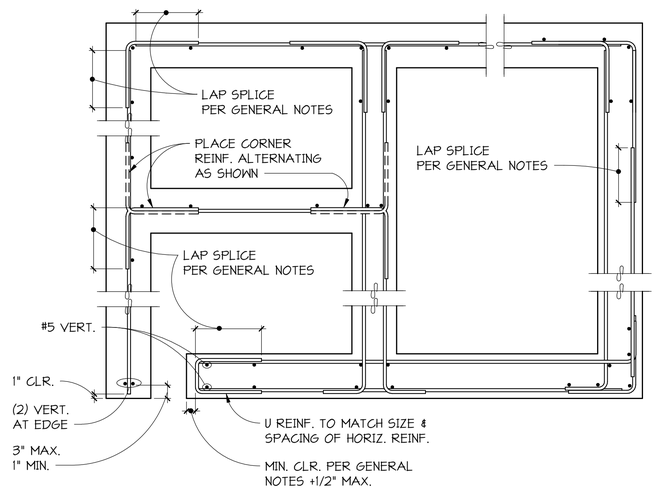

TYPICAL REINFORCEMENT PLACEMENT FOR CAST IN PLACE CONCRETE WALLS, GRADE BEAMS, AND STEM WALLS

4 S302 DETAIL
NO SCALE

NOTES:
1. VERTICAL REINFORCEMENT SHOWN IS ADDITIONAL IF NORMAL STEM WALL REINFORCEMENT IS NOT IN PROPER LOCATION.
2. CORNER REINFORCEMENT IS SAME SIZE AND SPACING AS HORIZONTAL REINFORCEMENT.
3. STANDARD HOOK MAY BE SUBSTITUTED FOR CORNER REINFORCEMENT - SEE NOTE #5.
4. REINFORCEMENT AT ALL CORNERS, ENDS, AND INTERSECTIONS OF WALLS SHALL BE PLACED IN ACCORDANCE WITH APPROPRIATE DETAIL SHOWN.
5. USE STANDARD HOOK FOR EMBEDMENT LESS THAN 24" PAST FACE OF WALL.

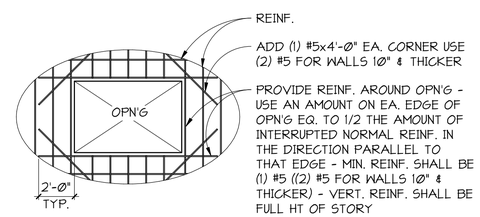

TYPICAL AT OPENINGS IN CAST IN PLACE CONCRETE WALLS

5 S302 SECTION
NO SCALE

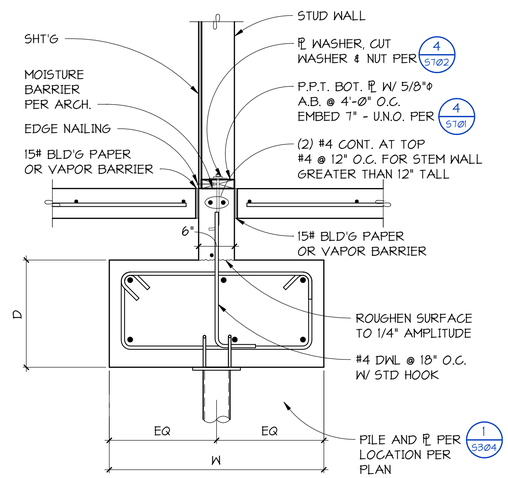

TYPICAL FOUNDATION AT INTERIOR BEARING STUD WALL

6 S302 SECTION
NO SCALE

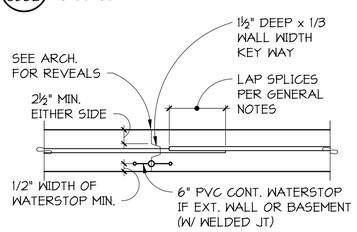

TYPICAL AT VERTICAL WALL JOINTS

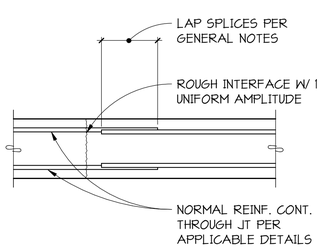

TYPICAL AT CONCRETE GRADE BEAMS AND FOOTINGS

NOTE:
OBTAIN APPROVAL OF ENGINEER FOR LOCATION OF ANY CONSTRUCTION JOINT.

TYPICAL FOR CAST IN PLACE CONCRETE WALLS, GRADE BEAMS, AND FOOTINGS

7 S302 CONSTRUCTION JOINTS
NO SCALE

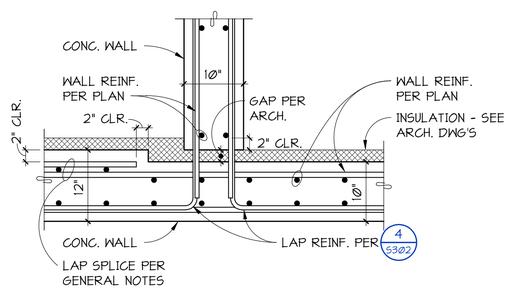

8 S302 PLAN DETAIL
1" = 1'-Ø"

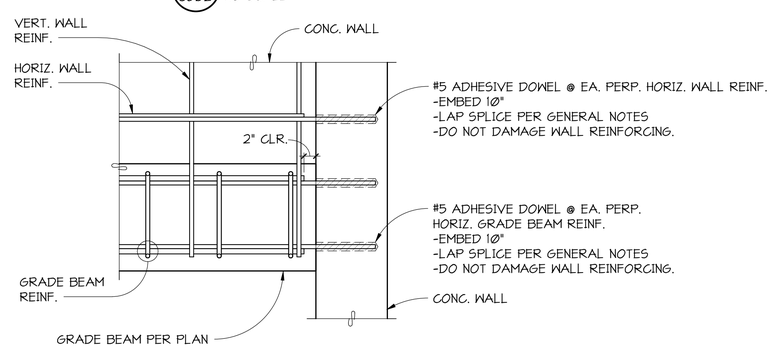

9 S302 SECTION
1" = 1'-Ø"

MILLER HULL
The Miller Hull Partnership, LLP
Architecture and Planning
Polson Building
71 Columbia, Sixth Floor
Seattle, WA 98104
Phone: 206.682.6837
Contact: Name

PCS Structural Solutions
Seattle | Tacoma | Portland
www.pcs-structural.com

STAMP

REVIEWED FOR CODE COMPLIANCE
March 27, 2023
SITE COPY

MERCER ISLAND HOUSE: CASCADE

6838 96TH AVE SE
MERCER ISLAND, WA 98040

SUBMITTAL

100% CONSTRUCTION DOCUMENTS

February 24, 2023

REVISIONS

No.	Description	Date

Drawn: DEH
Checked: TJR
M|H Proj No.: A20.0085.00
Issue Date: February 24, 2023

SHEET

FOUNDATION DETAILS
S302

C:_Revit Models\21201 Mercer Island Residence R2022 (Central)_DEHollar.rvt

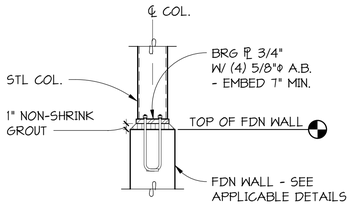

TYPICAL STEEL COLUMN BASE AT CONCRETE WALL

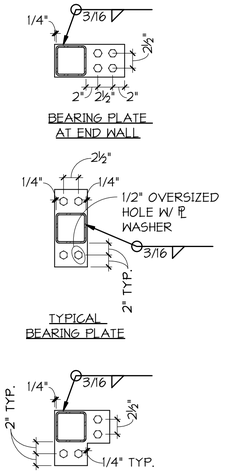

1 S303 SECTION
NO SCALE

MARK	DIMENSIONS		REINFORCEMENT EACH WAY
	"W"	"T"	
F2.0	2'-0"	12"	(3) #4
F3.0	3'-0"	12"	(4) #4
F4.0	4'-0"	14"	(4) #5
F5.5	5'-6"	24"	(5) #6 T&B

NOTES:
1. CENTER ALL FOOTINGS ON COLUMN ABOVE EXCEPT AS SHOWN OTHERWISE.
2. FOOTINGS SHALL BEAR ON UNDISTURBED OR COMPACTED MATERIAL PER GENERAL NOTES.

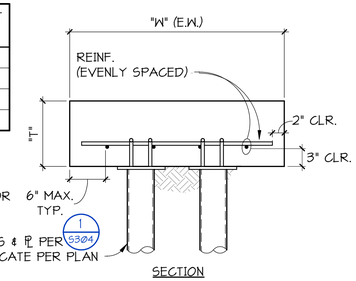

TYPICAL CONCRETE PILE CAP

2 S303 SECTION
NO SCALE

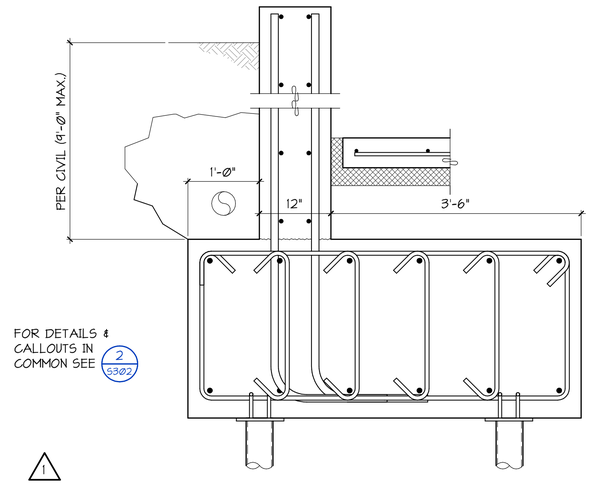

3 S303 SECTION
NO SCALE

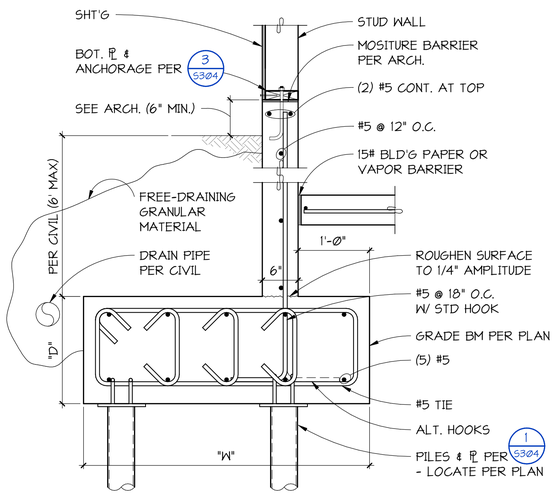

4 S303 SECTION
1" = 1'-0"

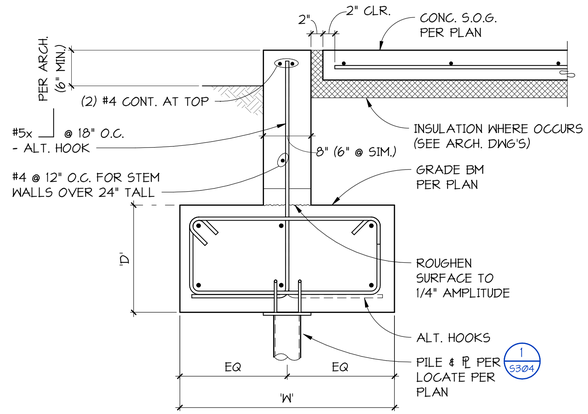

5 S303 SECTION
1" = 1'-0"

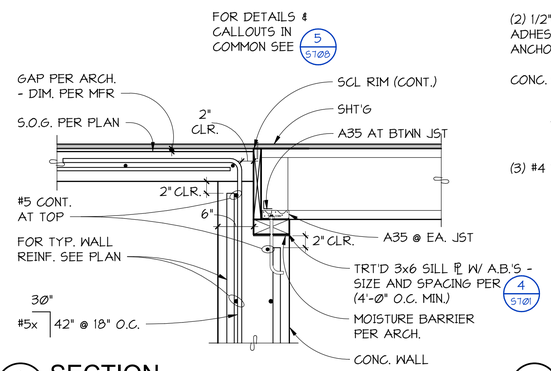

6 S303 SECTION
1" = 1'-0"

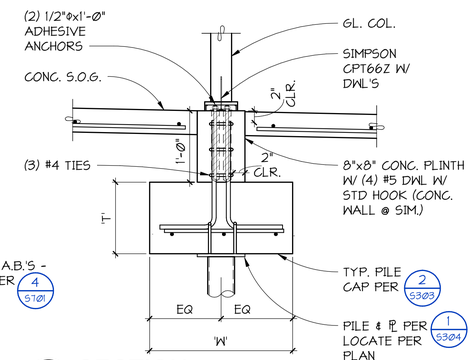

7 S303 SECTION
1" = 1'-0"

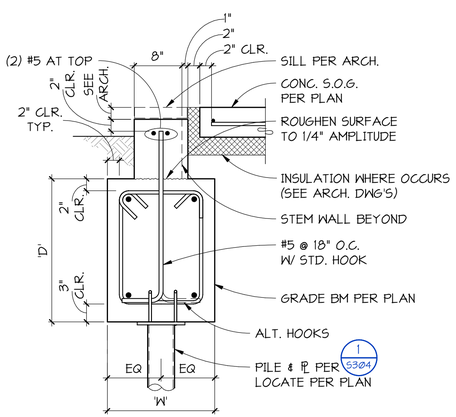

8 S303 SECTION
1" = 1'-0"

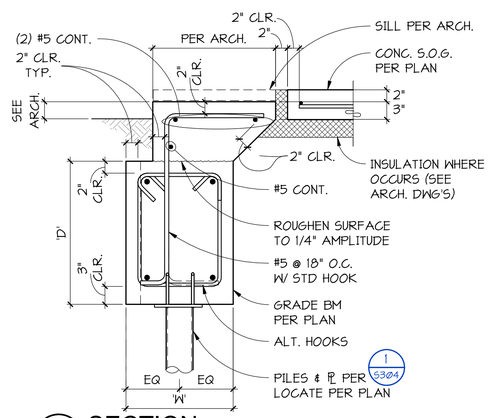

9 S303 SECTION
1" = 1'-0"

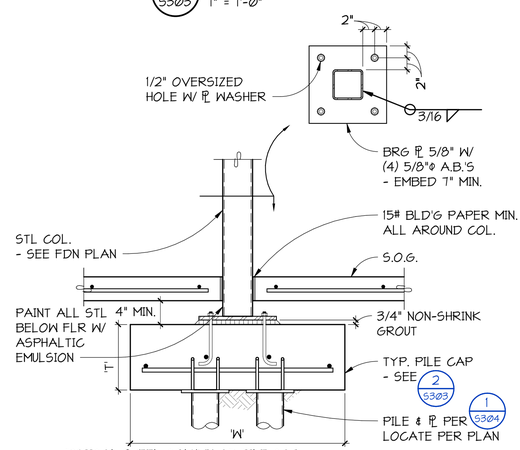

TYPICAL STEEL COLUMN AT PILE CAP

10 S303 SECTION
NO SCALE

NOTE:
LAP BOTTOM GRADE BEAM REINFORCEMENT INSTEAD OF BOTTOM MAT REINFORCEMENT @ SIM

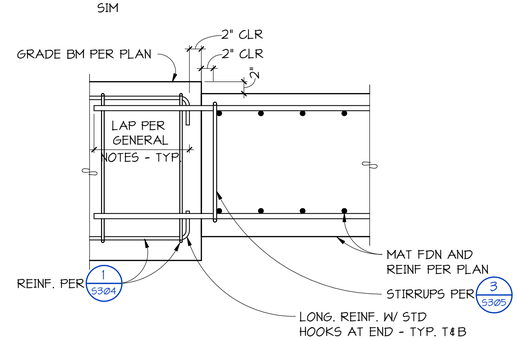

11 S303 SECTION
1" = 1'-0"

C:_Revit Models\21201 Mercer Island Residence R2022 (Central)_DEHollar.rvt

MILLER HULL
The Miller Hull Partnership, LLP
Architecture and Planning
Polson Building
71 Columbia, Sixth Floor
Seattle, WA 98104

Phone: 206.682.6837
Contact: Name

PCS Structural Solutions
Seattle | Tacoma | Portland
www.pcs-structural.com

STAMP

MERCER ISLAND HOUSE: CASCADE

6838 96TH AVE SE
MERCER ISLAND, WA 98040

SUBMITTAL

100% CONSTRUCTION DOCUMENTS

February 24, 2023

REVISIONS

No.	Description	Date
1	BUILDING PERMIT RESUBMITTAL	10/27/22

Drawn: DEH
Checked: TJR
M|H Proj No.: A20.0085.00
Issue Date: February 24, 2023

SHEET

FOUNDATION DETAILS
S303

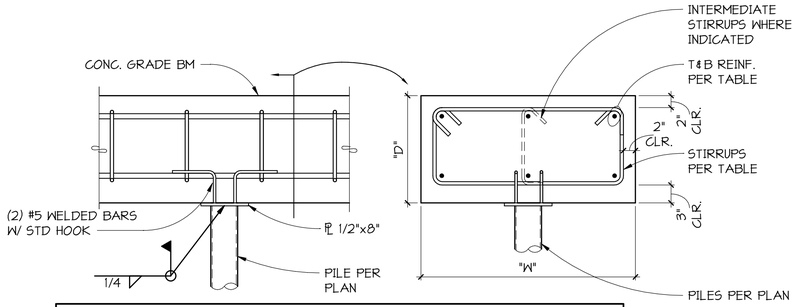

GRADE BEAMS					
MARK	"W"	"D"	REINFORCEMENT TOP AND BOTTOM	TRANSVERSE STIRRUPS	INTERMEDIATE STIRRUPS
GB1	36"	18"	(3) #6	#4 @ 12" O.C.	NONE
GB2	90"	24"	(8) #6	#5 @ 12" O.C.	(6) #5 @ 12" O.C.
GB3	18"	24"	(2) #6	#5 @ 12" O.C.	NONE
GB4	72"	24"	(6) #6	#5 @ 12" O.C.	(4) #5 @ 12" O.C.
GB5	66"	30"	(6) #6	#5 @ 10" O.C.	(4) #5 @ 10" O.C.
GB6	48"	18"	(5) #5	#4 @ 12" O.C.	(3) #4 @ 12" O.C.

TYPICAL GRADE BEAM AND PIPE PILE

1/S304 DETAIL
NO SCALE

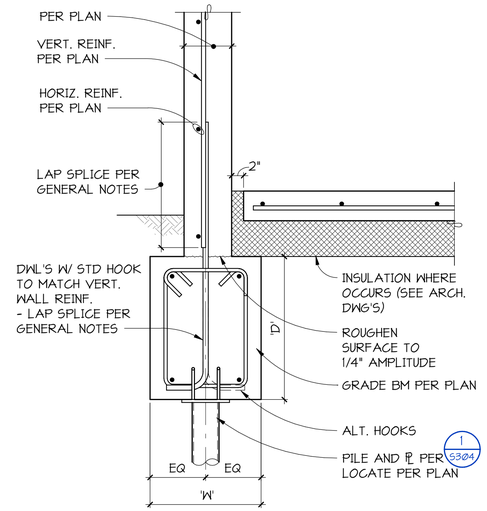

TYPICAL EXTERIOR GRADE BEAM

2/S304 SECTION
NO SCALE

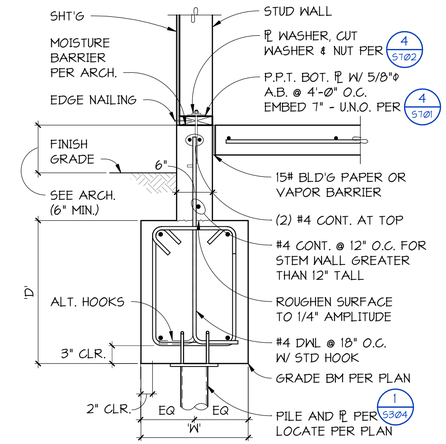

TYPICAL FOUNDATION AT GARAGE EXTERIOR STUD WALL

3/S304 SECTION
NO SCALE

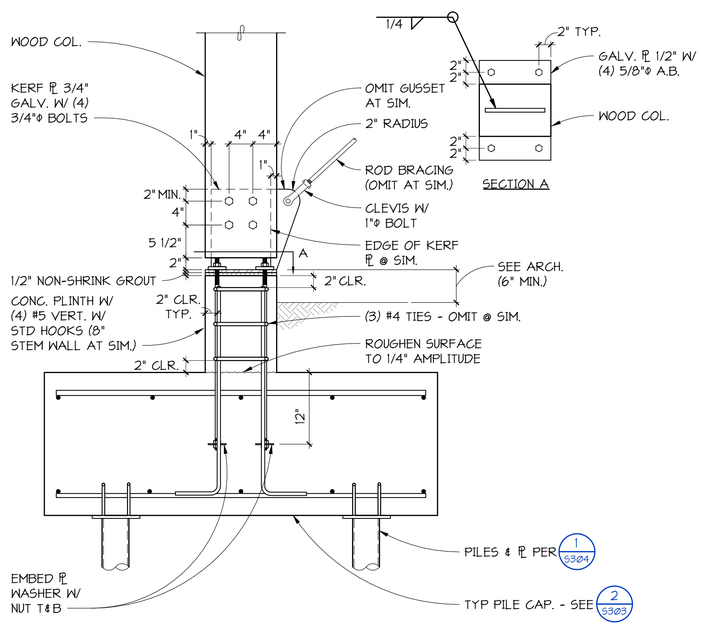

4/S304 DETAIL
1" = 1'-0"

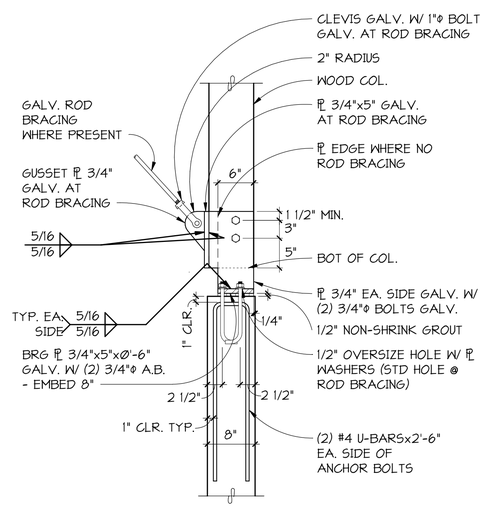

5/S304 DETAIL
1" = 1'-0"

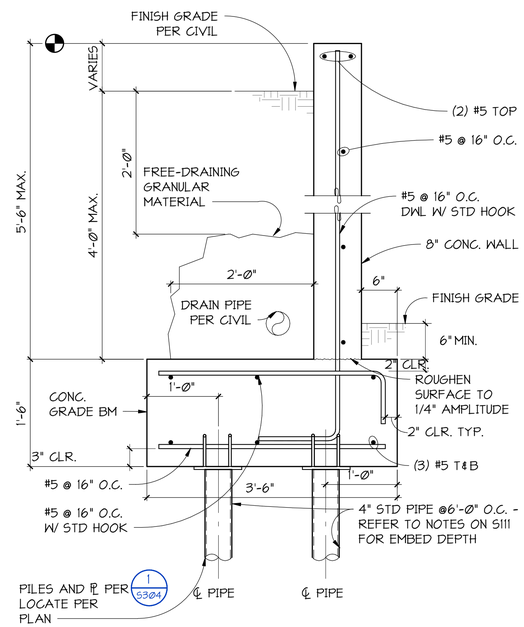

6/S304 SECTION
NO SCALE

C:_Revit Models\21201 Mercer Island Residence R2022 (Central)_DEHollar.rvt

MILLER HULL
The Miller Hull Partnership, LLP
Architecture and Planning
Polson Building
71 Columbia, Sixth Floor
Seattle, WA 98104

Phone: 206.682.6837
Contact: Name

PCS Structural Solutions
Seattle | Tacoma | Portland
www.pcs-structural.com

STAMP

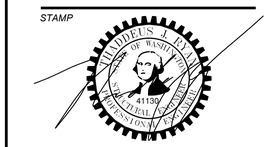

MERCER ISLAND HOUSE: CASCADE

6838 96TH AVE SE
MERCER ISLAND, WA 98040

SUBMITTAL

100% CONSTRUCTION DOCUMENTS

February 24, 2023

REVISIONS

No.	Description	Date

Drawn: DEH
Checked: TJR
M|H Proj No.: A20.0085.00

Issue Date: February 24, 2023

SHEET

FOUNDATION DETAILS
S304

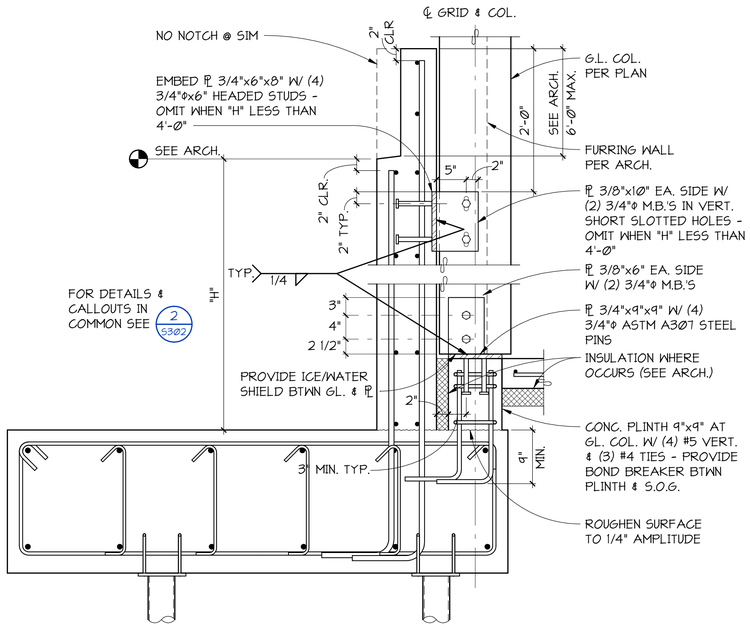

1 S305 SECTION
1" = 1'-Ø"

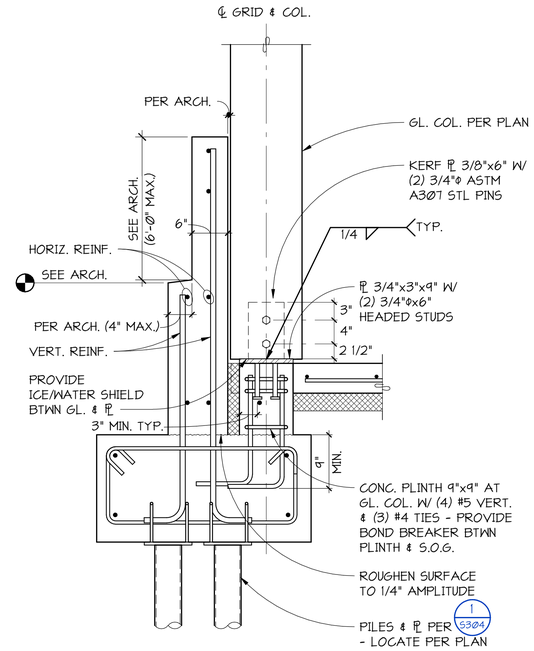

2 S305 SECTION
1" = 1'-Ø"

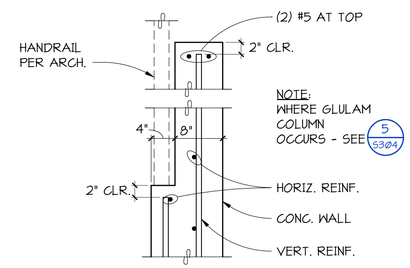

3 S305 SECTION
1" = 1'-Ø"

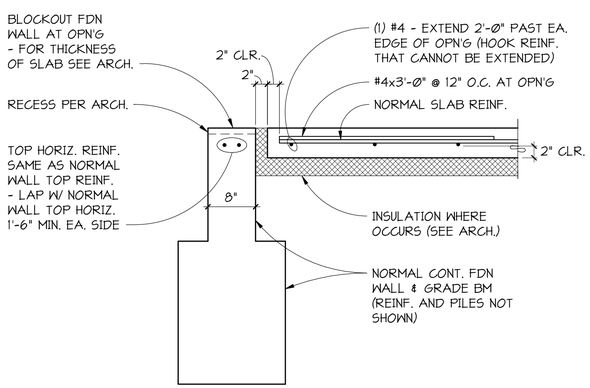

4 S305 SECTION
1" = 1'-Ø"

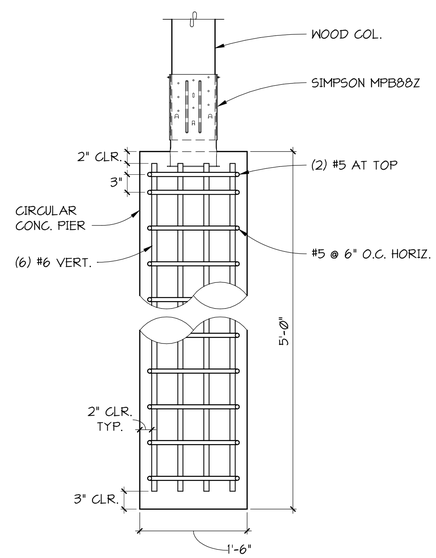

5 S305 DETAIL
NO SCALE

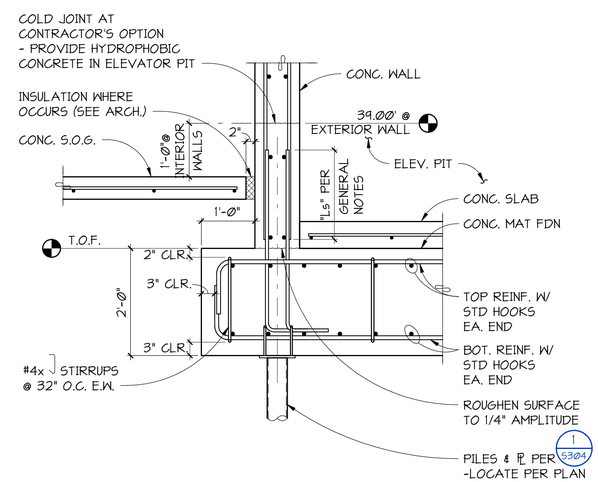

6 S305 SECTION
NO SCALE

C:_Revit Models\21201 Mercer Island Residence R2022 (Central)_DEHollar.rvt

MILLER HULL
The Miller Hull Partnership, LLP
Architecture and Planning
Polson Building
71 Columbia, Sixth Floor
Seattle, WA 98104

Phone: 206.682.6837
Contact: Name

PCS Structural Solutions
Seattle | Tacoma | Portland
www.pcs-structural.com

STAMP

MERCER ISLAND HOUSE: CASCADE

6838 96TH AVE SE
MERCER ISLAND, WA 98040

SUBMITTAL

100% CONSTRUCTION DOCUMENTS

February 24, 2023

REVISIONS

No.	Description	Date

Drawn: DEH
Checked: TJR
M|H Proj No.: A20.0085.00

Issue Date: February 24, 2023

SHEET

FOUNDATION DETAILS
S305

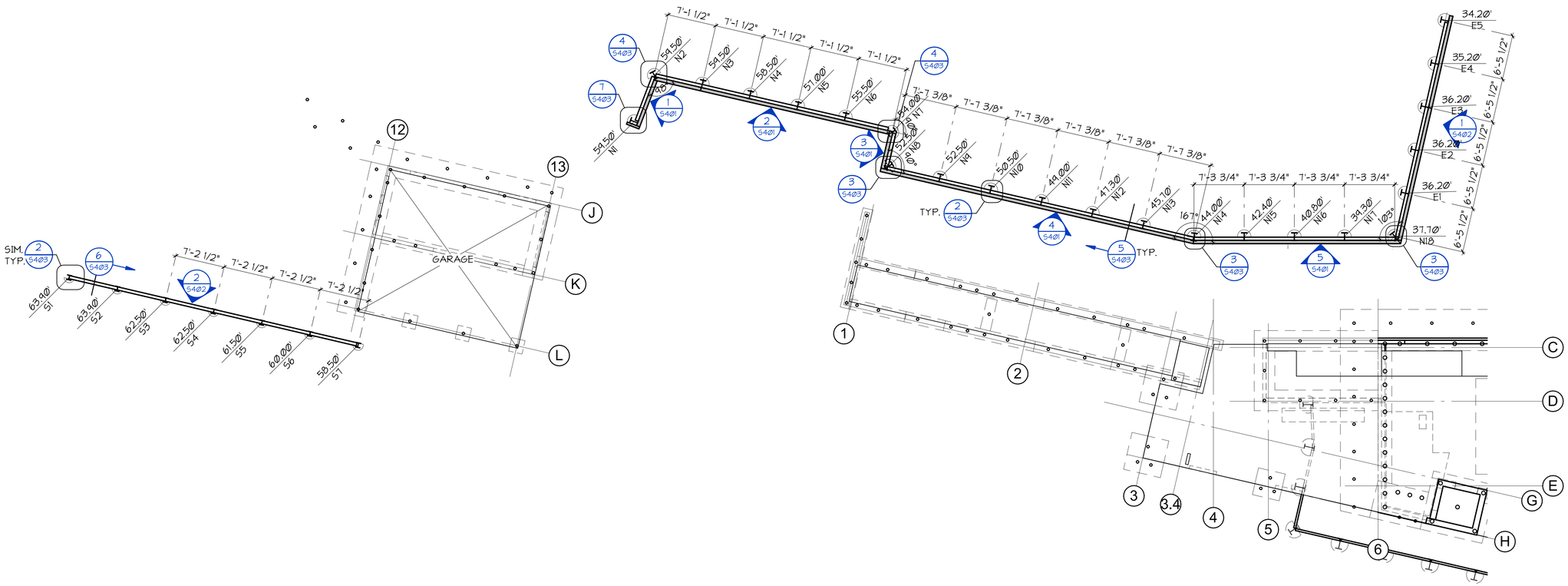

1 SOLDIER PILE WALL PLAN
S400 1/8" = 1'-0"

NOTES:

1. INDICATES TOP OF STEEL PILE ELEVATION FOR FABRICATION PURPOSES. ELEVATION IS RELATIVE TO FINAL GRADE.

   INDICATES STEEL PILE TYPE. SEE SHEET S401 AND S402 FOR SCHEDULES. SEE S403 FOR DETAILS.

2. BOTTOM OF EXCAVATION ELEVATION PER CIVIL DRAWINGS.

3. SEE CIVIL AND LANDSCAPE FOR WALL DETAILS

4. HORIZONTAL LOCATION OF SOLDIER PILES PER CIVIL

C:_Revit Models\21201 Mercer Island Residence R2022 (Central)_DEHollar.rvt

MILLER HULL

The Miller Hull Partnership, LLP
Architecture and Planning
Polson Building
71 Columbia, Sixth Floor
Seattle, WA 98104

Phone: 206.682.6837
Contact: Name

PCS Structural Solutions
Seattle | Tacoma | Portland
www.pcs-structural.com

STAMP

REVIEWED FOR CODE COMPLIANCE
March 27, 2023
SITE COPY

MERCER ISLAND HOUSE: CASCADE

6838 96TH AVE SE
MERCER ISLAND, WA 98040

SUBMITTAL

100% CONSTRUCTION DOCUMENTS

February 24, 2023

REVISIONS

No.	Description	Date

Drawn: RSC
Checked: TJR
M|H Proj No.: A20.0085.00

Issue Date: February 24, 2023

SHEET

SOLDIER PILE WALL PLAN
S400

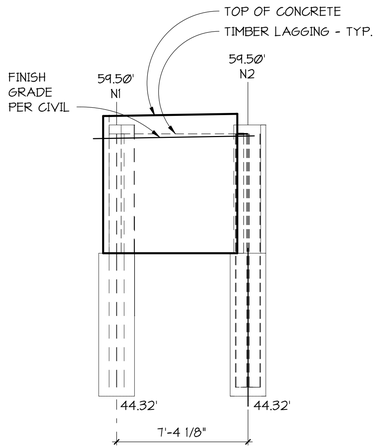

1 S401 NORTH WALL ELEVATION
1/4" = 1'-0"

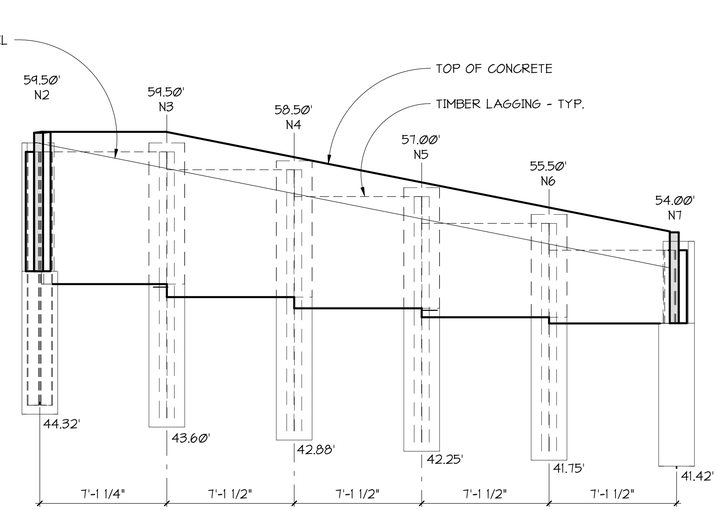

2 S401 NORTH WALL ELEVATION
1/4" = 1'-0"

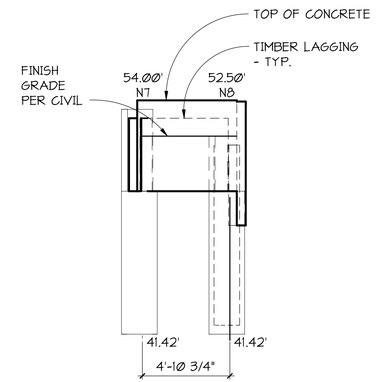

3 S401 NORTH WALL ELEVATION
1/4" = 1'-0"

SOLDIER PILE SCHEDULE - NORTH WALL						
PILE #	PILE SIZE	DIAMETER	TOP OF PILE (1)	BOT. OF EXCAVATION (2)	D (FT.)	BOT. OF PILE
N1	W14x74	24"	59.50'	52.32'	8'	44.32'
N2	W14x74	24"	59.50'	52.32'	8'	44.32'
N3	W14x74	24"	59.50'	51.60'	8'	43.60'
N4	W14x74	24"	58.50'	50.88'	8'	42.88'
N5	W14x74	24"	57.00'	50.25'	8'	42.25'
N6	W14x74	24"	55.50'	49.75'	8'	41.75'
N7	W14x74	24"	54.00'	49.42'	8'	41.42'
N8	W14x74	24"	52.50'	49.42'	8'	41.42'
N9	W14x74	24"	52.50'	47.50'	8'	39.50'
N10	W14x74	24"	50.50'	45.50'	8'	37.50'
N11	W14x74	24"	49.00'	43.50'	8'	35.50'
N12	W14x74	24"	47.30'	41.50'	8'	33.50'
N13	W14x74	24"	45.70'	39.50'	8'	31.50'
N14	W14x74	24"	44.00'	37.50'	8'	29.50'
N15	W14x74	24"	42.40'	36.10'	8'	28.10'
N16	W14x74	24"	40.80'	35.00'	8'	27.00'
N17	W14x74	24"	39.30'	32.80'	8'	24.80'
N18	W14x74	24"	37.70'	31.10'	8'	23.10'

(1) CONTRACTOR TO VERIFY TOP OF PILE ELEVATION WITH CIVIL DRAWINGS.

(2) CONTRACTOR TO VERIFY BOTTOM OF EXCAVATION WITH BUILDING FOUNDATION PLANS AND DETAILS.

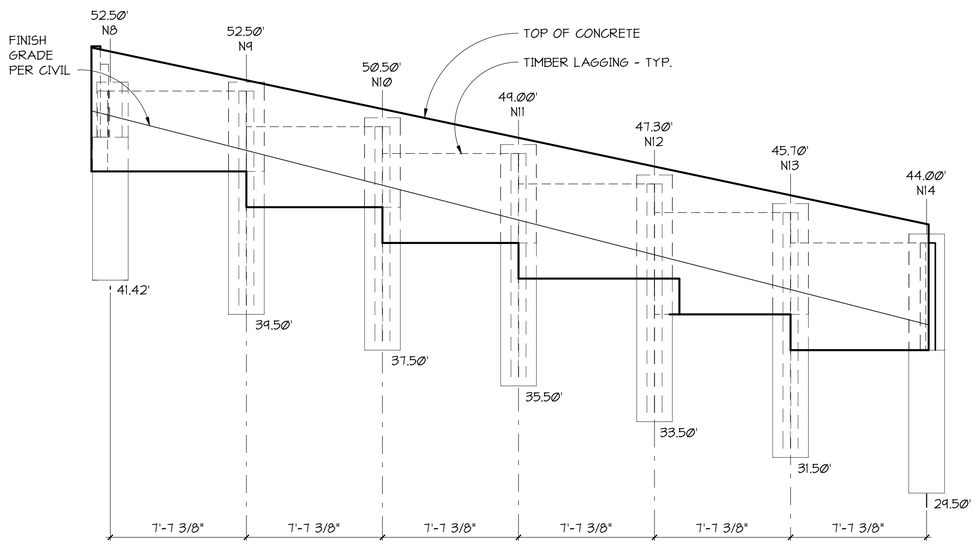

4 S401 NORTH WALL ELEVATION
1/4" = 1'-0"

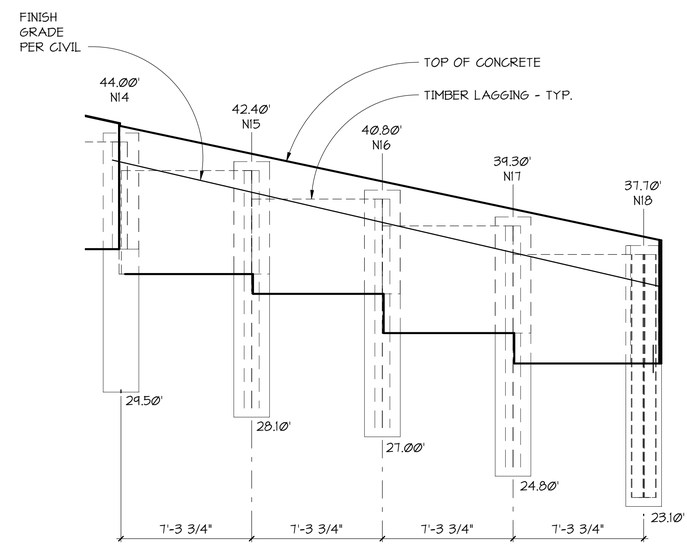

5 S401 NORTH WALL ELEVATION
1/4" = 1'-0"

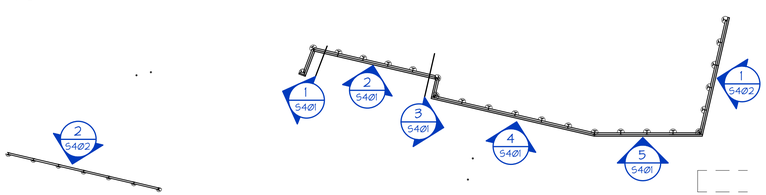

6 S401 SOLDIER PILE WALL KEY PLAN
1" = 20'-0"

C:_Revit Models\21201 Mercer Island Residence R2022 (Central)_DEHollar.rvt

MILLER HULL
The Miller Hull Partnership, LLP
Architecture and Planning
Polson Building
71 Columbia, Sixth Floor
Seattle, WA 98104

Phone: 206.682.6837
Contact: Name

PCS Structural Solutions
Seattle | Tacoma | Portland
www.pcs-structural.com

STAMP

REVIEWED FOR CODE COMPLIANCE
March 27, 2023
SITE COPY

MERCER ISLAND HOUSE: CASCADE

6838 96TH AVE SE
MERCER ISLAND, WA 98040

SUBMITTAL

100% CONSTRUCTION DOCUMENTS

February 24, 2023

REVISIONS

No.	Description	Date

Drawn: Author
Checked: Checker
M|H Proj No.: A20.0085.00

Issue Date: February 24, 2023

SHEET

SHORING WALL ELEVATIONS

S401

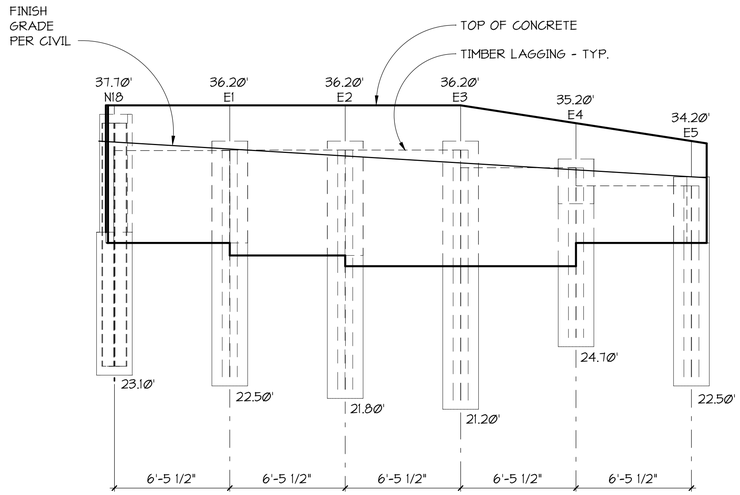

1 / S402 EAST WALL ELEVATION

1/4" = 1'-0"

SOLDIER PILE SCHEDULE - EAST WALL						
PILE #	PILE SIZE	DIAMETER	TOP OF PILE (1)	BOT. OF EXCAVATION (2)	D (FT.)	BOT. OF PILE
E1	W14x74	24"	36.20'	30.50'	8'	22.50'
E2	W14x74	24"	36.20'	29.80'	8'	21.80'
E3	W14x74	24"	36.20'	29.20'	8'	21.20'
E4	W14x74	24"	35.20'	32.70'	8'	24.70'
E5	W14x74	24"	34.20'	30.50'	8'	22.50'

(1) CONTRACTOR TO VERIFY TOP OF PILE ELEVATION WITH CIVIL DRAWINGS.

(2) CONTRACTOR TO VERIFY BOTTOM OF EXCAVATION WITH BUILDING FOUNDATION PLANS AND DETAILS.

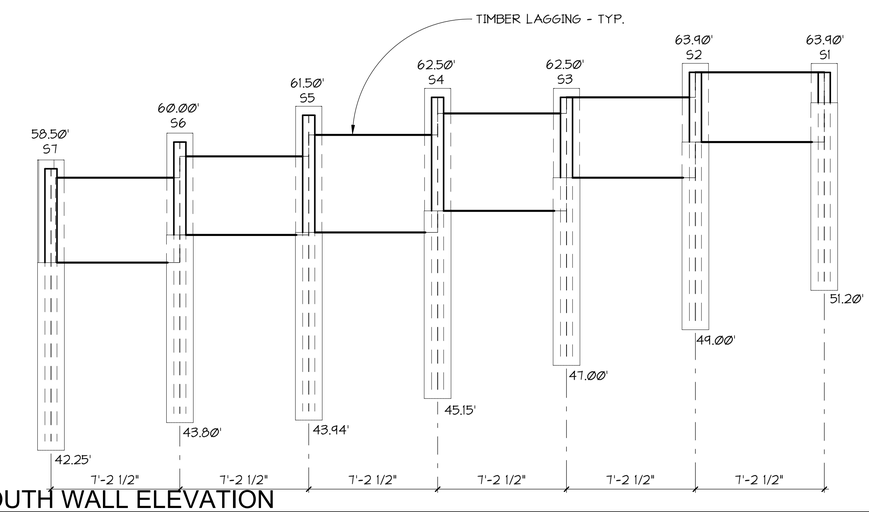

2 / S402 SOUTH WALL ELEVATION

1/4" = 1'-0"

SOLDIER PILE SCHEDULE - SOUTH WALL						
PILE #	PILE SIZE	DIAMETER	TOP OF PILE (1)	BOT. OF EXCAVATION (2)	D (FT.)	BOT. OF PILE
S1	W8x48	18"	63.90'	61.70'	10.5'	51.20'
S2	W8x48	18"	63.90'	59.50'	10.5'	49.00'
S3	W8x48	18"	62.50'	57.50'	10.5'	47.00'
S4	W8x48	18"	62.50'	55.65'	10.5'	45.15'
S5	W8x48	18"	61.50'	54.44'	10.5'	43.94'
S6	W8x48	18"	60.00'	54.30'	10.5'	43.80'
S7	W8x48	18"	58.50'	52.75'	10.5'	42.25'

(1) CONTRACTOR TO VERIFY TOP OF PILE ELEVATION WITH CIVIL DRAWINGS.

(2) CONTRACTOR TO VERIFY BOTTOM OF EXCAVATION WITH BUILDING FOUNDATION PLANS AND DETAILS.

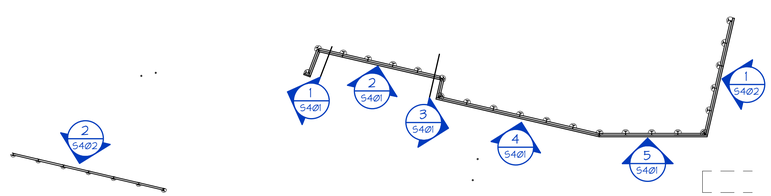

3 / S402 SOLDIER PILE WALL KEY PLAN

1" = 20'-0"

C:_Revit Models\21201 Mercer Island Residence R2022 (Central)_DEHollar.rvt

MILLER HULL

The Miller Hull Partnership, LLP
Architecture and Planning
Polson Building
71 Columbia, Sixth Floor
Seattle, WA 98104

Phone: 206.682.6837
Contact: Name

PCS Structural Solutions
Seattle | Tacoma | Portland
www.pcs-structural.com

STAMP

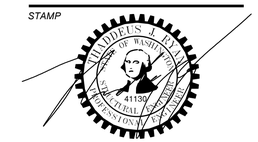

MERCER ISLAND HOUSE: CASCADE

6838 96TH AVE SE
MERCER ISLAND, WA 98040

SUBMITTAL

100% CONSTRUCTION DOCUMENTS

February 24, 2023

REVISIONS

No.	Description	Date

Drawn: Author
Checked: Checker
M|H Proj No.: A20.0085.00

Issue Date: February 24, 2023

SHEET

SHORING WALL ELEVATIONS

S402

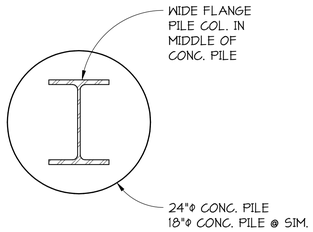

TYPICAL SOLDIER PILE

1 / S403 SECTION
1" = 1'-0"

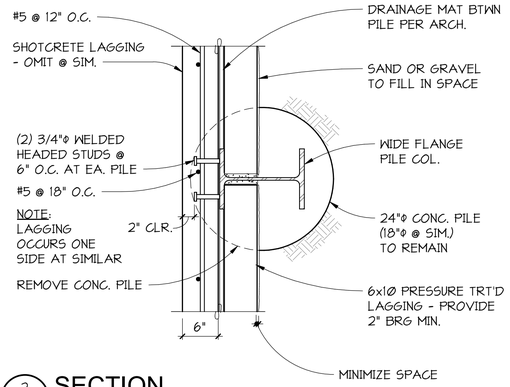

2 / S403 SECTION
1" = 1'-0"

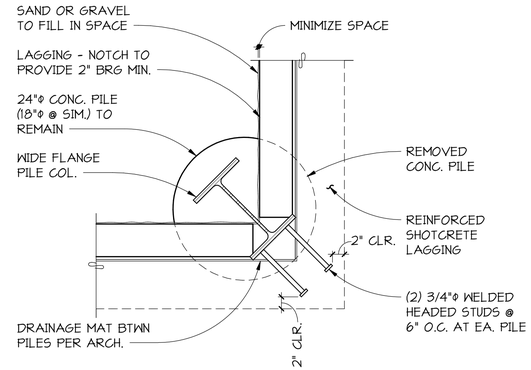

3 / S403 SECTION
1" = 1'-0"

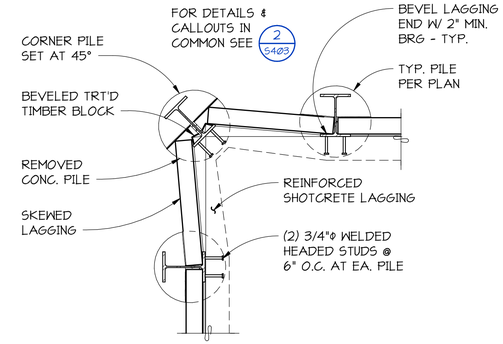

4 / S403 SECTION
1/2" = 1'-0"

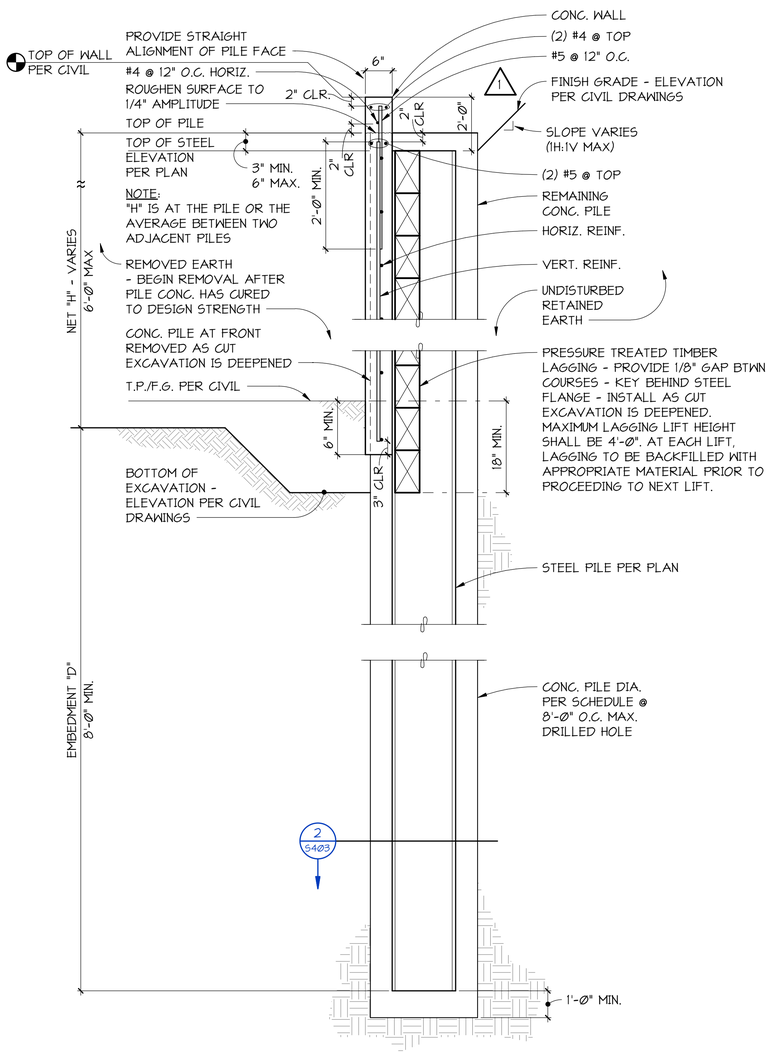

TYPICAL SOLDIER PILE RETAINING WALL

5 / S403 SECTION
3/4" = 1'-0"

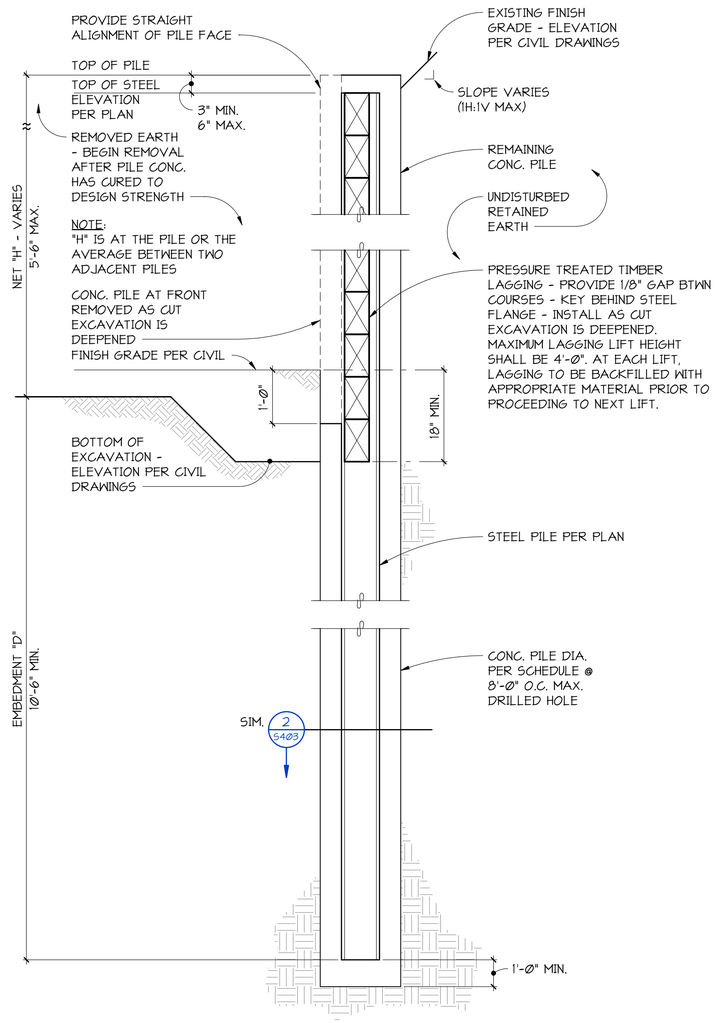

TYPICAL SOLDIER PILE RETAINING WALL

6 / S403 SECTION
3/4" = 1'-0"

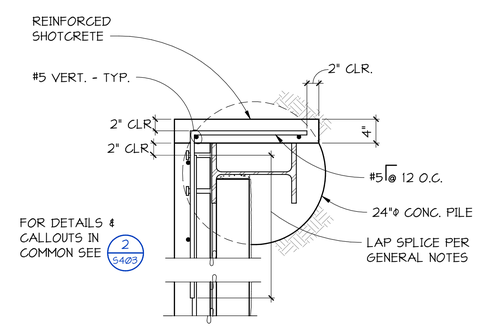

7 / S403 SECTION
1" = 1'-0"

MILLER HULL
The Miller Hull Partnership, LLP
Architecture and Planning
Polson Building
71 Columbia, Sixth Floor
Seattle, WA 98104
Phone: 206.682.6837
Contact: Name

PCS Structural Solutions
Seattle | Tacoma | Portland
www.pcs-structural.com

STAMP

MERCER ISLAND HOUSE: CASCADE

6838 96TH AVE SE
MERCER ISLAND, WA 98040

SUBMITTAL

100% CONSTRUCTION DOCUMENTS

February 24, 2023

REVISIONS

No.	Description	Date
1	BUILDING PERMIT RESUBMITTAL	10/27/22

Drawn: SMS
Checked: TJR
M|H Proj No.: A20.0085.00
Issue Date: February 24, 2023

SHEET

SHORING DETAILS
S403

C:_Revit Models\21201 Mercer Island Residence R2022 (Central)_DEHollar.rvt

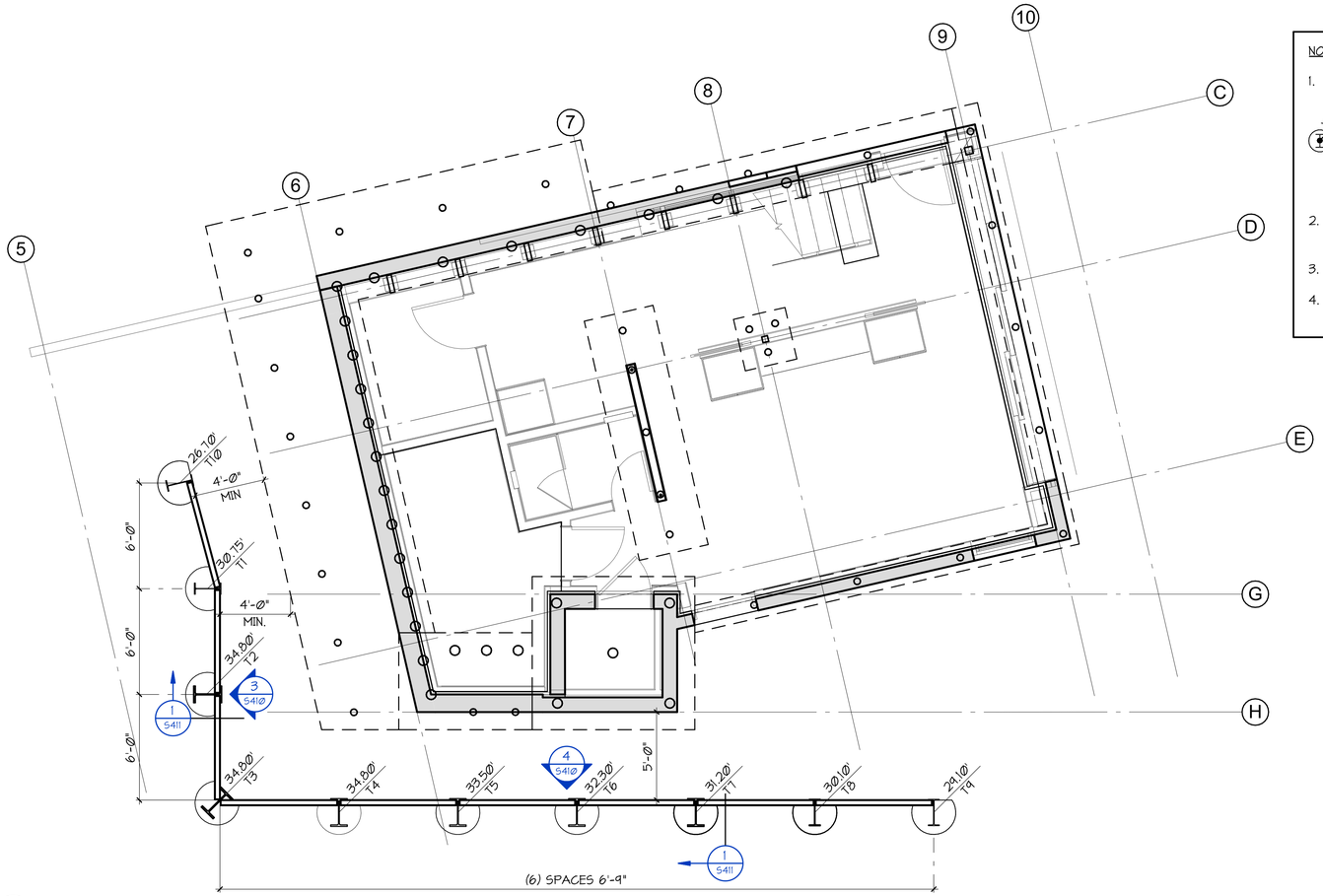

1 / S410 TEMPORARY SHORING PILE WALL PLAN
1/4" = 1'-0"

NOTES:

1. INDICATES TOP OF PILE ELEVATION FOR FABRICATION PURPOSES.

   INDICATES STEEL PILE TYPE. SEE SHEET S410 FOR SCHEDULES AND ELEVATIONS. SEE S411 FOR DETAILS.

2. BOTTOM OF EXCAVATION ELEVATION TO MATCH BOTTOM OF BUILDING FOUNDATION.

3. SEE CIVIL AND LANDSCAPE FOR WALL DETAILS

4. HORIZONTAL LOCATION OF SOLDIER PILES PER CIVIL

SOLDIER PILE SCHEDULE - TEMPORARY WALL

PILE #	PILE SIZE	DIAMETER	TOP OF PILE (1)	BOT. OF EXCAVATION (2)	D (FT.)	BOT. OF PILE
T1	W18x50	30"	30.75'	22.66'	13.00'	9.66'
T2	W18x119	30"	34.80'	22.66'	17.50'	5.16'
T3	W18x119	30"	34.80'	22.16'	17.50'	4.66'
T4	W18x119	30"	34.80'	22.16'	17.50'	4.66'
T5	W18x119	30"	33.50'	22.16'	17.50'	4.66'
T6	W18x119	30"	32.30'	22.16'	17.50'	4.66'
T7	W18x119	30"	31.20'	22.16'	17.50'	4.66'
T8	W18x50	30"	30.10'	25.10'	13.00'	12.10'
T9	W18x50	30"	29.10'	28.10'	13.00'	15.10'
T10	W18x50	30"	26.70'	22.66'	13.00'	9.66'

NOTE:
1. CONTRACTOR TO VERIFY TOP OF PILE ELEVATION WITH CIVIL DRAWINGS AND ALLOWABLE TEMPORARY SITE SLOPE.
2. CONTRACTOR TO VERIFY BOTTOM OF EXCAVATION WITH FOUNDATION PLANS AND DETAILS.

2 / S410 TEMPORARY SHORING PILE SCHEDULE
1" = 1'-0"

SUPPLEMENTAL TEMPORARY SOLDIER PILE WALL GENERAL NOTES

WOOD LAGGING:
HEM-FIR NO. 1 OR DOUGLAS FIR/LARCH NO. 2 OR BETTER GRADE. PRESSURE TREAT WITH CA-C, CCA, AQC OR ACZA, WITH 0.20 PCF MIN. RETENTION WITH APPROPRIATE INCISING. CONFORM TO 1999 APWA STANDARD C2. INSTALL LAGGING UNIFORMLY AND CONSISTENTLY HORIZONTAL. PROVIDE SINGLE FULL SPAN PIECES BETWEEN PILES. KEY EACH MEMBER BEHIND STEEL PILE FLANGES AS DETAILED. FIELD TREAT CUTS AND HOLES WITH COPPER NAPHTHENATE (9% SOLUTION), APPLIED LIBERALLY WITH 2 COATS.

SOLDIER PILES: ALL SOLDIER PILES SITUATED WITHIN FOUR VERTICAL FEET OR LESS OF THE ESTABLISHED GRADE SHALL BE REMOVED AT OR PRIOR TO COMPLETION OF CONSTRUCTION.

FOR THE DESIGN OF THIS WALL, THE MEANING OF TEMPORARY IS ONLY IN REFERENCE TO THE WALL RETAINING EARTH PRIOR TO THE INSTALLATION OF THE ADJACENT BUILDING WALL, WHICH WILL SERVE AS THE PERMANENT EARTH RETENTION MECHANISM ONCE IT IS IN PLACE. THE DESIGN OF THE TEMPORARY SOLDIER PILE WALL DOES NOT IMPLY ANY OTHER PORTION OF THE STRUCTURE HAS BEEN DESIGNED FOR TEMPORARY CONDITIONS. ALL OTHER PORTIONS OF THE STRUCTURE HAVE BEEN DESIGNED TO RESIST CODE SPECIFIED VERTICAL AND LATERAL FORCES AFTER THE CONSTRUCTION OF ALL STRUCTURAL ELEMENTS HAS BEEN COMPLETED. STABILITY OF THE STRUCTURE PRIOR TO COMPLETION IS THE SOLE RESPONSIBILITY OF THE GENERAL CONTRACTOR PER THE STRUCTURAL GENERAL NOTES.

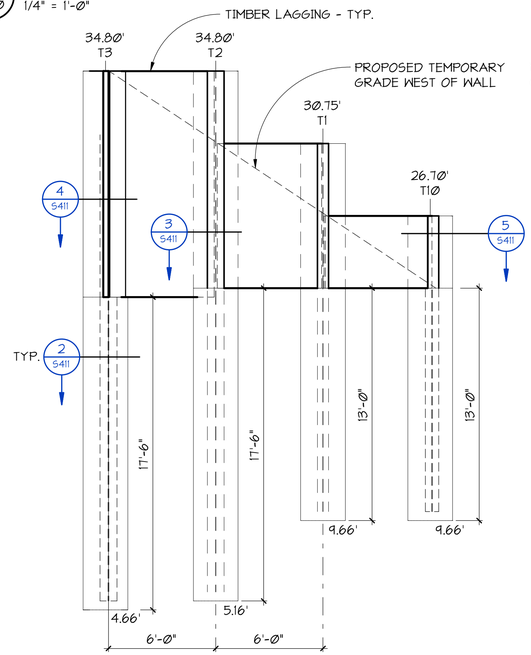

3 / S410 WALL ELEVATION
1/4" = 1'-0"

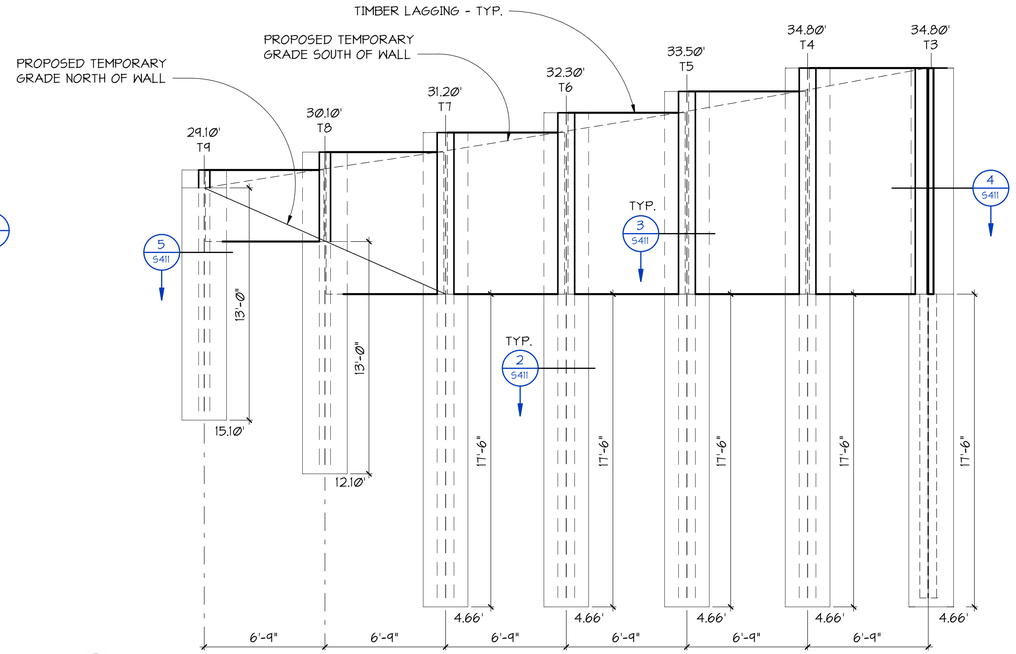

4 / S410 WALL ELEVATION
1/4" = 1'-0"

MILLER HULL
The Miller Hull Partnership, LLP
Architecture and Planning
Polson Building
71 Columbia, Sixth Floor
Seattle, WA 98104

Phone: 206.682.6837
Contact: Name

PCS Structural Solutions
Seattle | Tacoma | Portland
www.pcs-structural.com

STAMP

REVIEWED FOR CODE COMPLIANCE
March 27, 2023
SITE COPY

MERCER ISLAND HOUSE: CASCADE

6838 96TH AVE SE
MERCER ISLAND, WA 98040

SUBMITTAL

100% CONSTRUCTION DOCUMENTS

February 24, 2023

REVISIONS

No.	Description	Date
2	BUILDING PERMIT RESUBMITTAL 2	1/6/23

Drawn: DEH
Checked: TJR
M|H Proj No.: A20.0085.00

Issue Date: February 24, 2023

2

SHEET
TEMPORARY SHORING WALL PLANS & ELEVATIONS
S410

C:_Revit Models\21201 Mercer Island Residence R2022 (Central)_DEHollar.rvt

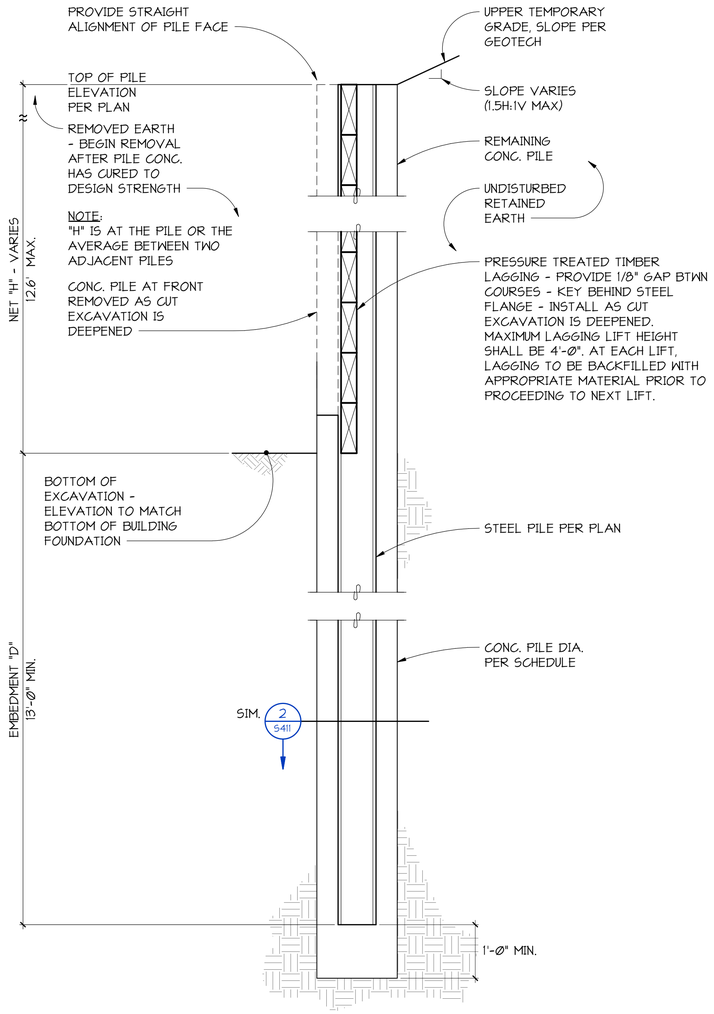

TYPICAL SOLDIER PILE RETAINING WALL

1 S411 SECTION
NO SCALE

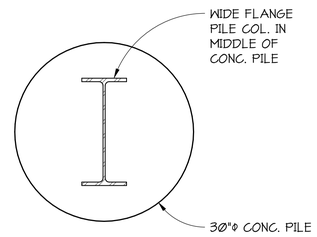

TYPICAL SOLDIER PILE

2 S411 SECTION
1" = 1'-0"

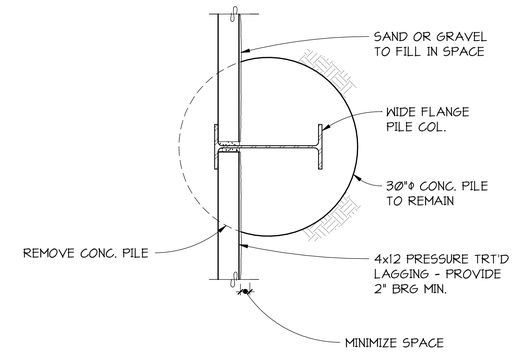

3 S411 SECTION
1" = 1'-0"

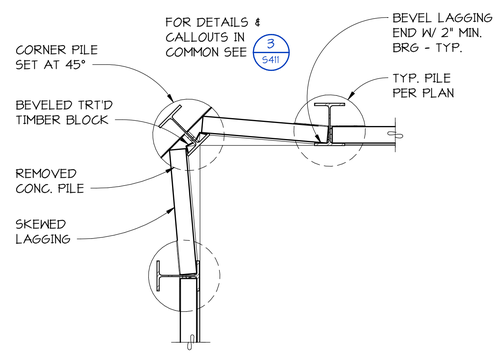

4 S411 SECTION
1/2" = 1'-0"

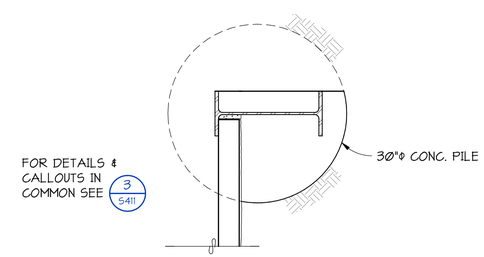

5 S411 SECTION
1" = 1'-0"

C:_Revit Models\21201 Mercer Island Residence R2022 (Central)_sweneey.rvt

MILLER HULL
The Miller Hull Partnership, LLP
Architecture and Planning
Polson Building
71 Columbia, Sixth Floor
Seattle, WA 98104
Phone: 206.682.6837
Contact: Name

PCS Structural Solutions
Seattle | Tacoma | Portland
www.pcs-structural.com

STAMP

REVIEWED FOR CODE COMPLIANCE
March 27, 2023
SITE COPY

MERCER ISLAND HOUSE: CASCADE

6838 96TH AVE SE
MERCER ISLAND, WA 98040

SUBMITTAL

100% CONSTRUCTION DOCUMENTS

February 24, 2023

REVISIONS

No.	Description	Date
2	BUILDING PERMIT RESUBMITTAL 2	1/6/23

Drawn: DEH
Checked: TJR
M|H Proj No.: A20.0085.00
Issue Date: February 24, 2023

2

SHEET

TEMPORARY SHORING WALL DETAILS

S411

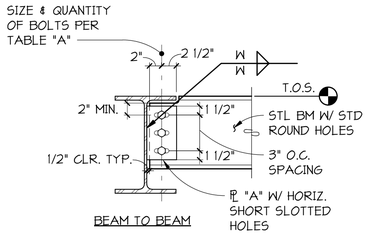

BEAM TO BEAM

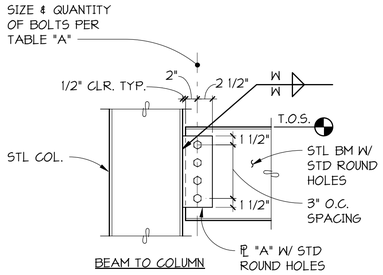

BEAM TO COLUMN

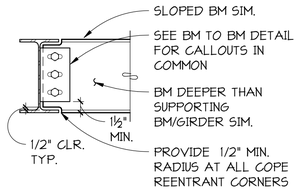

BEAM TO BEAM SAME DEPTH

TABLE A			
SUPPORTED BEAM SIZE	QUANTITY OF 7/8" DIAMETER A325N BOLTS	SHEAR PLATE THICKNESS "A"	WELD "W"
W10	2	3/8"	5/16"
W12	3	3/8"	5/16"

TYPICAL STEEL DETAIL

1 / S501 **DETAIL**
NO SCALE

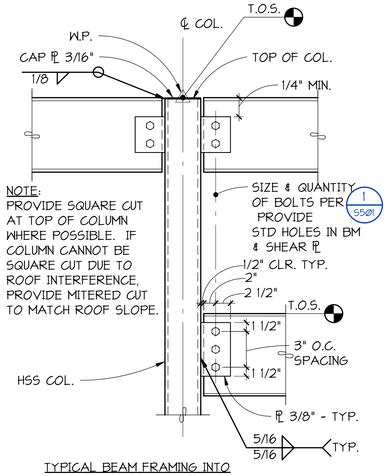

TYPICAL BEAM FRAMING INTO HOLLOW STRUCTURAL STEEL COLUMN

2 / S501 **DETAIL**
NO SCALE

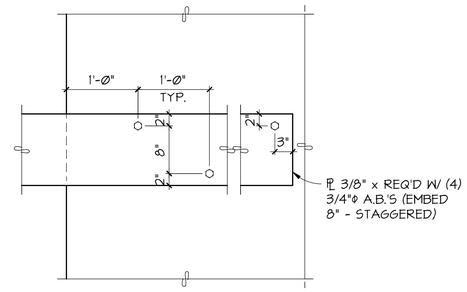

NOTE:
PROVIDE ADD'L HORIZ. REINF. @ A.B. - TYP.

3 / S501 **DETAIL**
1" = 1'-0"

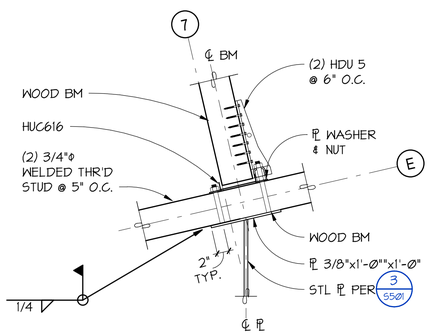

4 / S501 **PLAN DETAIL**
1" = 1'-0"

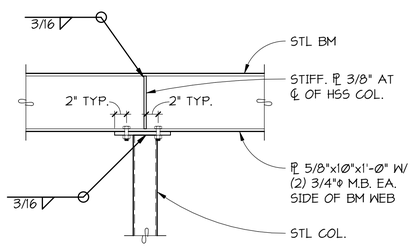

5 / S501 **DETAIL**
1" = 1'-0"

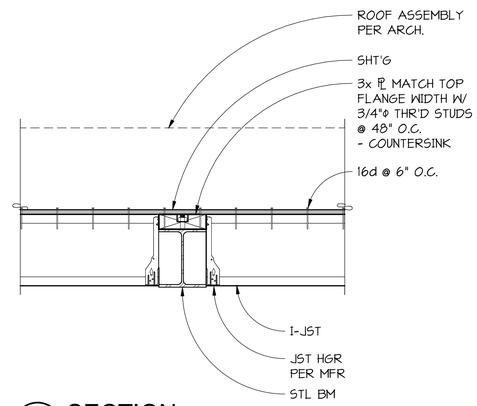

6 / S501 **SECTION**
1" = 1'-0"

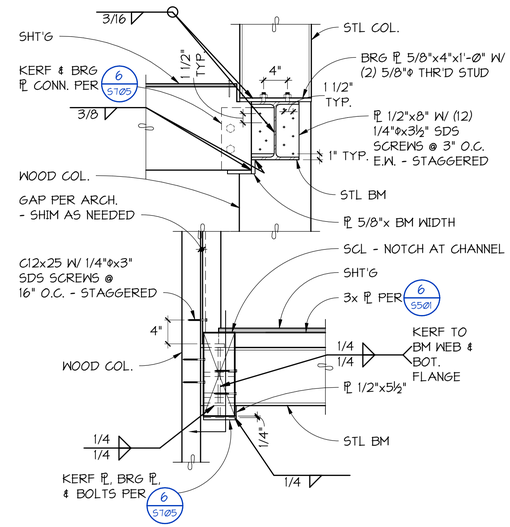

7 / S501 **DETAIL**
1" = 1'-0"

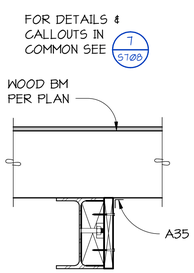

8 / S501 **SECTION**
1" = 1'-0"

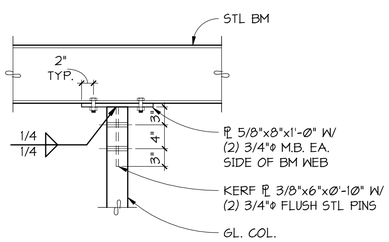

9 / S501 **DETAIL**
NO SCALE

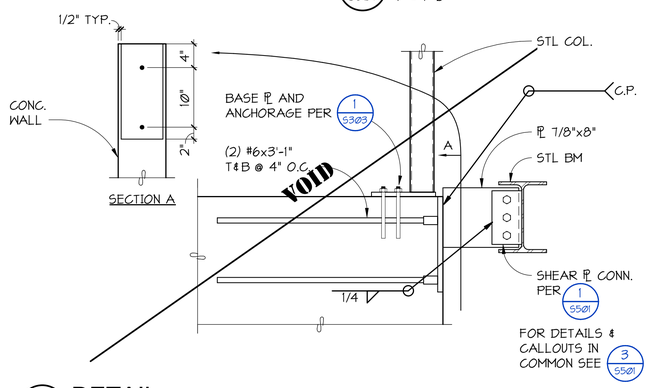

10 / S501 **DETAIL**
1" = 1'-0"

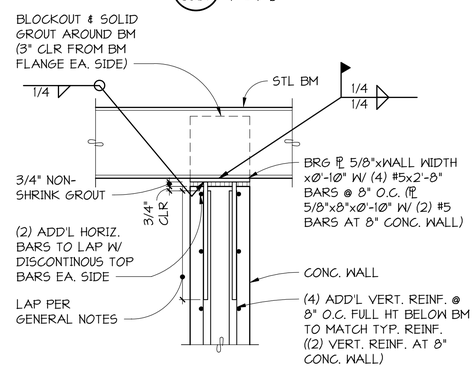

11 / S501 **SECTION**
1" = 1'-0"

C:_Revit Models\21201 Mercer Island Residence R2022 (Central)_DEHollar.rvt

MILLER HULL
The Miller Hull Partnership, LLP
Architecture and Planning
Polson Building
71 Columbia, Sixth Floor
Seattle, WA 98104

Phone: 206.682.6837
Contact: Name

PCS Structural Solutions
Seattle | Tacoma | Portland
www.pcs-structural.com

STAMP

MERCER ISLAND HOUSE: CASCADE

6838 96TH AVE SE
MERCER ISLAND, WA 98040

SUBMITTAL

100% CONSTRUCTION DOCUMENTS

February 24, 2023

REVISIONS

No.	Description	Date

Drawn: DEH
Checked: TJR
M|H Proj No.: A20.0085.00
Issue Date: February 24, 2023

SHEET

STEEL FRAMING DETAILS
S501

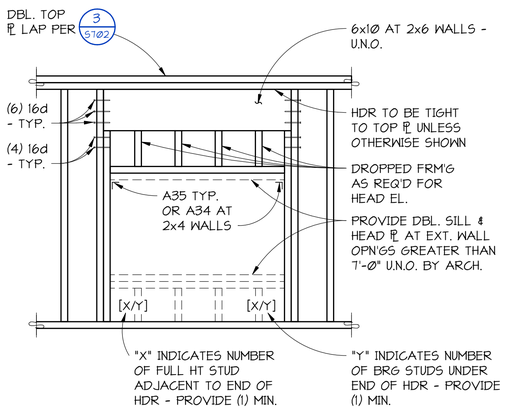

TYPICAL STUD WALL CONSTRUCTION AT HEADER

1/S701 **SECTION**
NO SCALE

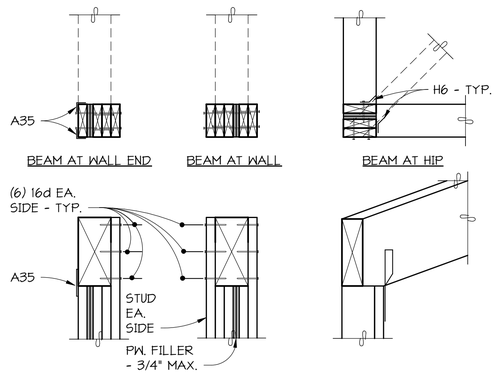

TYPICAL BUILT-UP COLUMN AT BEAM PERPENDICULAR TO WALL

2/S701 **DETAIL**
NO SCALE

DIAPHRAGM NAILING SCHEDULE			
DIAPHRAGM TYPE	LOCATION	NAILS	SPACING
FLOOR DIAPHRAGM 1⅛" WARMBOARD OR 3/4" TONGUE AND GROOVE SHEATHING UNBLOCKED UNLESS NOTED OTHERWISE	DIAPHRAGM BOUNDARY	10d	6" O.C.
	FIELD NAILS	10d	12" O.C.
	SUPPORTED PANEL EDGES	10d	6" O.C.

NOTES:
1. PROVIDE (2) ROWS OF SPECIFIED DIAPHRAGM BOUNDARY NAILING OVER INTERIOR SHEAR WALLS AND THE FULL LENGTH OF "COLLECTORS" WHERE INDICATED.
2. AT BLOCKED DIAPHRAGMS PROVIDE 2x4 FLATWISE BLOCKING WITH "Z2" CLIPS AT EACH END AT ALL UNSUPPORTED PANEL EDGES. USE 2x4 STRUCTURAL COMPOSITE LUMBER FLATWISE BLOCKING IN LIEU OF SOLID SAWN WHERE NAILING SIZE OR SPACING EXCEEDS 10d AT 4" ON CENTER.

TYPICAL DIAPHRAGM NAILING

3/S701 **SCHEDULE**
NO SCALE

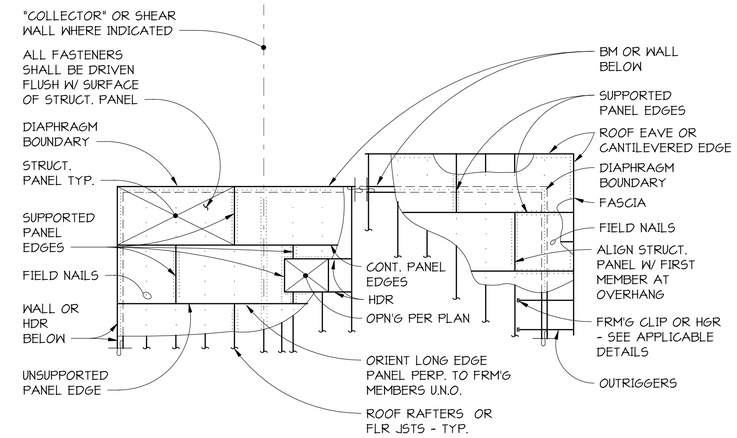

STUD WALL CONSTRUCTION SCHEDULE									
TABLE 1 - SHEAR WALL REQUIREMENTS									
MARK	WALL SHEATHING	SIDES WITH SHEATHING	SHEATHING NAILS NOTE 2	EDGE NAILING ON CENTER	EDGE FRAMING NOTE 5	FIELD NAILING ON CENTER	BOTTOM PLATE NOTE 6	BOTTOM PLATE NAILING	5/8" ANCHOR BOLT SPACING (EMBED 7" MINIMUM)	RIM/BLOCKING CONNECTOR TO TOP PLATE BELOW
A	1/2"	(1)	10d	6"	2x	12"	2x	16d @ 8" O.C.	48"	A35 @ 20" O.C.
B	1/2"	(1)	10d	4"	3x	12"	2x	16d @ 8" O.C.	32"	A35 @ 16" O.C.
C	1/2"	(1)	10d	3"	3x	12"	2x	SDS @ 6" O.C.	24"	A35 @ 12" O.C.

INDICATES SPECIAL SHEAR WALL REQUIREMENTS PER TABLE 1

NOTES:
1. (X) INDICATES SPECIAL STRUCTURAL WALL MARK. ALL WALLS SHOWN ON STRUCTURAL DRAWINGS ARE 2x6 AT 16" ON CENTER UNLESS DESIGNATED SPECIAL. STUD LAYOUT SHALL MATCH FRAMING MEMBER LAYOUT ABOVE WHERE APPLICABLE. ALL EXTERIOR WALLS SHALL HAVE 1/2" WOOD SHEATHING AND BE NAILED WITH 10d AT 6" ON CENTER AT EDGES AND 12" ON CENTER IN FIELD UNLESS DESIGNATED SPECIAL.
2. ALL EXTERIOR WALLS AND ALL DESIGNATED SHEAR WALLS SHALL BE BLOCKED AT ALL SHEATHING EDGES. EDGE NAILING APPLIES TO ALL TOP AND BOTTOM PLATES, VERTICAL JOINTS, HORIZONTAL BLOCKED JOINTS, WALL CORNERS, AND HOLDOWN ANCHORED STUDS.
3. WHERE BEAMS OR HEADERS FRAME INTO WALLS AND A COLUMN IS NOT CALLED OUT, PROVIDE BUILT-UP COLUMNS PER 2/S701 FOR BEAM PERPENDICULAR TO WALL.
4. [X/Y] INDICATES BUILT-UP STUD COLUMNS AT HEADERS IN WALLS - SEE 2/S701 FOR BEAM PARALLEL TO WALL.
5. PROVIDE 3x OR DOUBLE 2x MEMBERS FACE NAILED PER 5/S701 AT ALL ABUTTING PANEL EDGES WHERE INDICATED.
6. 3x BOTTOM PLATE WHERE INDICATED.
7. WHERE SOLID SAWN STUD LENGTH CANNOT BE OBTAINED, STRUCTURAL COMPOSITE LUMBER STUDS MAY BE SUBSTITUTED. SOLID SAWN FRAMING MAY NOT BE SUBSTITUTED FOR SPECIFIED STRUCTURAL COMPOSITE LUMBER FRAMING.

4/S701 **SCHEDULE**
NO SCALE

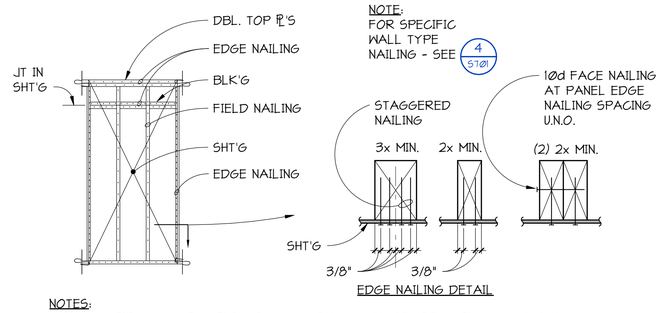

NOTES:
1. PANEL EDGE NAILING AND PLATE NAILING SHALL BE STAGGERED IN ALL CASES.
2. SHEATHING JOINT SHALL OCCUR AT COMMON MEMBER UNLESS IT OCCURS AT A SPECIFIED DOUBLE MEMBER.
3. EDGE NAILING APPLIES TO AREAS INDICATED AND AT HOLDOWN ANCHORED STUDS.

TYPICAL SHEAR WALL NAILING

5/S701 **SECTION**
NO SCALE

MILLER HULL
The Miller Hull Partnership, LLP
Architecture and Planning
Polson Building
71 Columbia, Sixth Floor
Seattle, WA 98104
Phone: 206.682.6837
Contact: Name

PCS Structural Solutions
Seattle | Tacoma | Portland
www.pcs-structural.com

STAMP

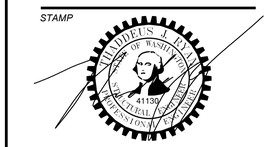

MERCER ISLAND HOUSE: CASCADE

6838 96TH AVE SE
MERCER ISLAND, WA 98040

SUBMITTAL

100% CONSTRUCTION DOCUMENTS

February 24, 2023

REVISIONS

No.	Description	Date

Drawn: DEH
Checked: TJR
M|H Proj No.: A20.0085.00
Issue Date: February 24, 2023

SHEET

WOOD FRAMING DETAILS
S701

C:_Revit Models\21201 Mercer Island Residence R2022 (Central)_DEHollar.rvt

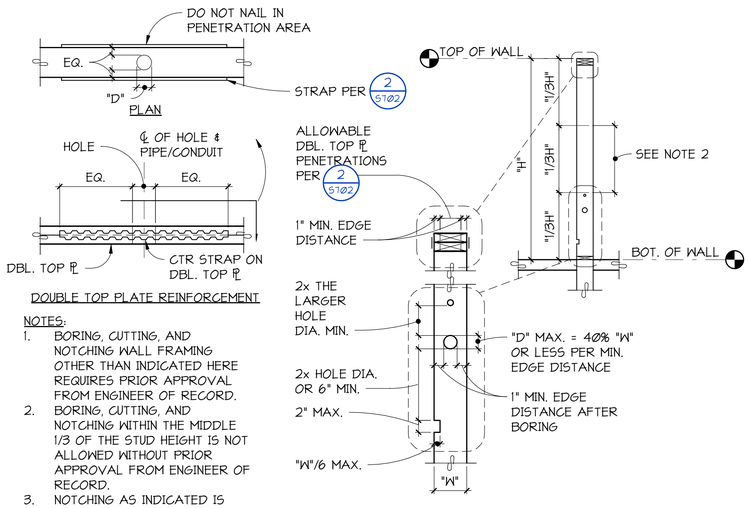

DOUBLE TOP PLATE REINFORCEMENT

NOTES:

1. BORING, CUTTING, AND NOTCHING WALL FRAMING OTHER THAN INDICATED HERE REQUIRES PRIOR APPROVAL FROM ENGINEER OF RECORD.
2. BORING, CUTTING, AND NOTCHING WITHIN THE MIDDLE 1/3 OF THE STUD HEIGHT IS NOT ALLOWED WITHOUT PRIOR APPROVAL FROM ENGINEER OF RECORD.
3. NOTCHING AS INDICATED IS PERMITTED ON ONE FACE OF THE WALL ALONE.
4. MAXIMUM BORED HOLE DIAMETER IN STUD "D" MAXIMUM. LIMITED TO 25%.

"W" AT BUILT-UP STUDS, AND HOLDOWN ANCHORED STUDS.

ALLOWABLE LOAD BEARING/SHEAR WALL STUD BORING, CUTTING, AND NOTCHING

1 S702 DETAIL
NO SCALE

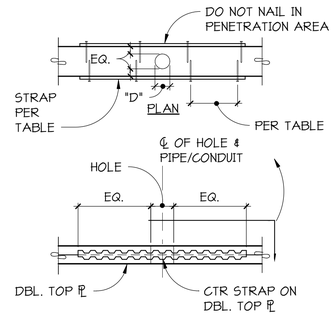

PLATE SIZE	HOLE DIAMETER "D" INCHES	STRAP
2x6	Ø" < "D" < 2½" 2½" ≤ "D" ≤ 3⅜"	NO STRAP REQ'D (2) ST2215 W/ (8) 16d EA. END

TYPICAL REINFORCING AT WALL DOUBLE TOP PLATE PENETRATIONS

2 S702 DETAIL
NO SCALE

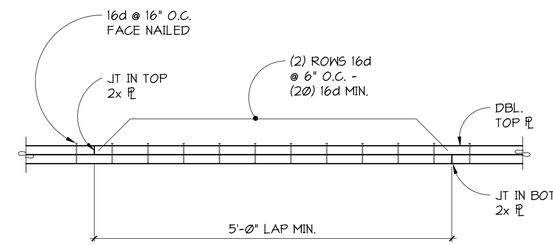

3 S702 SECTION
NO SCALE

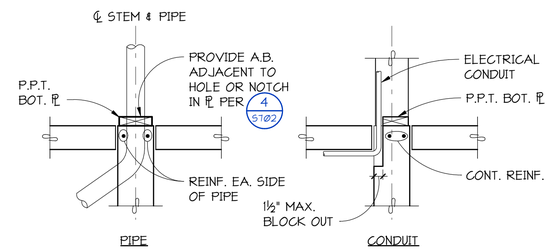

TYPICAL VERTICAL PENETRATIONS IN STEM WALL

5 S702 DETAIL
NO SCALE

NOTES:

1. BOTTOM SILL PLATE SHALL BE PRESERVATIVE PRESSURE TREATED - SEE GENERAL NOTES FOR GALVANIZED REQUIREMENTS FOR CONNECTORS AND FASTENERS.
2. HOLES IN BOTTOM PLATE SHALL BE A MINIMUM OF 1/32" TO A MAXIMUM OF 1/16" LARGER THAN THE BOLT DIAMETER.
3. HOLES, CUTS, AND NOTCHES IN 3x OR 4x PRESERVATIVE PRESSURE PLATES SHALL BE TREATED WITH A 9% SOLUTION OF COPPER NAPHTHENATE.
4. OVERSIZE WASHERS MAY BE USED IN LIEU OF BPS.
5. STAGGER ANCHOR BOLTS AT DOUBLE SHEATHED SHEAR WALLS.

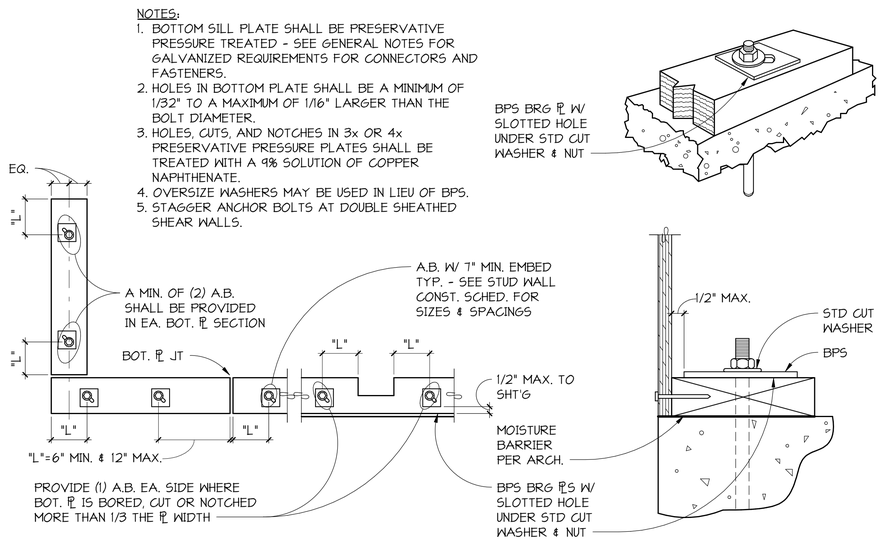

TYPICAL BOTTOM PLATE ANCHORAGE

4 S702 DETAIL
NO SCALE

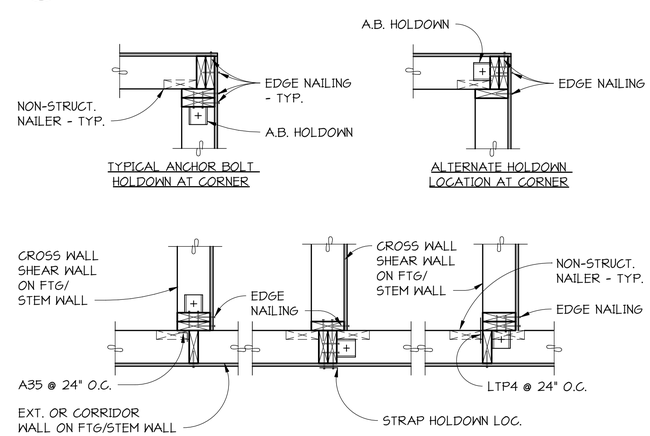

TYPICAL CROSS WALL HOLDOWN LOCATIONS

6 S702 PLAN DETAIL
NO SCALE

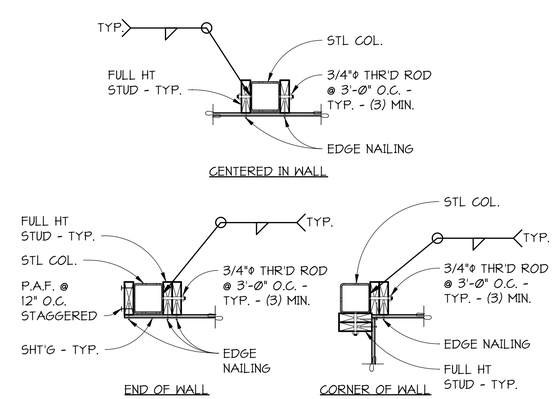

TYPICAL STEEL COLUMN IN SHEAR WALL

7 S702 DETAIL
NO SCALE

C:_Revit Models\21201 Mercer Island Residence R2022 (Central)_DEHollar.rvt

MILLER HULL

The Miller Hull Partnership, LLP
Architecture and Planning
Polson Building
71 Columbia, Sixth Floor
Seattle, WA 98104

Phone: 206.682.6837
Contact: Name

PCS Structural Solutions
Seattle | Tacoma | Portland
www.pcs-structural.com

STAMP

MERCER ISLAND HOUSE: CASCADE

6838 96TH AVE SE
MERCER ISLAND, WA 98040

SUBMITTAL

100% CONSTRUCTION DOCUMENTS

February 24, 2023

REVISIONS

No.	Description	Date

Drawn: DEH
Checked: TJR
M|H Proj No.: A20.0085.00

Issue Date: February 24, 2023

SHEET

WOOD FRAMING DETAILS
S702

HOLDOWN SCHEDULE

MARK	HOLDOWN[2]	ANCHOR ROD [3] FOUNDATION ANCHOR ROD TYPE [1]		REQUIRED STUDS	REFERENCED DETAILS
		DIAMETER	REINFORCEMENT[4]		
2	HDU2	5/8"	(2) #4	(2) 2x	2/S703 & 6/S702
4	HDU4	5/8"	(2) #4	(2) 2x	2/S703 & 6/S702
5	HDU5	5/8"	(2) #4	(2) 2x	2/S703 & 6/S702
8	HDU8	7/8"	(2) #4	(3) 2x	2/S703 & 6/S702

NOTES:
1. ALL HOLDOWNS SHALL BE INSTALLED PER MANUFACTURER'S RECOMMENDATIONS.
2. PROVIDE BACK TO BACK ANCHOR ROD HOLDOWNS ACROSS FLOOR LINE PER 3/S703.
3. ALL-THREAD ROD ASTM A36 WITH 3"x3"x3/8" PLATE WITH DOUBLE NUTS AT FOUNDATION.
4. EMBEDMENT MAY REQUIRE STEPPING DOWN FOOTING PER 5/S301 TO ACHIEVE REQUIRED EMBEDMENT.

1 S703 SCHEDULE
NO SCALE

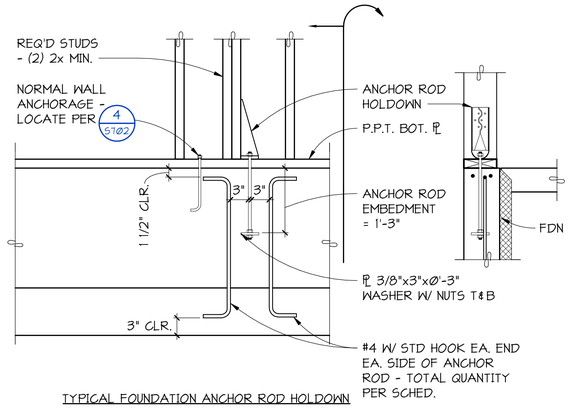

TYPICAL FOUNDATION ANCHOR ROD HOLDOWN

2 S703 DETAIL
NO SCALE

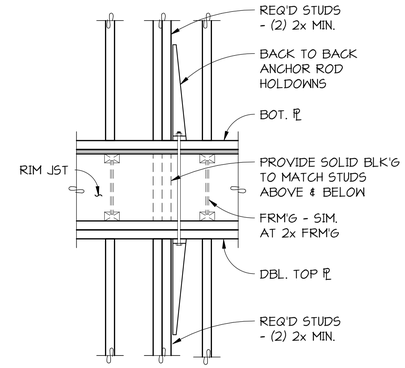

TYPICAL FLOOR TO FLOOR ANCHOR ROD HOLDOWN

3 S703 DETAIL
NO SCALE

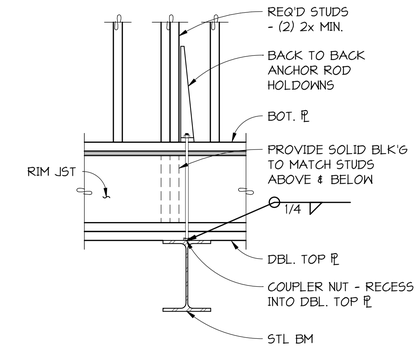

4 S703 DETAIL
1" = 1'-0"

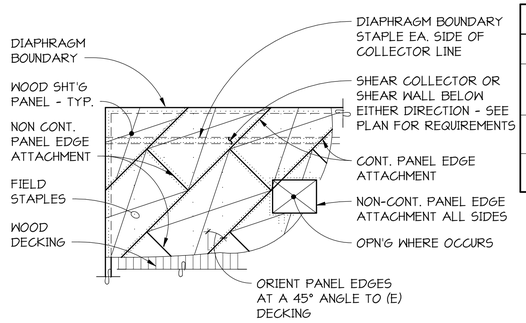

TYPICAL DIAPHRAGM ATTACHMENT ABOVE 2x MINIMUM WOOD DECKING

5 S703 PLAN
1" = 1'-0"

DIAPHRAGM ATTACHMENT SCHEDULE

LOCATION	SPACING
DIAPHRAGM BOUNDARY AND CONTINUOUS PANEL EDGES	2½" O.C. U.N.O.
FIELD STAPLES (EACH WAY)	10" O.C.
NON-CONTINUOUS PANEL EDGES	4" O.C.

NOTES:
1. ATTACHMENT IS WITH 16 GAUGE x 1½" MINIMUM STAPLES WITH 7/16" CROWN MINIMUM.
2. MINIMUM STAPLE LENGTH SHALL BE WOOD PANEL THICKNESS +1".
3. ALL FASTENERS SHALL BE DRIVEN FLUSH WITH SURFACE OF STRUCTURAL PANEL - DO NOT OVER DRIVE.

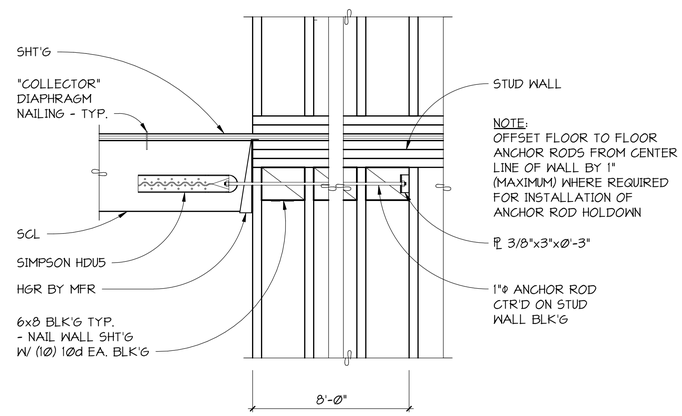

6 S703 DETAIL
NO SCALE

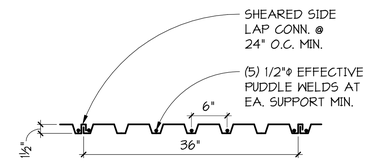

TYPE "B" DECK PROPERTIES

GAGE	I = (in.^{4}/ft.)	+S/-S = (in.^{3}/ft.)
20	.219	.230/.237
18	.302	.314/.331
16	.381	.394/.410

NOTES:
1. AT SUPPORTS PARALLEL TO CORRUGATIONS, PROVIDE PUDDLE WELDS AT 24" ON CENTER MAXIMUM.
2. "SHEARED SIDE LAP" CONNECTION REFERS TO "PUNCHLOK" BY VERCO DECKING, INC. OR "DELTAGRIP" BY ASC STEEL DECK, OR PREAPPROVED EQUAL.
3. MINIMUM DECK PROPERTIES AND WELD PATTERN SHOWN.
4. SECTION PROPERTIES ARE BASED ON Fy = 50 KSI.

TYPICAL ROOF METAL DECK

7 S703 SECTION
1" = 1'-0"

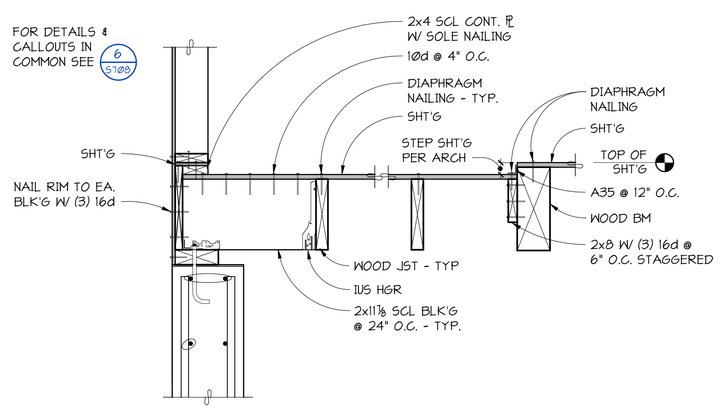

8 S703 SECTION
1" = 1'-0"

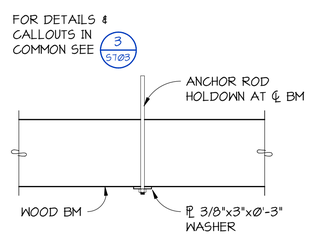

9 S703 SECTION
1" = 1'-0"

C:_Revit Models\21201 Mercer Island Residence R2022 (Central)_DEHollar.rvt

MILLER HULL
The Miller Hull Partnership, LLP
Architecture and Planning
Polson Building
71 Columbia, Sixth Floor
Seattle, WA 98104
Phone: 206.682.6837
Contact: Name

PCS Structural Solutions
Seattle | Tacoma | Portland
www.pcs-structural.com

STAMP

REVIEWED FOR CODE COMPLIANCE
March 27, 2023
SITE COPY

MERCER ISLAND HOUSE: CASCADE

6838 96TH AVE SE
MERCER ISLAND, WA 98040

SUBMITTAL

100% CONSTRUCTION DOCUMENTS

February 24, 2023

REVISIONS

No.	Description	Date

Drawn: DEH
Checked: TJR
M|H Proj No.: A20.0085.00
Issue Date: February 24, 2023

SHEET

WOOD FRAMING DETAILS
S703

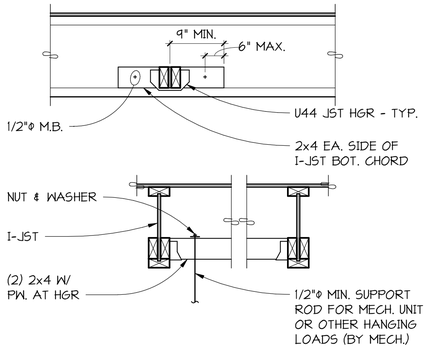

NOTES:
1. ALL FRAMING SHOWN BY GENERAL CONTRACTOR (EXCEPT BY SPRINKLER CONTRACTOR IF USED FOR SPRINKLER LINES.)
2. DO NOT CUT OR DRILL THROUGH JOIST.
3. MAXIMUM SUPPORT LOAD 500 POUNDS.

TYPICAL DETAIL FOR HANGING LOADS FROM I-JOIST (ALL HEAT PUMPS OR FANS OVER 90 POUNDS)

1 / S704 SECTION
NO SCALE

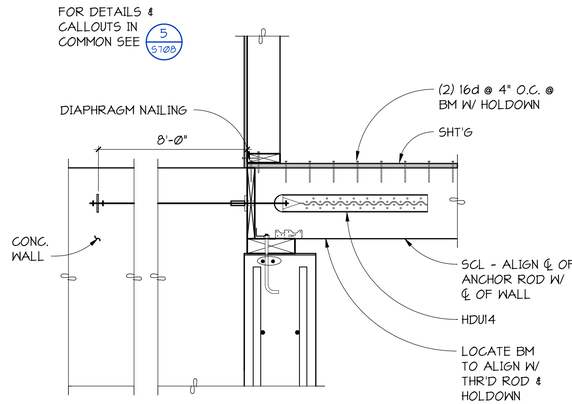

2 / S704 DETAIL
1" = 1'-0"

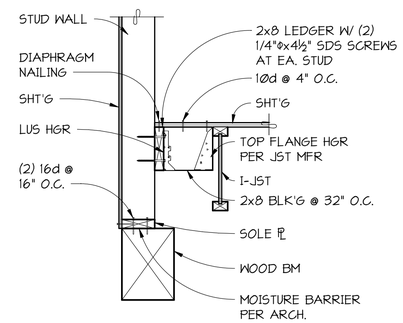

3 / S704 SECTION
1" = 1'-0"

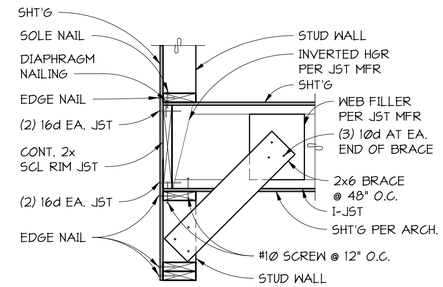

4 / S704 SECTION
NO SCALE

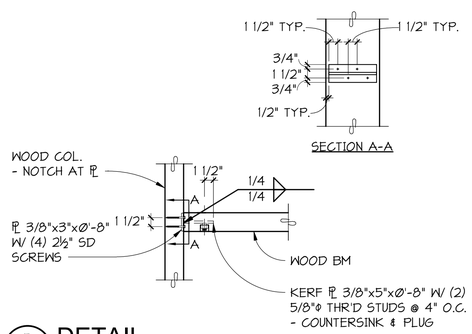

5 / S704 DETAIL
NO SCALE

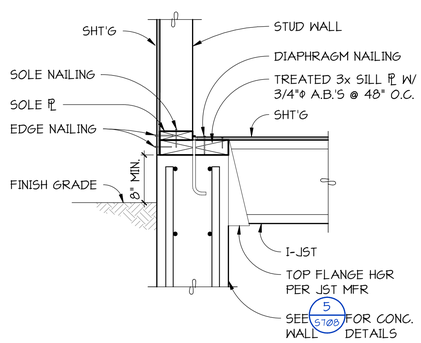

6 / S704 SECTION
NO SCALE

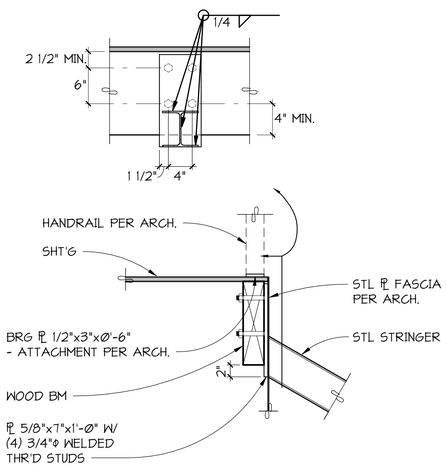

7 / S704 DETAIL
NO SCALE

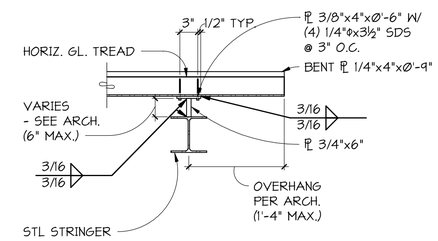

8 / S704 SECTION
NO SCALE

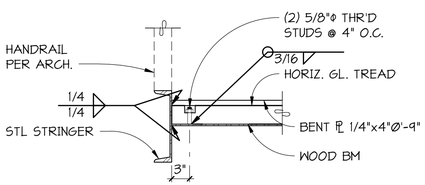

9 / S704 SECTION
NO SCALE

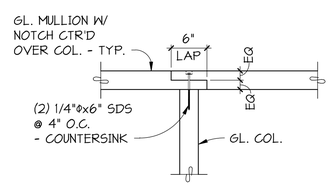

10 / S704 SECTION
NO SCALE

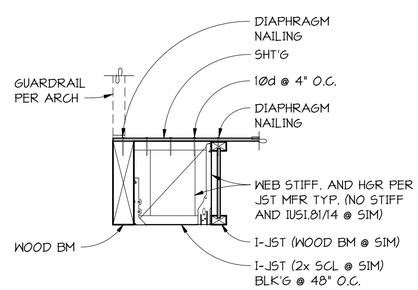

11 / S704 SECTION
NO SCALE

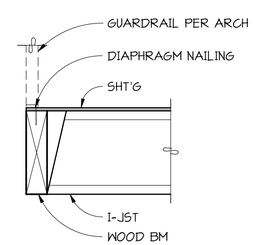

12 / S704 SECTION
NO SCALE

C:_Revit Models\21201 Mercer Island Residence R2022 (Central)_DEHollar.rvt

MILLER HULL
The Miller Hull Partnership, LLP
Architecture and Planning
Polson Building
71 Columbia, Sixth Floor
Seattle, WA 98104

Phone: 206.682.6837
Contact: Name

PCS Structural Solutions
Seattle | Tacoma | Portland
www.pcs-structural.com

STAMP

REVIEWED FOR CODE COMPLIANCE
March 27, 2023
SITE COPY

MERCER ISLAND HOUSE: CASCADE

6838 96TH AVE SE
MERCER ISLAND, WA 98040

SUBMITTAL

100% CONSTRUCTION DOCUMENTS

February 24, 2023

REVISIONS

No.	Description	Date

Drawn: DEH
Checked: TJR
M|H Proj No.: A20.0085.00

Issue Date: February 24, 2023

SHEET

WOOD FRAMING DETAILS
S704

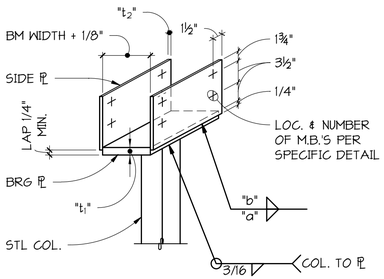

BEAM WIDTH	BEARING PLATE "t1"	SIDE PLATE "t2"	WELD "a"	WELD "b"	MINIMUM M.B. SIZE
3⅛, 3½	1/2"	3/16"	3/16"	----	3/4"
5⅛, 5¼	5/8"	3/16"	3/16"	----	3/4"

TYPICAL GLULAM BEAM BEARING CONNECTION ASSEMBLY

1 / S705 DETAIL
NO SCALE

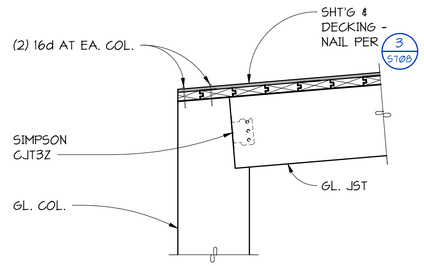

2 / S705 SECTION
1" = 1'-0"

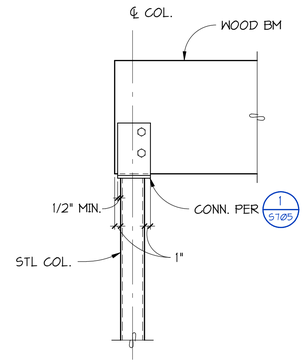

TYPICAL SINGLE GLULAM BEAM TO COLUMN CONNECTION

3 / S705 SECTION
NO SCALE

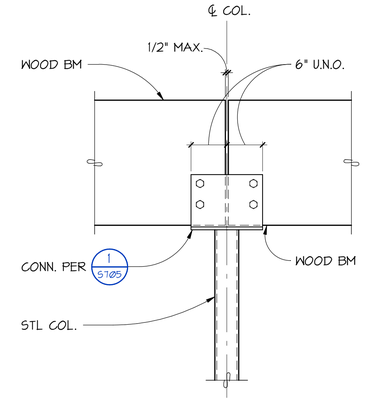

TYPICAL GLULAM BEAM TO COLUMN CONNECTION WITH BEAM DEPTHS EQUAL

4 / S705 SECTION
NO SCALE

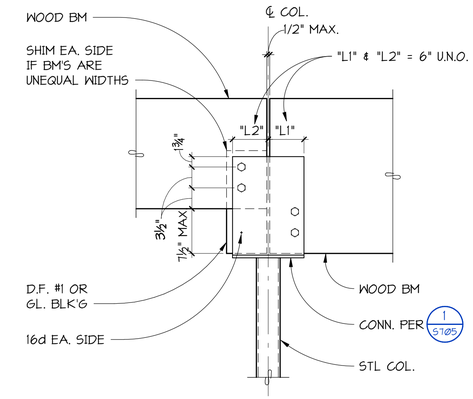

TYPICAL GLULAM BEAM TO COLUMN CONNECTION WITH BEAM DEPTHS UNEQUAL BY 7½" OR LESS

5 / S705 SECTION
NO SCALE

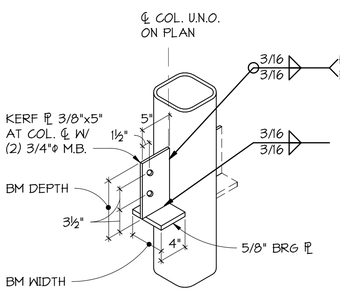

NOTES:
1. AT TOP OF COLUMN PROVIDE 3/16" END PLATE W/ PERIMETER WELD UNLESS OTHERWISE NOTED.
2. RECESS BOLT HEADS AND NUTS AS REQUIRED FOR FINISHES.
3. DAP GLULAM BEAM FOR FLUSH BEARING PLATE AT EXPOSED CONDITION.

6 / S705 DETAIL
NO SCALE

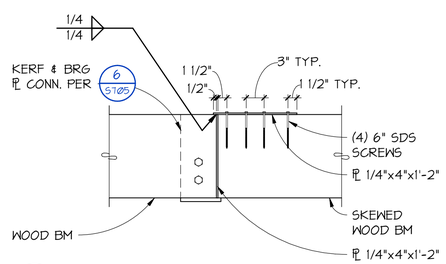

7 / S705 DETAIL
1" = 1'-0"

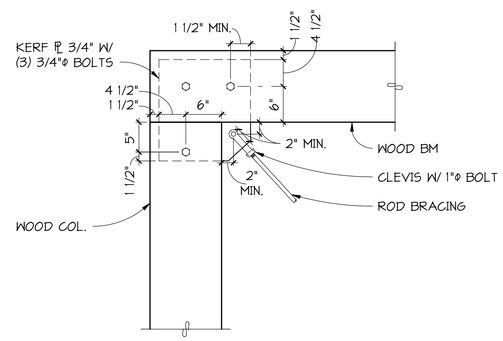

8 / S705 DETAIL
NO SCALE

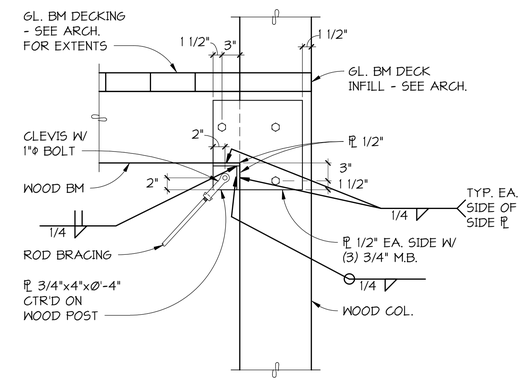

9 / S705 DETAIL
NO SCALE

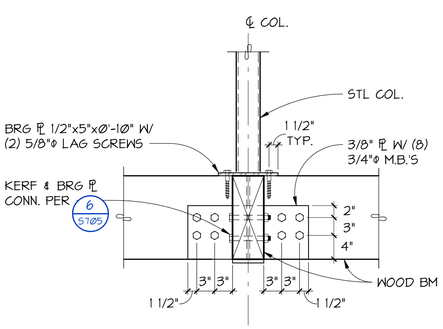

10 / S705 DETAIL
1" = 1'-0"

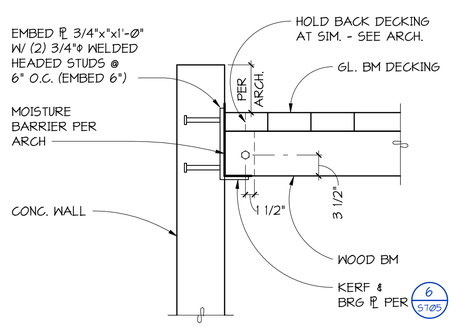

11 / S705 SECTION
NO SCALE

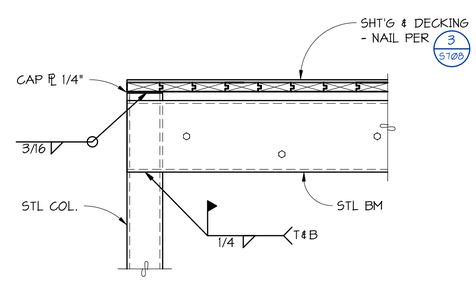

12 / S705 DETAIL
NO SCALE

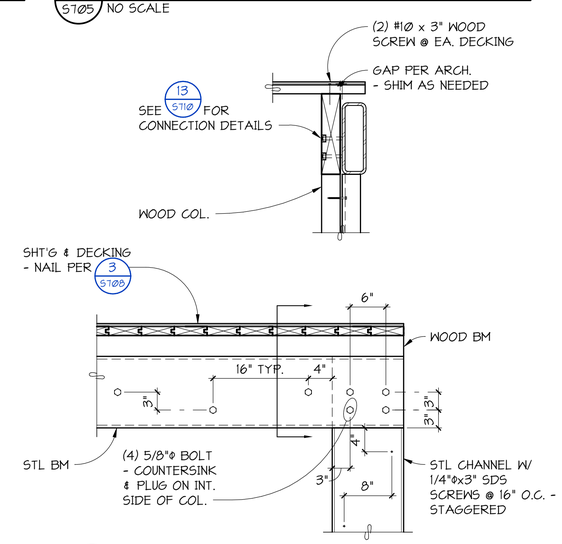

13 / S705 DETAIL
NO SCALE

C:_Revit Models\21201 Mercer Island Residence R2022 (Central)_DEHollar.rvt

MILLER HULL
The Miller Hull Partnership, LLP
Architecture and Planning
Polson Building
71 Columbia, Sixth Floor
Seattle, WA 98104

Phone: 206.682.6837
Contact: Name

PCS Structural Solutions
Seattle | Tacoma | Portland
www.pcs-structural.com

STAMP

MERCER ISLAND HOUSE: CASCADE

6838 96TH AVE SE
MERCER ISLAND, WA 98040

SUBMITTAL

100% CONSTRUCTION DOCUMENTS

February 24, 2023

REVISIONS

No.	Description	Date

Drawn: DEH
Checked: TJR
M|H Proj No.: A20.0085.00

Issue Date: February 24, 2023

SHEET

WOOD FRAMING DETAILS

S705

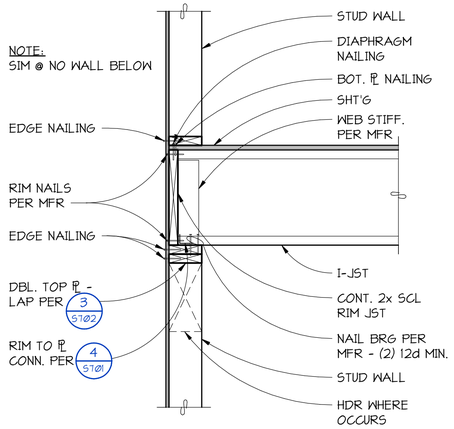

TYPICAL I-JOIST BEARING AT EXTERIOR WALL

1/S706 SECTION
NO SCALE

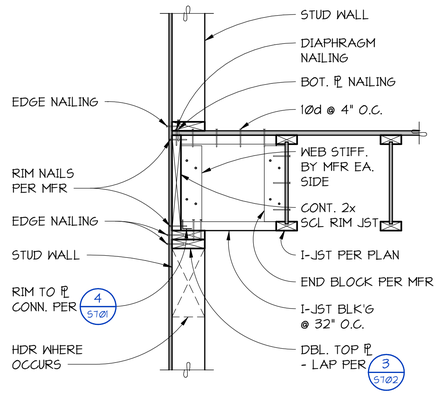

TYPICAL I-JOIST BLOCKING PARALLEL TO EXTERIOR WALL

2/S706 SECTION
NO SCALE

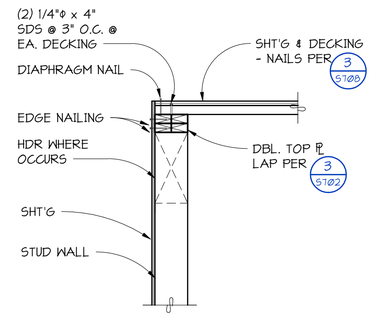

3/S706 SECTION
1" = 1'-0"

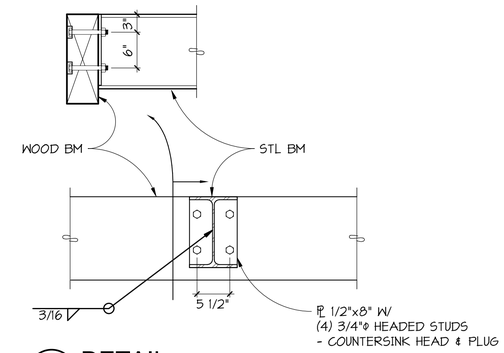

4/S706 DETAIL
1" = 1'-0"

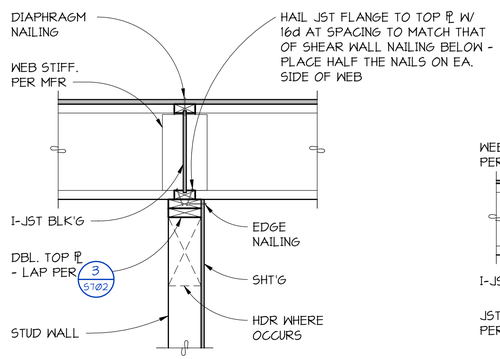

TYPICAL I-JOIST AT BEARING STUD WALL

5/S706 SECTION
NO SCALE

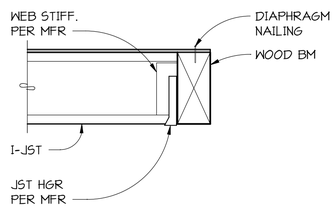

TYPICAL I-JOIST BEARING AT BEAM (ONE SIDE)

6/S706 SECTION
NO SCALE

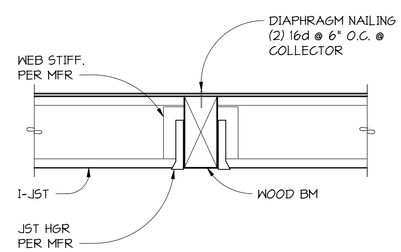

TYPICAL I-JOIST BEARING AT BEAM (EACH SIDE)

7/S706 SECTION
NO SCALE

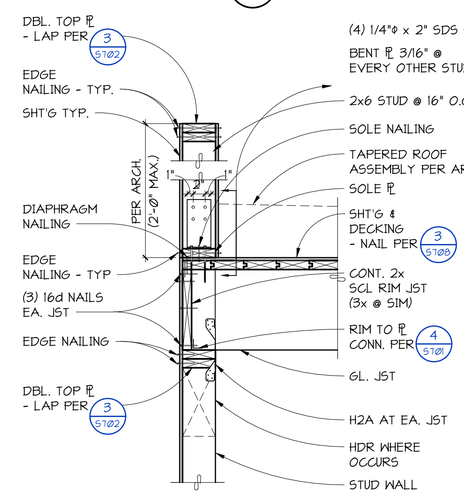

8/S706 SECTION
1" = 1'-0"

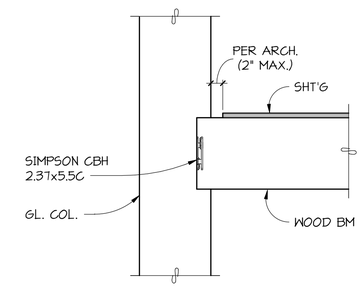

9/S706 SECTION
1" = 1'-0"

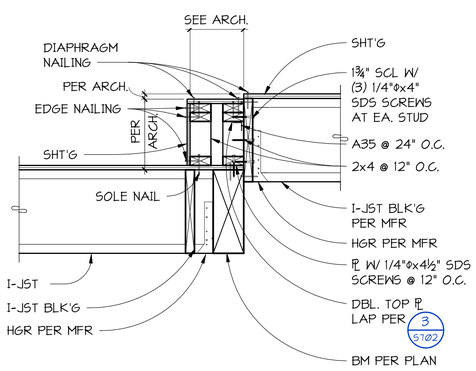

FLOOR STEP

10/S706 SECTION
1" = 1'-0"

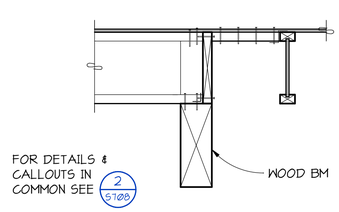

11/S706 SECTION
1" = 1'-0"

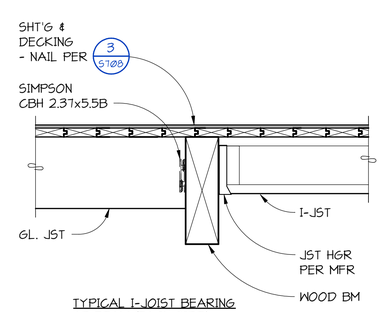

TYPICAL I-JOIST BEARING AT BEAM (EACH SIDE)

12/S706 SECTION
1" = 1'-0"

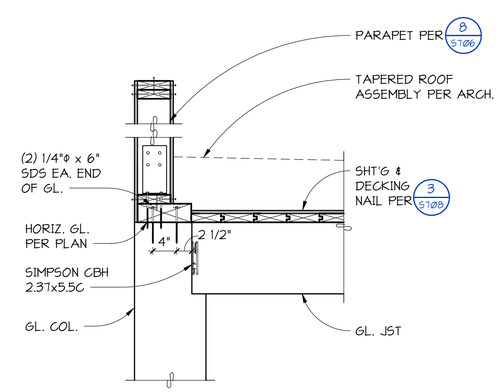

13/S706 SECTION
1" = 1'-0"

C:_Revit Models\21201 Mercer Island Residence R2022 (Central)_DEHollar.rvt

MILLER HULL

The Miller Hull Partnership, LLP
Architecture and Planning
Polson Building
71 Columbia, Sixth Floor
Seattle, WA 98104

Phone: 206.682.6837
Contact: Name

PCS Structural Solutions
Seattle | Tacoma | Portland
www.pcs-structural.com

STAMP

REVIEWED FOR CODE COMPLIANCE
March 27, 2023
SITE COPY

MERCER ISLAND HOUSE: CASCADE

6838 96TH AVE SE
MERCER ISLAND, WA 98040

SUBMITTAL

100% CONSTRUCTION DOCUMENTS

February 24, 2023

REVISIONS

No.	Description	Date

Drawn: DEH
Checked: TJR
M|H Proj No.: A20.0085.00
Issue Date: February 24, 2023

SHEET

WOOD FRAMING DETAILS

S706

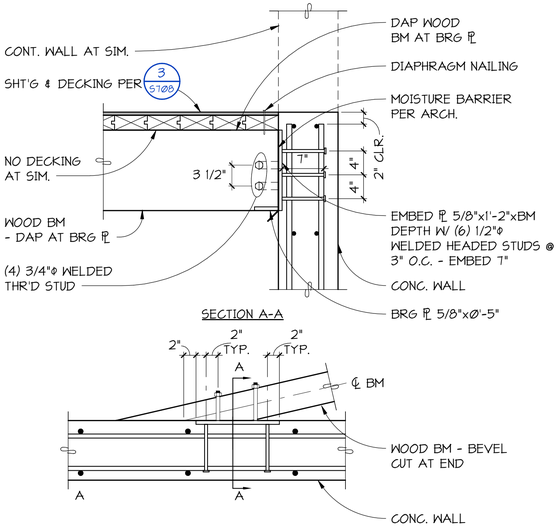

1 S707 DETAIL
1" = 1'-0"

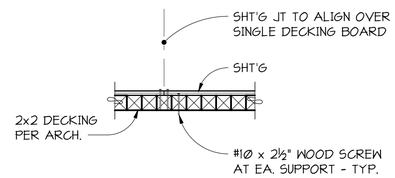

NOTES:
1. SEE PLANS FOR LOCATION OF DECKING.
2. STAPLES SHALL BE INSTALLED WITH THIER CROWNS PARALLEL TO THE LONG DIMENSION OF THE NAILER.
3. SEE DETAIL 5/S703 FOR TYPICAL DIAPHRAGM ATTACHMENT.

2 S707 DETAIL
1" = 1'-0"

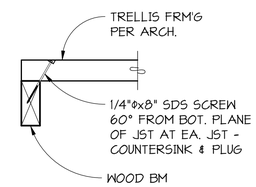

3 S707 SECTION
1" = 1'-0"

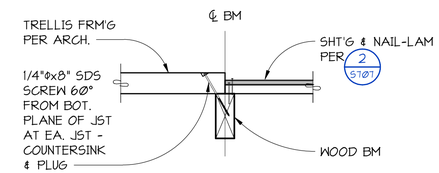

4 S707 SECTION
1" = 1'-0"

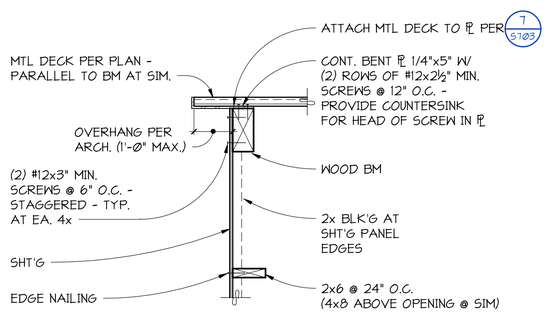

5 S707 SECTION
NO SCALE

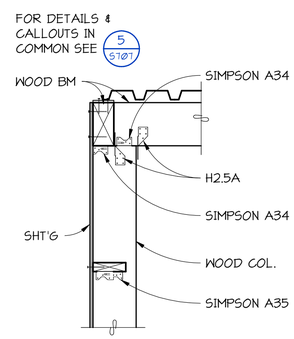

6 S707 SECTION
NO SCALE

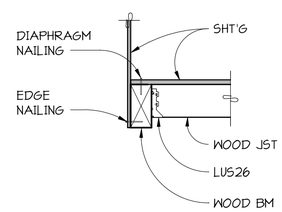

7 S707 SECTION
NO SCALE

BEAM PENETRATION SCHEDULE	
TYPE	SIZE
X1	4" DIA
X2	6" DIA
X3	10" WIDE x 4" DEEP

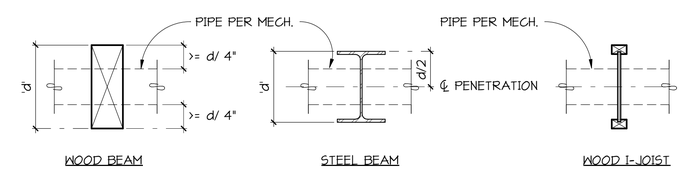

NOTE:
1. CONFIRM I-JOIST PENETRATION SIZE AND LOCATION WITH JOIST MANUFACTURER REQUIREMENTS.
2. SEE FRAMING PENETRATION PLANS FOR ALLOWABLE LOCATIONS.

ALLOWABLE FRAMING PENETRATIONS

8 S707 SECTION
1" = 1'-0"

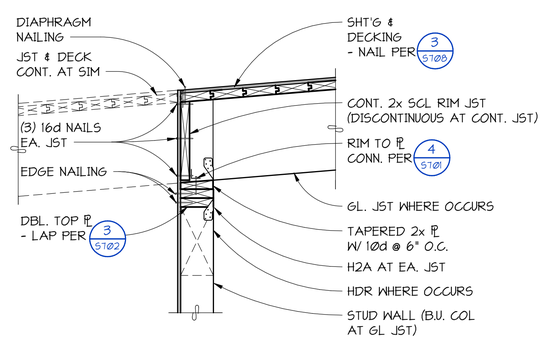

9 S707 SECTION
1" = 1'-0"

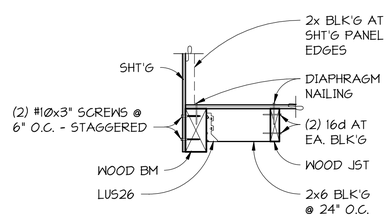

10 S707 SECTION
1" = 1'-0"

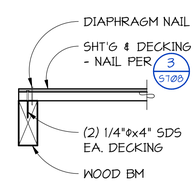

NOTE:
SIMILAR AT INTERIOR BEAM

11 S707 SECTION
1" = 1'-0"

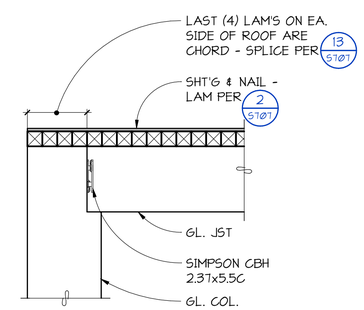

12 S707 SECTION
1" = 1'-0"

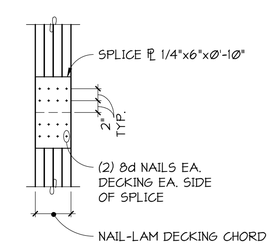

13 S707 SECTION
1" = 1'-0"

C:_Revit Models\21201 Mercer Island Residence R2022 (Central)_DEHollar.rvt

MILLER HULL
The Miller Hull Partnership, LLP
Architecture and Planning
Polson Building
71 Columbia, Sixth Floor
Seattle, WA 98104

Phone: 206.682.6837
Contact: Name

PCS Structural Solutions
Seattle | Tacoma | Portland
www.pcs-structural.com

STAMP

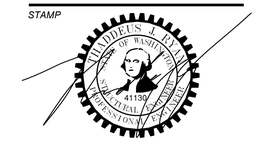

MERCER ISLAND HOUSE: CASCADE

6838 96TH AVE SE
MERCER ISLAND, WA 98040

SUBMITTAL

100% CONSTRUCTION DOCUMENTS

February 24, 2023

REVISIONS

No.	Description	Date

Drawn: DEH
Checked: TJR
M|H Proj No.: A20.0085.00

Issue Date: February 24, 2023

SHEET

WOOD FRAMING DETAILS
S707

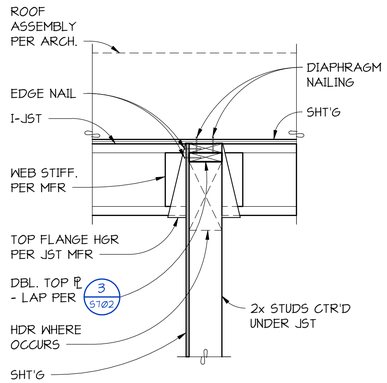

1 S708 SECTION
1" = 1'-0"

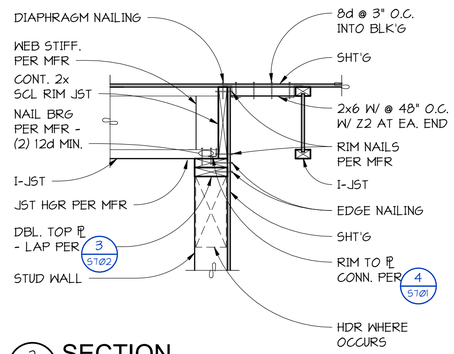

2 S708 SECTION
1" = 1'-0"

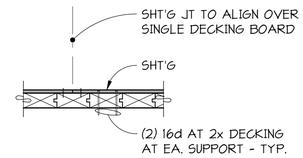

NOTES:
1. DECKING SHALL BE INSTALLED WITH TYPE IV CONTROLLED RANDOM LAYUP AT THE MAIN ROOF AND TWO-SPAN CONTINUOUS LAYUP AT THE GARAGE ROOF END MATCHED AND WITH TONGUES UP THE SLOPE.
2. SEE PLANS FOR LOCATION OF DECKING.
3. STAPLES SHALL BE INSTALLED WITH THEIR CROWNS PARALLEL TO THE LONG DIMENSION OF THE NAILER.
4. SEE DETAIL 5/S703 FOR TYPICAL DIAPHRAGM TO DECKING ATTACHMENT.

TYPICAL ROOF DECKING LAYUP AND FASTENERS

3 S708 SECTION
1" = 1'-0"

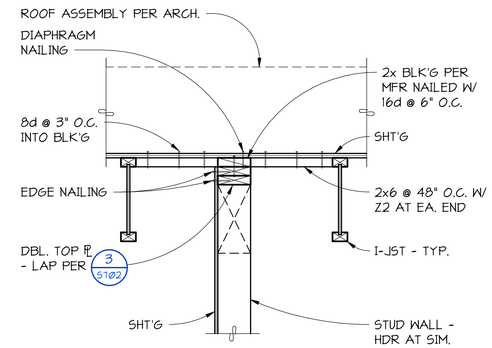

4 S708 SECTION
1" = 1'-0"

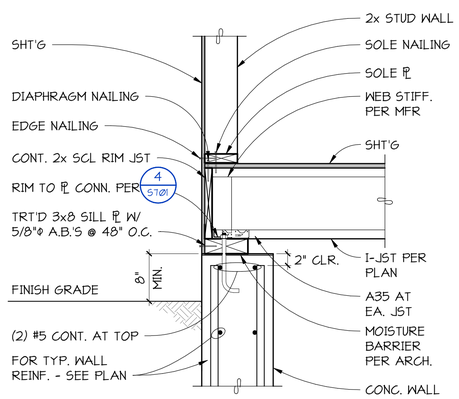

TYPICAL I-JOIST BEARING AT FOUNDATION WALL

5 S708 SECTION
1" = 1'-0"

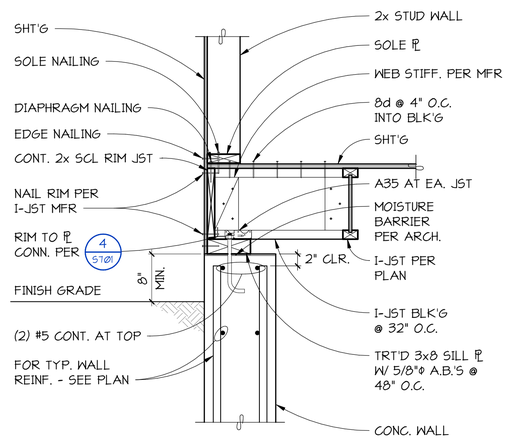

TYPICAL I-JOIST BEARING AT FOUNDATION WALL

6 S708 SECTION
1" = 1'-0"

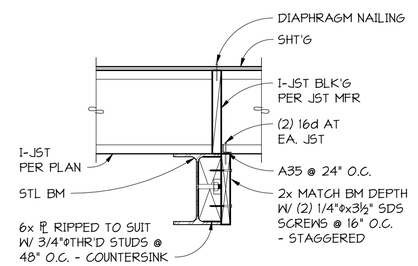

7 S708 SECTION
NO SCALE

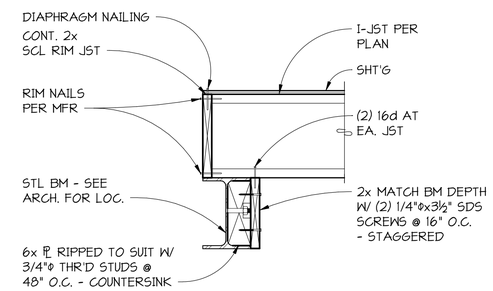

8 S708 SECTION
NO SCALE

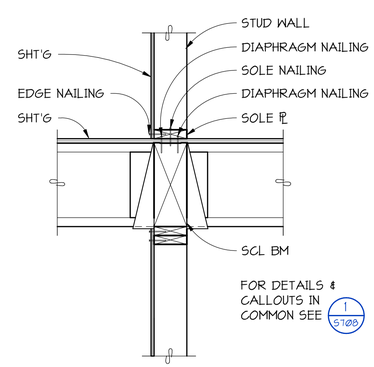

9 S708 SECTION
NO SCALE

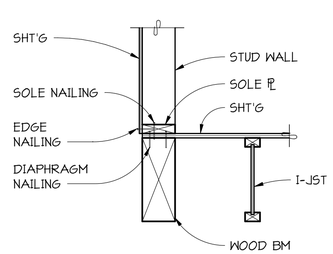

10 S708 SECTION
NO SCALE

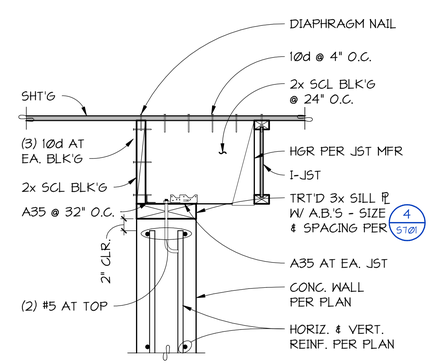

11 S708 SECTION
NO SCALE

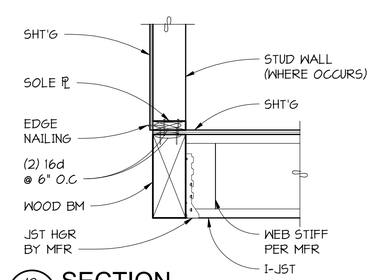

12 S708 SECTION
NO SCALE

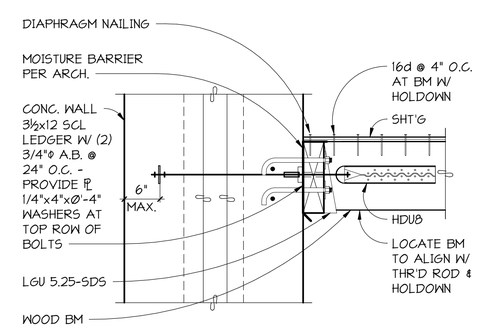

13 S708 SECTION
NO SCALE

C:_Revit Models\21201 Mercer Island Residence R2022 (Central)_DEHollar.rvt

MILLER HULL
The Miller Hull Partnership, LLP
Architecture and Planning
Polson Building
71 Columbia, Sixth Floor
Seattle, WA 98104

Phone: 206.682.6837
Contact: Name

PCS Structural Solutions
Seattle | Tacoma | Portland
www.pcs-structural.com

STAMP

REVIEWED FOR CODE COMPLIANCE
March 27, 2023
SITE COPY

MERCER ISLAND HOUSE: CASCADE

6838 96TH AVE SE
MERCER ISLAND, WA 98040

SUBMITTAL

100% CONSTRUCTION DOCUMENTS

February 24, 2023

REVISIONS

No.	Description	Date

Drawn: DEH
Checked: TJR
M|H Proj No.: A20.0085.00

Issue Date: February 24, 2023

SHEET

WOOD FRAMING DETAILS
S708

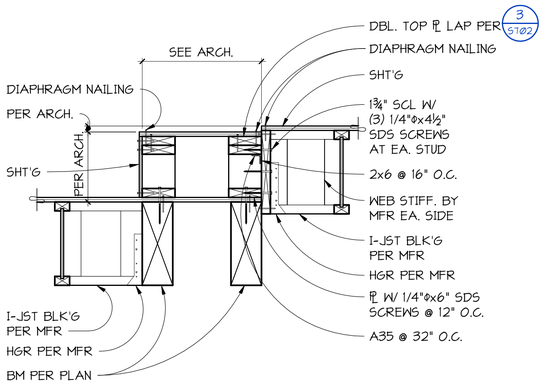

FLOOR STEP

1 S709 SECTION 1" = 1'-0"

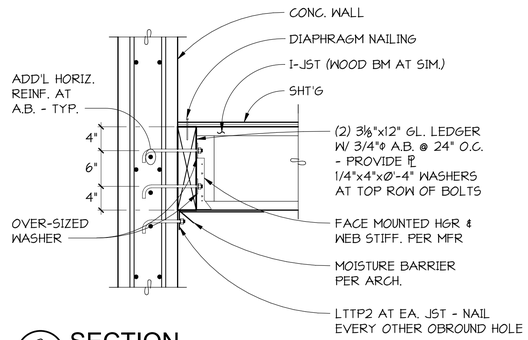

2 S709 SECTION 1" = 1'-0"

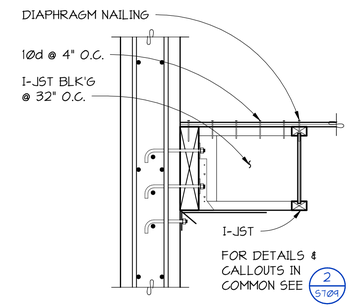

3 S709 SECTION 1" = 1'-0"

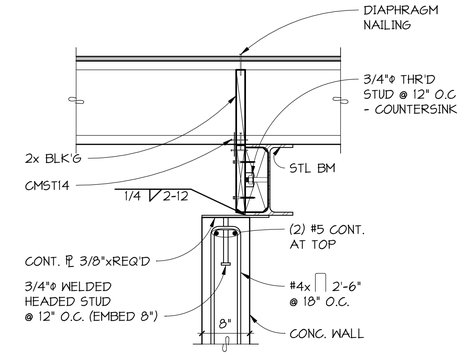

4 S709 SECTION 1" = 1'-0"

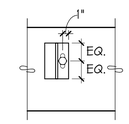

SECTION A-A

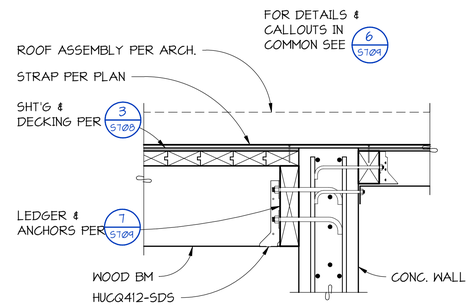

5 S709 SECTION 1" = 1'-0"

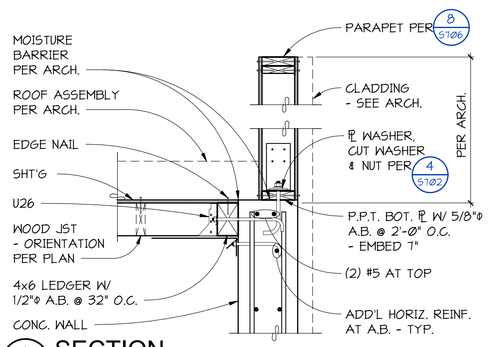

6 S709 SECTION 1" = 1'-0"

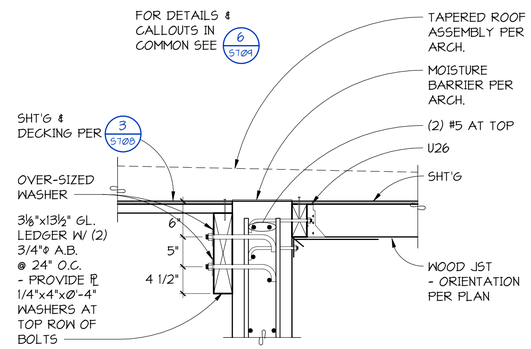

7 S709 SECTION 1" = 1'-0"

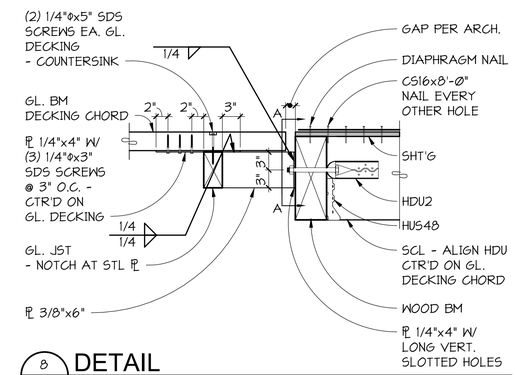

8 S709 DETAIL 1" = 1'-0"

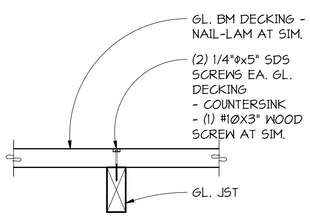

9 S709 SECTION 1" = 1'-0"

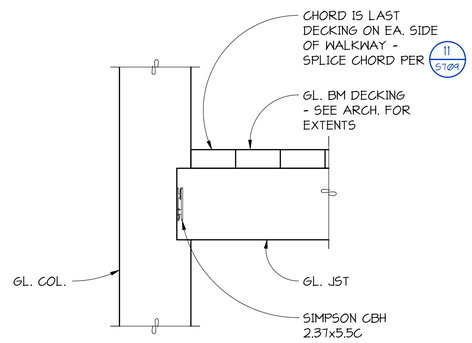

10 S709 SECTION 1" = 1'-0"

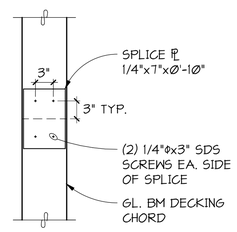

11 S709 SECTION 1" = 1'-0"

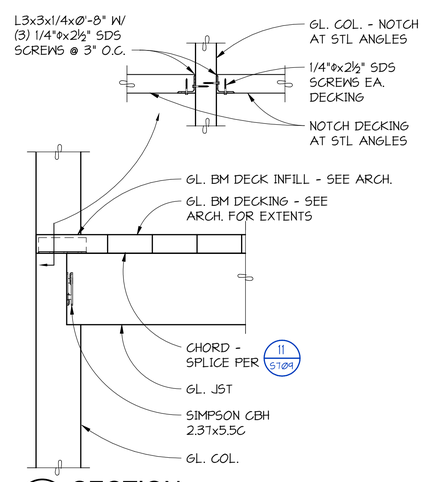

12 S709 SECTION 1" = 1'-0"

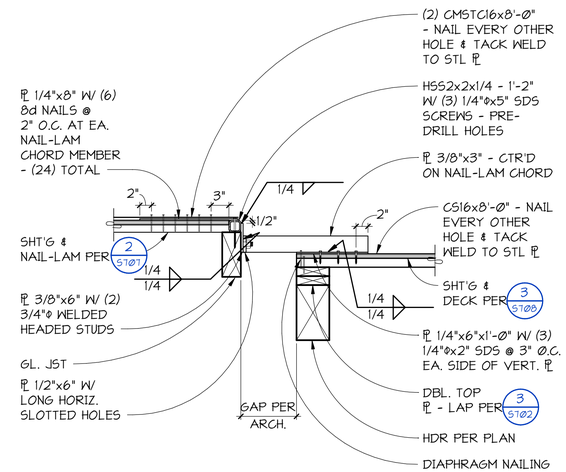

13 S709 SECTION 1" = 1'-0"

C:_Revit Models\21201 Mercer Island Residence R2022 (Central)_DEHollar.rvt

MILLER HULL

The Miller Hull Partnership, LLP
Architecture and Planning
Polson Building
71 Columbia, Sixth Floor
Seattle, WA 98104

Phone: 206.682.6837
Contact: Name

PCS Structural Solutions
Seattle | Tacoma | Portland
www.pcs-structural.com

STAMP

REVIEWED FOR CODE COMPLIANCE
March 27, 2023
SITE COPY

MERCER ISLAND HOUSE: CASCADE

6838 96TH AVE SE
MERCER ISLAND, WA 98040

SUBMITTAL

100% CONSTRUCTION DOCUMENTS

February 24, 2023

REVISIONS

No.	Description	Date

Drawn: DEH
Checked: TJR
M|H Proj No.: A20.0085.00

Issue Date: February 24, 2023

SHEET

WOOD FRAMING DETAILS

S709

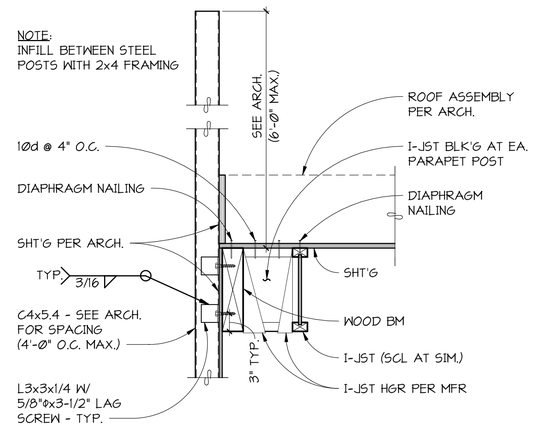

1 S71Ø SECTION
NO SCALE

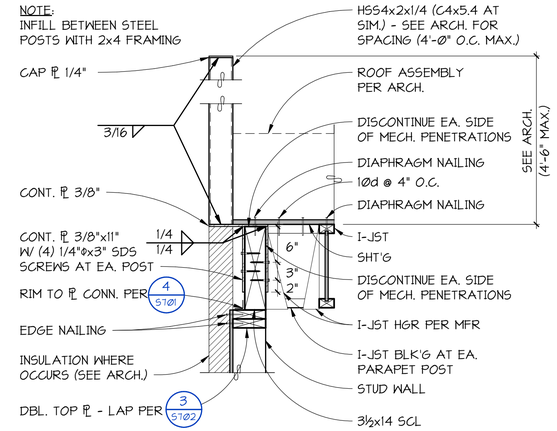

2 S71Ø SECTION
NO SCALE

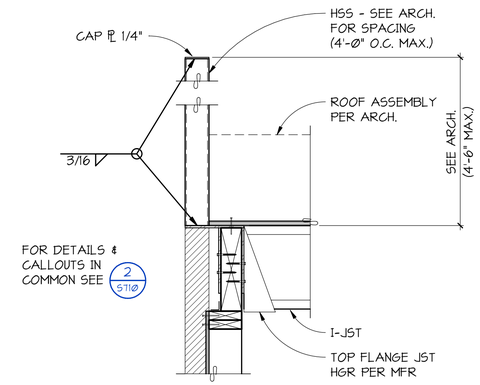

3 S71Ø SECTION
1" = 1'-Ø"

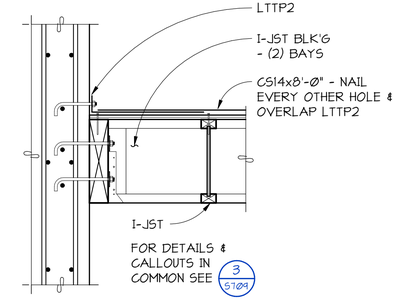

4 S71Ø DETAIL
1" = 1'-Ø"

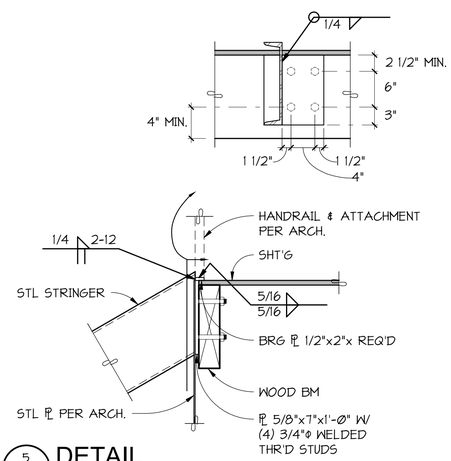

5 S71Ø DETAIL
1" = 1'-Ø"

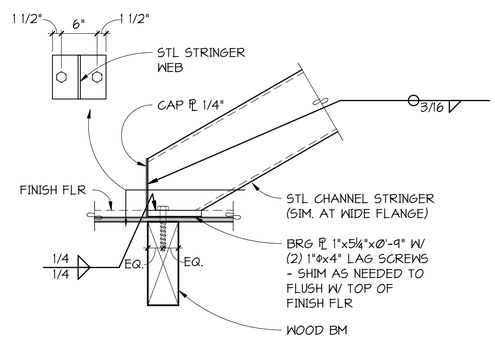

6 S71Ø DETAIL
1" = 1'-Ø"

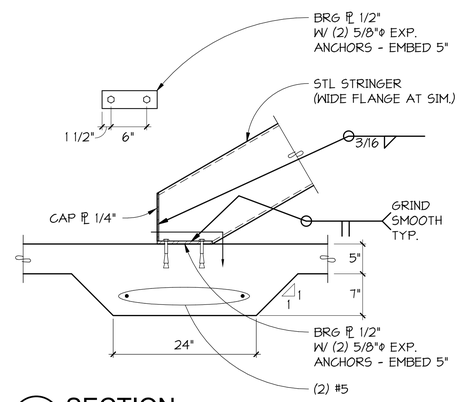

7 S71Ø SECTION
1" = 1'-Ø"

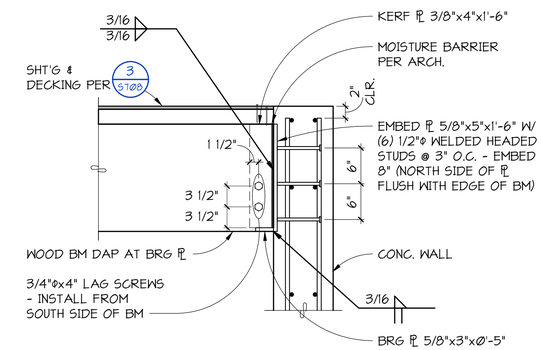

8 S71Ø DETAIL
1" = 1'-Ø"

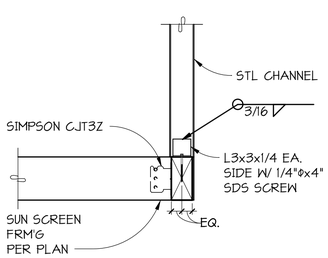

9 S71Ø DETAIL
1" = 1'-Ø"

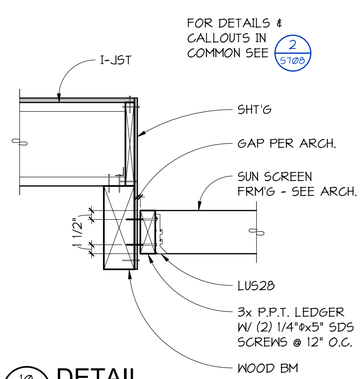

10 S71Ø DETAIL
1" = 1'-Ø"

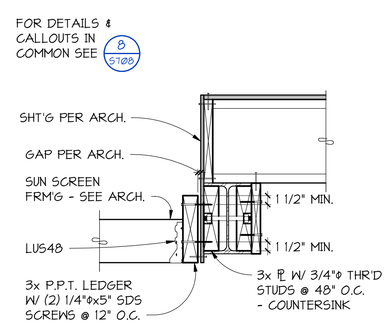

11 S71Ø DETAIL
1" = 1'-Ø"

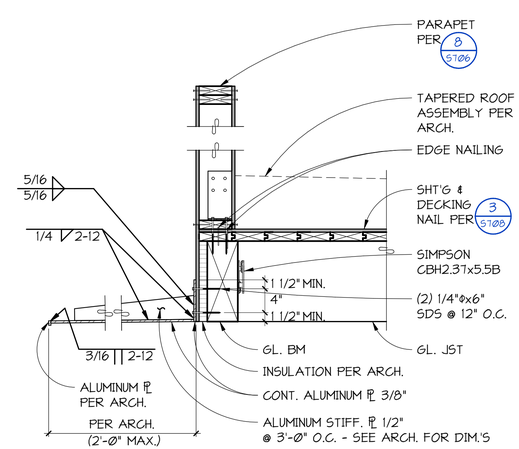

12 S71Ø SECTION
NO SCALE

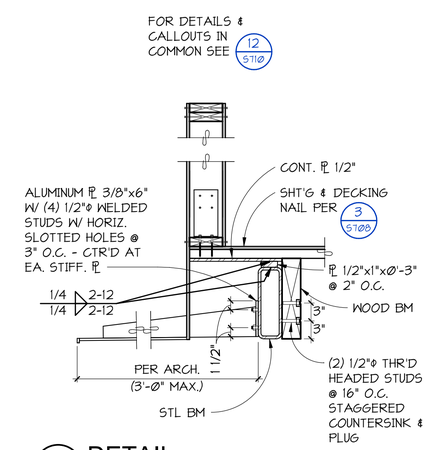

13 S71Ø DETAIL
NO SCALE

C:_Revit Models\21201 Mercer Island Residence R2022 (Central)_DEHollar.rvt

MILLER HULL
The Miller Hull Partnership, LLP
Architecture and Planning
Polson Building
71 Columbia, Sixth Floor
Seattle, WA 98104

Phone: 206.682.6837
Contact: Name

PCS Structural Solutions
Seattle | Tacoma | Portland
www.pcs-structural.com

STAMP

MERCER ISLAND HOUSE: CASCADE

6838 96TH AVE SE
MERCER ISLAND, WA 98040

SUBMITTAL

100% CONSTRUCTION DOCUMENTS

February 24, 2023

REVISIONS

No.	Description	Date

Drawn: DEH
Checked: TJR
M|H Proj No.: A20.0085.00

Issue Date: February 24, 2023

SHEET

WOOD FRAMING DETAILS

S710