ABBREVIATIONS

@	AT
℄	CENTERLINE
℄	PROPERTY LINE OR PLATE
Ø	DIAMETER
#	POUND OR NUMBER
(E)	EXISTING
(N)	NEW
(X)	DEMOLISH
ABV	ABOVE
AD	AREA DRAIN
AFF	ABOVE FINISHED FLOOR
ALT	ALTERNATE
ALUM	ALUMINUM
APPROX	APPROXIMATE
ARCH'L	ARCHITECTURAL
BOS	BOTTOM OF STAIR
BOW	BOTTOM OF WALL
BTM	BOTTOM
CB	CATCH BASIN
CD	CARBON MONOXIDE DETECTOR
CLO	CLOSET
CLR	CLEAR
CMU	CONCRETE MASONRY UNIT
COL	COLUMN
CONC	CONCRETE
CONT	CONTINUOUS
CSD	COMBINATION SMOKE/CO DETECTOR
CTR	CENTER
DBL	DOUBLE
DN	DOWN
DS	DOWNSPOUT
DTL	DETAIL
DW	DISHWASHER
EA	EACH
EF	EXHAUST FAN
EG	EXISTING GRADE
ELEC'L	ELECTRICAL
ELEV	ELEVATOR
EQ	EQUAL
EQUIP	EQUIPMENT
EXT	EXTERIOR
FD	FLOOR DRAIN
FE	FIRE EXTINGUISHER
FG	FINISH GRADE
F/P	FIREPLACE
FT	FOOT OR FEET
GA	GAUGE
GC	GENERAL CONTRACTOR
GWB	GYPSUM WALL BOARD
HD	HEAT DECTECTOR
HDR	HEADER
HORIZ	HORIZONTAL
HR	HOUR
HT	HEIGHT
HVAC	HEATING/VENTILATION/ AIR CONDITIONING
HW	HOT WATER
IN	INCH
INSUL	INSULATION
LF	LINEAR FEET
MAX	MAXIMUM
MECH'L	MECHANICAL
MTL	METAL
MFR	MANUFACTURER
MIN	MINIMUM
MISC	MISCELLANEOUS
N/A	NOT APPLICABLE
NIC	NOT IN CONTRACT
NO.	NUMBER
NTS	NOT TO SCALE
OC	ON CENTER
OH	OVERHEAD
PERF	PERFORATED
R	RISER
REF	REFERENCE
REFR	REFRIGERATOR
REQ	REQUIRED
REV	REVISION/REVISED
RM	ROOM
RO	ROUGH OPENING
SD	SMOKE DETECTOR
SF	SQUARE FEET
SG	SAFETY GLAZING
SIM	SIMILAR
SOG	SLAB ON GRADE
SPEC	SPECIFICATION
SI	SQUARE INCHES
STD	STANDARD
STOR	STORAGE
STRUC'L	STRUCTURAL
SYM	SYMBOL
T	TREAD
T+G	TONGUE AND GROOVE
T.O.	TOP OF
TOS	TOP OF STAIR
TOW	TOP OF WALL
TYP	TYPICAL
UNO	UNLESS NOTED OTHERWISE
VERT	VERTICAL
WC	WATER CLOSET
WH	WATER HEATER
WRB	WEATHER RESISTIVE BARRIER
W/O	WITHOUT

ORIGINAL SHEET SIZE: 24"x 36"

ARTIST'S RENDERING

NTS

VICINITY MAP

NTS

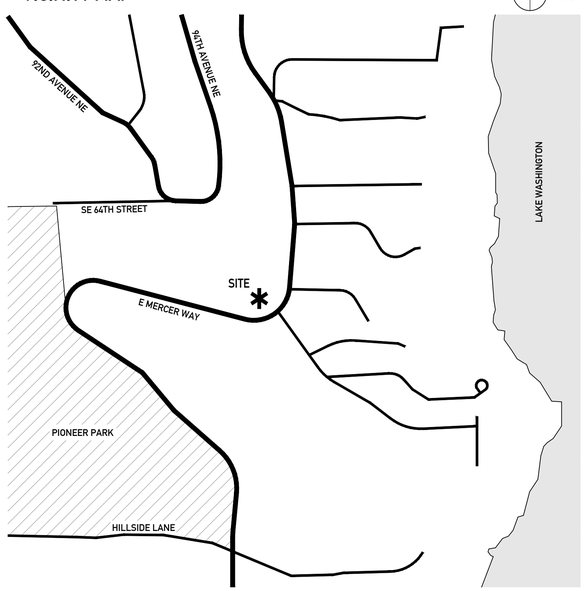

AREA MAP

NTS

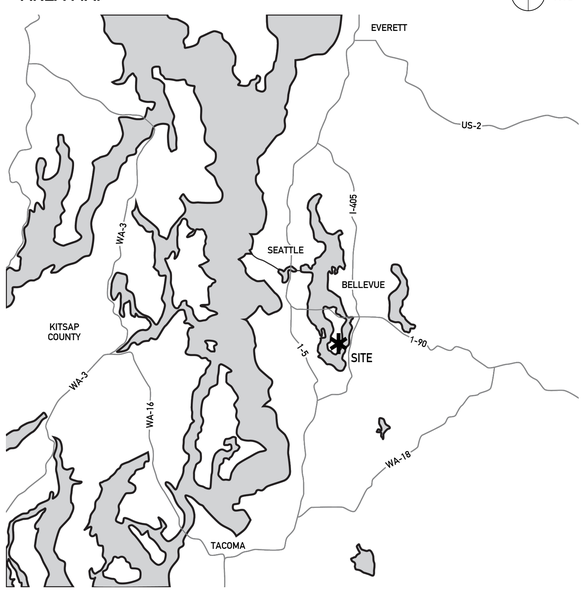

DRAWING INDEX

ARCHITECTURAL

A0.0	PROJECT INFORMATION
A0.1	ARCHITECTURAL GENERAL NOTES
A0.2	ENERGY CODE COMPLIANCE
A0.3	ZONING SITE PLAN
A0.4	ZONING DIAGRAMS
A0.5	TREE PLAN
A0.6	EXCAVATION PLAN AND SECTIONS
	SURVEY
A2.1	BASEMENT FLOOR PLAN
A2.2	FIRST FLOOR PLAN
A2.3	SECOND FLOOR PLAN
A2.4	ROOF PLAN
A3.1	BUILDING ELEVATIONS
A3.2	BUILDING ELEVATIONS
A3.3	BUILDING ELEVATIONS
A3.4	BUILDING ELEVATIONS
A4.1	SECTIONS AND ASSEMBLIES
A4.2	SECTIONS AND ASEEMBLIES
A4.3	SECTIONS AND ASSEMBLIES
A4.10	WALL SECTIONS
A5.1	DETAILS

STRUCTURAL

S1.0	GENERAL STRUCTURAL NOTES
S2.0	PIN PILE PLAN
S2.1	FOUNDATION PLAN
S2.2	MAIN FLOOR FRAMING PLAN
S2.3	SECOND FLOOR FRAMING PLAN
S2.4	ROOF FRAMING PLAN
S3.0	TYPICAL CONCRETE DETAILS
S3.1	CONCRETE DETAILS
S4.0	TYPICAL WOOD FRAMING DETAILS
S4.1	WOOD FRAMING DETAILS
S4.2	WOOD FRAMING DETAILS

CIVIL

C01	COVER SHEET
C02	GENERAL NOTES AND LEGEND
C03	EXISTING CONDITIONS
C04	TESC PLAN
C05	GRADING PLAN
C06	DRAINAGE PLAN
C07	UTILITY PLAN
C08	DETAILS
C09	DETAILS
C10	DETAILS
C11	DETAILS

LANDSCAPE

L-01	LANDSCAPE PLAN
L-02	LANDSCAPE DETAILS

DOCUMENTS

STRUCTURAL CALCULTATIONS
DRAINAGE REPORT

PROJECT DIRECTORY

OWNER + DEVELOPER

JASPAUL GILL
5030 228TH AVENUE SE
ISSAQUAH, WA 98029

ARCHITECT + APPLICANT

CITIZEN DESIGN
10 DRAVUS STREET
SEATTLE, WA 98109
CONTACT: JACOB YOUNG
T: 206.535.7908
E: JYOUNG@COLLABORATIVECO.COM

STRUCTURAL ENGINEER

MALSAM TSANG STRUCTURAL ENGINEERING
122 S JACKSON STREET #210
SEATTLE, WA 98104
CONTACT: RUSS FOISY
T: 206.789.6038
E: RUSSF@MALSAM-TSANG.COM

CIVIL ENGINEER

FACET
9706 4TH AVENUE NE #300
SEATTLE, WA 98115
CONTACT: BEN IDDINS
T: 206.523.0024
E: BIDDINS@FACETNW.COM

LANDSCAPE ARCHITECT

CRAMER DESIGN CONSULTANTS
1909 242ND STREET SE
BOTHELL, WA 98021
CONTACT: GAYLE CRAMER
TEL.: 425.241.6258
EMAIL: CDCLSA@FRONTIER.COM

SURVEYOR

INFORMED LAND SURVEY
PO BOX 5137
TACOMA, WA 98415
CONTACT: SHAUN WARREN
T: 253.627.2070
E: ADMIN@I-LANDSURVEY.COM

GEOTECHNICAL ENGINEER

PANGEO
3213 EASTLAKE AVENUE E, STE. B
SEATTLE, WA 98102
CONTACT: JON REHKOPF
T: 206.262.0370
E: JREHKOPF@PANGEOINC.COM

ARBORIST

EARTHDANCE DESIGN
117 E LOUISA STREET #128
SEATTLE, WA 98102
CONTACT: CORINNE HOLLISTER
T: 206.779.3118
E: CORINNE@EARTHDANCEDESIGN.COM

GENERAL CONTRACTOR

PARS WA CONSTRUCTION, INC.
7901 SE 37TH STREET
MERCER ISLAND, WA 98040
LIC. NO.: PARSWWC813D8
CONTACT: MORTEZA ZAHEDI
T. 425.463.9798
E: MRT.ZAHEDI80@GMAIL.COM

SCOPE OF WORK

DEVELOP A (N) 2-STORY, 5948± SF SINGLE-FAMILY RESIDENCE WITH 896± SF GARAGE, PER PLANS.

CONSTRUCT SITE IMPROVEMENTS INCLUDING BUT NOT LIMITED TO UTILITY SERVICES, RETAINING WALLS, DRIVEWAY AND PATIOS.

CONCURRENT CRITICAL AREAS REVIEW REQUESTED.

ESTABLISH USE AND OCCUPY, PER PLANS.

PROJECT INFORMATION

SITE ADDRESS

6427 E MERCER WAY
MERCER ISLAND, WA 98040

JURISDICTION

MERCER ISLAND, KING COUNTY, WASHINGTON

PARCEL MAP NUMBER

302405-9151

LEGAL DESCRIPTION

PORTION OF THE NW 1/4 OF THE NE 1/4 OF SECTION 30, TOWNSHIP 24N, RANGE 5E, W.M.

REF. SURVEY FOR COMPLETE LEGAL DESCRIPTION.

LOT SIZE + ZONING

ZONING:	R-15
LOT AREA:	16,060.5± SF

BUILDING INFORMATION

OCCUPANCY:	R-3
CONSTRUCTION TYPE:	V-B
HEIGHT:	27'-2½"
STORIES:	(2) + BASEMENT
SPRINKLERS:	NFPA 13D
ALARMS:	NFPA 72
GREENBUILT CERTIFICATION:	TBD
SPECIAL INSPECTIONS:	TBD
FOOTPRINT AREA:	2984± SF
GFA (CONDITIONED):	5948± SF
GFA (UNCONDITIONED):	896± SF
COVERED EXTERIOR AREA:	655± SF
HARD SURFACE AREA:	1626± SF
ROOF SURFACE AREA:	4354± SF
EXTERIOR INSULATION:	R-5 RIGID
EV CHARGING:	TBD

UTILITY INFORMATION

WATER/SEWER:	MERCER ISLAND
POWER:	PSE
GAS:	PSE

SEPA COMPLIANCE

APPLICABLE SEPA THRESHOLD IS FOUR DWELLING UNITS. THIS PROJECT INCLUDES ONE NEW DWELLING UNIT AND IS CATEGORICALLY EXEMPT.

DESIGN CODES

2021 INTERNATIONAL RESIDENTIAL CODE
2021 WA STATE ENERGY CODE - RESIDENTIAL

PROJECT NO.

BUILDING (THIS PERMIT):
CRITICAL AREA REVIEW:

CITIZEN DESIGN

NEW CONSTRUCTION
MERCER ISLAND 6427
6427 E MERCER WAY. MERCER ISLAND, WA 98040

City of MERCER ISLAND

PERMIT

June 18, 2025

PERMIT NUMBER

FOR PLANNING DEPT USE ONLY

PROJECT INFORMATION
SCALE: AS NOTED

A0.0

ARCHITECTURAL GENERAL NOTES

1. ALL WORK SHALL BE IN CONFORMANCE WITH THE 2021 INTERNATIONAL BUILDING CODE (IBC), 2021 INTERNATIONAL RESIDENTIAL CODE (IRC), 2021 WASHINGTON STATE ENERGY CODE (WSEC), 2019 STORMWATER MANAGEMENT MANUAL FOR WESTERN WASHINGTON (SWMM), MERCER ISLAND CITY CODE (MICC), WA. ADMINISTRATIVE CODE (WAC), UNIFORM PLUMBING CODE (UPC), NATIONAL ELECTRICAL CODE (NECA) AND WA VENT & INDOOR AIR QUALITY CODE (VIAQ).
2. ALL DEBRIS SHALL BE REMOVED FROM THE PREMISES AND ALL AREAS TO BE LEFT IN CLEAN (BROOM) CONDITIONS AT ALL TIMES.
3. IT IS THE RESPONSIBILITY OF THE CONTRACTOR TO BECOME FULLY AWARE OF ANY AND ALL CONDITIONS RELATED TO THE SITE AND EXISTING CONDITIONS THAT MAY AFFECT THE COST OR SCHEDULING OF CONSTRUCTION ACTIVITIES PRIOR TO SUBMITTING BID.
4. PRIOR TO COMMENCING WORK, THE CONTRACTOR SHALL VERIFY ALL DIMENSIONS AND CONDITIONS AT THE JOB SITE INCLUDING, BUT NOT LIMITED TO, SOILS AND EXISTING UTILITIES AND SHALL BE RESPONSIBLE FOR THE SAME. ALL DISCREPANCIES SHALL BE REPORTED TO THE ARCHITECT AND OWNER IMMEDIATELY.
5. THE CONTRACTOR IS TO VERIFY THE LOCATION OF ALL UTILITIES AND SERVICES TO THE SITE PRIOR TO BEGINNING ANY SITE IMPROVEMENTS.
6. THERE SHALL BE NO DEVIATION WHATSOEVER FROM THE CONTRACT DOCUMENTS WITHOUT THE ARCHITECT'S AND/OR DESIGNER'S WRITTEN APPROVAL THEREOF, CHANGE ORDER OR CHANGE DIRECTIVE.
7. DO NOT SCALE DRAWINGS OR DETAILS. USE GIVEN DIMENSIONS. CHECK DETAILS FOR LOCATION OF ALL ITEMS NOT DIMENSIONED ON PLANS.
8. DOOR AND CASED OPENINGS WITHOUT DIMENSIONS ARE TO BE SIX INCHES (6") FROM FACE OF ADJACENT WALL OR CENTERED BETWEEN WALLS UNLESS NOTED OTHERWISE.
9. THE DRAWINGS INDICATE GENERAL AND TYPICAL DETAILS OF CONSTRUCTION. WHERE CONDITIONS ARE NOT SPECIFICALLY INDICATED BUT ARE OF SIMILAR CHARACTER TO DETAILS SHOWN, SIMILAR DETAILS OF CONSTRUCTION SHALL BE USED, SUBJECT TO REVIEW AND APPROVAL BY THE ARCHITECT AND STRUCTURAL ENGINEER.
10. BUILDING SYSTEMS AND COMPONENTS NOT SPECIFICALLY DETAILED SHALL BE INSTALLED AS PER MINIMUM MANUFACTURER'S RECOMMENDATIONS. NOTIFY THE ARCHITECT OF ANY RESULTING CONFLICTS.
11. ALL WORK SHALL CONFORM TO APPLICABLE BUILDING CODES AND ORDINANCES. IN CASE OF ANY CONFLICT WHEREIN THE METHODS OR STANDARDS OF INSTALLATION, OR THE MATERIALS SPECIFIED, DO NOT EQUAL OR EXCEED THE REQUIREMENTS OF THE LAWS OR ORDINANCES, THE LAWS OR ORDINANCES SHALL GOVERN.
12. INSTALL DUST BARRIERS AND OTHER PROTECTION AS REQUIRED TO PROTECT INSTALLED FINISHES AND FACILITIES.
13. PLUMBING, MECHANICAL AND ELECTRICAL DRAWINGS ARE SUPPLEMENTARY TO ARCH'L DRAWINGS, IT SHALL BE THE RESPONSIBILITY OF EACH CONTRACTOR TO CHECK WITH THE ARCH'L DRAWINGS BEFORE INSTALLATION OF THEIR WORK. ANY DISCREPANCY BETWEEN ARCH'L DRAWINGS AND THE CONSULTING ENGINEER(S) OR OTHER SUPPLEMENTARY DRAWINGS SHALL BE BROUGHT TO THE ARCHITECT'S AND OWNER'S ATTENTION IN WRITING.
14. THIS PROJECT CONTAINS GLAZING THAT WILL BE SUBJECT TO FEDERAL AND LOCAL GLAZING STANDARDS AND THE GLAZING SUBCONTRACTOR SHALL BE RESPONSIBLE FOR ADHERENCE TO THESE REQUIREMENTS. IF THE GLAZING SUBCONTRACTOR FINDS ANYTHING IN THE DOCUMENTS NOT IN COMPLIANCE WITH THE STANDARDS, HE OR SHE SHALL BRING DISCREPANCIES TO THE ATTENTION OF THE ARCHITECT BEFORE PROCEEDING.
15. ALL GLAZING IN HAZARDOUS LOCATIONS, DEFINED BY THE 2021 IRC R308.4, SHALL BE SAFETY GLAZING, INCLUDING BUT NOT LIMITED TO THE SAFETY GLAZING IDENTIFIED IN THE CONSTRUCTION DOCUMENTS.
16. THERE SHALL BE NO EXPOSED PIPE, CONDUITS, DUCTS, VENTS, ETC. ALL SUCH LINES SHALL BE CONCEALED OR FURRED AND FINISHED, UNLESS NOTED AS EXPOSED CONSTRUCTION TO THE DRAWINGS. OFFSET STUDS WHERE REQUIRED SO THAT FINISHED WALL SURFACE WILL BE FLUSH.
17. CONTRACTOR SHALL PROVIDE TEMPORARY BRACING FOR THE STRUCTURE AND STRUCTURAL COMPONENTS UNTIL ALL FINAL CONNECTIONS HAVE BEEN COMPLETED IN ACCORDANCE WITH THE PLANS.
18. CARRY ALL FOOTINGS TO SOLID, UNDISTURBED ORIGINAL EARTH. REMOVE ALL UNSUITABLE MATERIAL UNDER FOOTINGS AND SLAB AND REPLACE WITH CONCRETE OR WITH COMPACTED FILL AS DIRECTED BY A GEOTECHNICAL ENGINEER.
19. ALL WOOD FRAMING DETAILS NOT SHOWN OTHERWISE SHALL BE CONSTRUCTED TO THE MINIMUM STANDARDS OF THE 2021 IRC.
20. ALL WOOD IN DIRECT CONTACT WITH CONCRETE OR EXPOSED WEATHER SHALL BE PRESSURE TREATED WITH AN APPROVED PRESERVATIVE UNLESS DECAY RESISTANT HEARTWOOD OF CEDAR OR REDWOOD IS USED. FASTENERS FOR PRESSURE TREATED WOOD SHALL BE HOT DIPPED GALVANIZED STEEL, STAINLESS STEEL, SILICONE, BRONZE OR COPPER.
21. ALL WOOD LESS THAN 6 INCHES (6") FROM THE GROUND OR 2 INCHES (2") MEASURED VERTICALLY FROM EXTERIOR CONCRETE STEPS, PORCH SLABS, PATIO SLABS, AND SIMILAR HORIZONTAL SURFACES EXPOSED TO WEATHER SHALL BE A NATURALLY DURABLE WOOD OR PRESSURE TREATED WITH AN APPROVED PRESERVATIVE PER 2021 IRC R317.
22. PROVIDE FIRE-BLOCKING VERTICALLY AT CEILING AND FLOOR LEVELS AND HORIZONTALLY AT INTERVALS NOT EXCEEDING 10 FEET AND AS REQUIRED FOR CONCEALED SPACES UNDER 2021 IRC R302.11, R502.13 & R602.8.
23. NAIL GYPSUM WALLBOARD TO ALL STUDS, TOP PLATES, BOTTOM PLATES AND BLOCKING WITH COOLER NAILS @ 7 INCHES (7") O.C. MAXIMUM SPACING UNLESS SHOWN OTHERWISE. USE 5d FOR ½" WALLBOARD AND 6d FOR ⅝" WALLBOARD.
24. PROVIDE GALVANIC INSULATION BETWEEN DISSIMILAR METALS.
25. STRUCTURAL, ELECTRICAL, MECHANICAL AND ENERGY NOTES ARE LOCATED WITHIN THIS SET OF DRAWINGS.
26. NO MATERIALS FROM THE WORK ARE TO BE STOCKPILED ON THE PUBLIC RIGHTS-OF WAY. ALL RUBBISH AND DEBRIS IS TO BE REMOVED FROM THE SITE.
27. ADJACENT PROPERTIES, STREETS AND WALKS ARE TO BE PROTECTED FROM DAMAGE AT ALL TIMES.
28. ALL DOWNSPOUTS AND ROOF DRAINS ARE TO BE CONNECTED TO THE POINT OF DISCHARGE SPECIFIED ON THE DRAINAGE PLAN AND/OR SITE PLAN BY TIGHTLINE UNLESS NOTED OTHERWISE IN CONSTRUCTION DOCUMENTS.
29. ALL DIMENSIONS ARE FACE OF STUD WALL, CENTER LINE OF COLUMN, OR FACE OF CONCRETE U.N.O.
30. THE CONTRACTOR SHALL SECURE PERMITS REQUIRED BY THE FIRE DEPARTMENT PRIOR TO BUILDING OCCUPATION.
31. THE CONTRACTOR SHALL TAKE ALL NECESSARY PRECAUTIONS TO ENSURE THE SAFETY OF THE OCCUPANTS AND WORKERS AT ALL TIMES DURING THE COURSE OF THE PROJECT.
32. APPROVED PLANS SHALL BE KEPT IN A PLAN BOX AND SHALL NOT BE USED BY ANY WORKMEN.
33. THE CONTRACTOR AND/OR THE SUB-CONTRACTOR SHALL APPLY FOR, OBTAIN AND PAY FOR ALL REQUIRED PERMITS AND FEES EXCEPT FOR THE BUILDING PERMIT.
34. ALL STAIRWAYS MUST MEET THE REQUIREMENTS OF 2021 IRC R311.7.
35. ALL EMERGENCY ESCAPES AND RESCUE OPENINGS FOR BEDROOMS AND BASEMENTS MUST MEET THE REQUIREMENTS OF 2021 IRC R310.
36. ROOF VENTILATION MUST MEET THE REQUIREMENTS OF 2021 IRC R806.
37. CRAWL SPACE VENTILATION MUST MEET THE REQUIREMENTS OF 2021 IRC R408.
38. ALL SIDING METHODS MUST HAVE A WEATHER RESISTIVE BARRIER THAT MEETS THE REQUIREMENTS OF 2021 IRC R703.2. GENERAL WEATHER PROTECTION FOR THE ENTIRE PROJECT MUST MEET THE REQUIREMENTS OF 2021 IRC R903.
39. ALL GUARDRAILS FOR DECKS, BALCONIES, AND OPEN RAILINGS MUST MEET THE REQUIREMENTS OF 2021 IRC 312.
40. ALL SKYLIGHTS AND SLOPED GLAZING MUST MEET THE REQUIREMENTS OF 2021 IRC 308.6.
41. ALL CEILING HEIGHTS MUST MEET THE REQUIREMENTS OF 2021 IRC R305.
42. ALL UNDER FLOOR AND CRAWL SPACE MUST BE ACCESSIBLE PER 2021 IRC R408.4.
43. ATTIC ACCESS MUST BE SIZED AND LOCATED ACCESSIBLY PER 2021 IRC R807.1.
44. ALL SHOWERS SHALL BE FINISHED WITH A SMOOTH, NOT-ABSORBENT SURFACE TO 72" ABOVE THE DRAIN PER IRC SEC. 307.2
45. LANDINGS OR FINISHED FLOORS AT THE REQUIRED EGRESS DOOR SHALL NOT BE MORE THAN 1½ " LOWER THAN THE TOP OF THRESHOLD PER IRC R311.3.1.

GRADING NOTES

1. CONSTRUCTION EROSION CONTROL MEASURES MUST BE IN PLACE AND APPROVED BY LOCAL MUNICIPALITY PRIOR TO ANY EARTH DISTURBANCE. CALL THE LOCAL MUNICIPALITY TO SCHEDULE AN INSPECTION APPOINTMENT.
2. NO SEDIMENT SHALL BE TRACKED INTO THE SITE OR ONTO PAVED SURFACES. SEDIMENT SHALL BE REMOVED FROM TRUCKS AND EQUIPMENT PRIOR TO LEAVING THE SITE. IN THE EVENT THERE IS A FAILURE OF AN EROSION CONTROL SYSTEM RESULTING IN SEDIMENT BEING TRACKED ONTO PAVED SURFACES, THE CONTRACTOR SHALL IMMEDIATELY IMPLEMENT MEASURES TO CORRECT THE SITUATION, AND STREET SWEEPING SHALL BE EMPLOYED ON AN EMERGENCY BASIS. IF STREET SWEEPING VEHICLES ARE UTILIZED, THEY SHALL BE OF THE TYPE THAT ACTUALLY REMOVES SEDIMENT FROM THE PAVEMENT.
3. FOR SITES WITHIN AN ENVIRONMENTALLY CRITICAL AREA (ECA), GRADING MUST BE STABILIZED BY OCTOBER 31ST AND NO EXCAVATION OR FILL PLACEMENT TO BE PERFORMED BETWEEN OCTOBER 31ST AND APRIL 1ST.

ROOF NOTES

1. SHADED AREAS INDICATE OVERFRAMING, 2x6 @ 24" O.C. TYPICAL UNLESS NOTED OTHERWISE.
2. SOFFIT, VENT, AND INSULATE ALL CANTILEVERED AREAS.
3. PROVIDE SOLID BLOCKING OVER SUPPORTS.
4. DOWNSPOUTS TO BE 4" SOLID PIPE TIGHTLINED INDEPENDENT OF FOOTING DRAIN.
5. ALL MANUFACTURED TRUSSES:
   - SHALL HAVE DESIGN DETAILS AND DRAWINGS ON SITE FOR FRAMING INSPECTION
   - SHALL BE INSTALLED AND BRACED TO MANUFACTURER'S SPECIFICATIONS
   - SHALL CARRY MANUFACTURER'S STAMP ON EACH TRUSSES
6. FLASHINGS SHALL BE INSTALLED IN SUCH A MANNER AS TO PREVENT MOISTURE ENTERING THE WALL AND ROOF THROUGH JOINTS IN COPINGS, THROUGH MOISTURE PERMEABLE MATERIALS AND AT INTERSECTIONS WITH PARAPET WALLS AND OTHER PENETRATIONS THROUGH THE ROOF PLANE. METAL FLASHING SHALL BE CORROSION RESISTANT WITH A THICKNESS OF NOT LESS THAN 0.0019 INCH PER IRC R903.2.
7. PARAPET WALLS SHALL BE PROPERLY COPED WITH NONCOMBUSTIBLE, WEATHERPROOF MATERIALS OF A WIDTH NO LESS THAN THE THICKNESS OF THE PARAPET WALL.
8. WHERE ROOF DRAINS ARE REQUIRED, OVERFLOW DRAINS HAVING THE SAME SIZE AS THE ROOF DRAINS SHALL BE INSTALLED PER LOCAL RESIDENTIAL CODE AND THE INTERNATIONAL PLUMBING CODE.

DRYWALL NOTES

1. PROVIDE ½" GYPSUM WALL BOARD FOR NON-FIRE-RATED WALL ASSEMBLIES AND ⅝" TYPE X GWB FOR FIRE-RATED WALL ASSEMBLIES WITH ALL EXPOSED JOINTS AND FASTENER HEADS SMOOTH AND FLUSH WITH SURFACE OF BOARDS, JOINTS TAPED AND PREPARED FOR APPLICATION OF FINISH.
2. PROVIDE ⅝" GYPSUM WALL BOARD FOR NON-FIRE-RATED CEILING ASSEMBLIES AND ⅝" TYPE X GWB FOR FIRE-RATED CEILING ASSEMBLIES AS INDICATED IN THE APPLICABLE ASSEMBLY DESCRIPTION.
3. REFERENCE "RECOMMENDED SPECIFICATIONS FOR THE APPLICATION AND FINISHING OF GYPSUM BOARD", LATEST EDITION, AS PUBLISHED BY THE GYPSUM ASSOCIATION (ALSO PUBLISHED AS ANSI 97. 1 AND "USING GYPSUM BOARD AND CEILING", LATEST EDITION) FOR ADDITIONAL INSTALLATION REQUIREMENTS.
4. USE WATER-RESISTANT BOARD AT ALL WET AREAS TO 4 FEET ABOVE FINISH FLOOR.
5. WHEN GYPSUM BOARD IS USED AS A BASE FOR TILE OR WALL PANELS FOR TUB, SHOWER OR WATER CLOSET COMPARTMENT WALLS, WATER RESISTANT GYPSUM BACKING BOARD SHALL BE USED PER 2021 IRC R702.4.2

ORIGINAL SHEET SIZE: 24"x 36"

FRAMING NOTES

1. ALL MATERIALS AND WORKMANSHIP SHALL CONFORM TO THE REQUIREMENTS OF THE DRAWINGS, NOTES, SPECIFICATIONS, AND ALL APPLICABLE CODES AND ORDINANCES.
2. ALL FRAME CONSTRUCTION SHALL CONFORM TO MIN STANDARDS OF 2021 IBC AND IRC. FASTENING REQ'S TO BE IN ACCORDANCE TO 2021 IBC. SEE STRUCTURAL DRAWINGS GENERAL NOTES AND SPECIFICATIONS FOR ANY OTHER NOTES THAT MAY RELATE SPECIFICALLY TO GRADES AND SIZING OF ALL FRAMING MEMBER.
3. COLUMNS AND POSTS LOCATED ON CONCRETE OR MASONRY FLOORS OR DECKS EXPOSED TO THE WEATHER OR TO WATER SPLASH OR IN BASEMENT AND WHICH SUPPORT PERMANENT STRUCTURES SHALL BE SUPPORTED BY CONCRETE PIERS OR METAL PEDESTALS PROJECTING ABOVE FLOORS UNLESS APPROVED WOOD OR NATURAL RESISTANCE TO DECAY OR TREATED WOOD IS USED. THE PEDESTALS SHALL PROJECT AT LEAST 6 INCHES (6") ABOVE EXPOSED EARTH AND AT LEAST 1 INCH (1") ABOVE SUCH FLOORS.
4. ALL WOOD OR WOOD PRODUCTS EXPOSED TO WEATHER OR IN DIRECT CONTACT WITH CONCRETE SHALL BE PROTECTED AGAINST DECAY PER 2021 IRC R317.
5. WHERE INSTALLATION INCLUDES MANUFACTURED PRODUCTS, COMPLY WITH THE MANUFACTURER'S APPLICABLE INSTRUCTIONS AND RECOMMENDATIONS FOR INSTALLATION. VERIFY ROUGH-IN DIMENSIONS FOR EQUIPMENT AND PROVIDE BUCK-OUTS, BACKING AND JACKS AS REQUIRED.
6. ALL GUARDRAILS PER IRC R312 TO BE 36" HIGH MINIMUM FROM FINISHED FLOOR LINE. OPENINGS IN RAILING ASSEMBLIES TO BE CONSTRUCTED SUCH THAT A 4" DIAMETER SPHERE WILL NOT FIT THROUGH. GUARDRAILS AND HANDRAILS TO WITHSTAND A 200 LB/SF CONCENTRATED LOAD APPLIED IN ANY DIRECTION AT ANY POINT ALONG THE TOP. GUARD IN-FILL COMPONENTS (ALL THOSE EXCEPT THE HANDRAIL), BALUSTERS AND PANEL FILLERS SHALL BE DESIGNED TO WITHSTAND A HORIZONTALLY APPLIED NORMAL LOAD OF 50 LBS ON AN AREA EQUAL TO 1 SF. THIS LOAD NEEDS TO ASSUMED TO ACT CONCURRENTLY WITH ANY OTHER LIVE LOAD REQUIREMENTS. HANDRAILS TO BE BETWEEN 1½" DIA. AND 2" DIA. WITH CLEARANCE OF 1½" BETWEEN RAIL AND WALL SURFACE, MOUNT BETWEEN 34" AND 38" OFF STAIR NOSING.
7. ALL WOOD EXPOSED TO WEATHER, SUCH AS WOOD USED FOR DECK FRAMING INCLUDING DECKING, RAILINGS, JOISTS, BEAMS, AND POSTS SHALL BE PRESSURE TREATED OR OF WOOD WITH NATURAL RESISTANCE TO DECAY.
8. WHEN EXTERIOR WALLS ARE DIMENSIONED 6", THEY INCLUDE ½" SHEATHING OVER 2x6 STUDS @ 16" O.C.

LIVING AREA NOTES

1. ALL INTERIOR WALLS TO BE 2x4 @ 16" O.C. (U.N.O.), EXCEPTING PLUMBING WALLS.
2. ALL EXTERIOR WALLS TO BE 2x6 @ 16" O.C. (U.N.O.).
3. HEADERS PER STRUCTURAL (U.N.O).
4. PROVIDE FIREBLOCKING AT ALL PLUMBING OPENINGS.
5. PROVIDE SOLID BLOCKING OVER SUPPORTS.
6. WHEN THERE IS USABLE SPACE BOTH ABOVE AND BELOW THE CONCEALED SPACE OF A FLOOR-CEILING ASSEMBLY, DRAFTSTOPS SHALL BE INSTALLED SO THAT THE AREA OF CONCEALED SPACE DOES NOT EXCEED 1000 SF. DRAFT STOPPING SHALL DIVIDE THE CONCEALED SPACE INTO APPROXIMATELY EQUAL AREAS AND SHALL BE OF ½" GYPSUM WALLBOARD, ⅜" WOOD STRUCTURAL PANELS OR OTHER APPROVED MATERIALS INSTALLED PARALLEL TO THE FLOOR FRAMING MEMBERS PER 2021 IRC R302.12.
7. PROVIDE FIRE-BLOCKING TO CUT OFF ALL CONCEALED HORIZONTAL AND VERTICAL DRAFT OPENINGS AND TO FORM AN EFFECTIVE FIRE BARRIER BETWEEN STORIES, AND BETWEEN A TOP STORY AND THE ROOF SPACE. FIRE-BLOCKING SHALL CONSIST OF NOT LESS THAN 2 INCH NOMINAL LUMBER OR OTHER APPROVED MATERIAL PER 2021 IRC R302.11.
8. ASPHALT-SATURATED FELT FREE FROM HOLES OR BREAKS, WEIGHTING NOT LESS THAN 14 POUNDS PER 100 SF AND COMPLYING WITH ASTM D 226 OR OTHER APPROVED WEATHER RESISTANT MATERIAL SHALL BE APPLIED OVER SHEATHING OF ALL EXTERIOR WALLS. APPROVED ALTERNATE WEATHERPROOF MEMBRANES SHALL BE USED FOR OPEN JOINT RAIN SCREEN SIDING. WEATHER RESISTANT MATERIALS SHALL BE APPLIED HORIZONTALLY PER MANUFACTURERS RECOMMENDATIONS, WITH THE UPPER LAYER LAPPED OVER THE LOWER LAYER NOT LESS THAN 2 INCHES AND NOT LESS THAN 6 INCHES WHERE JOINTS OCCUR PER 2021 IRC 703.2.
9. APPROVED CORROSION-RESISTIVE FLASHING SHALL BE PROVIDED IN THE EXTERIOR WALL ENVELOPE IN SUCH A MANNER AS TO PREVENT ENTRY OF WATER INTO THE WALL CAVITY OR PENETRATION OF WATER TO THE BUILDINGS SURFACE AND SHALL BE INSTALLED TO PREVENT WATER FROM REENTERING THE EXTERIOR WALL ENVELOPE.
10. FLASHING SHALL BE INSTALLED BUT NOT LIMITED TO THE FOLLOWING LOCATIONS:
    - THE TOP OF ALL EXTERIOR WINDOW AND DOOR OPENINGS
    - INTERSECTIONS OF FRAME WALLS AND MASONRY OR STUCCO
    - UNDER MASONRY, WOOD OR METAL COPINGS AND SILLS
    - CONTINUOUSLY ABOVE ALL PROJECTING WOOD TRIM
    - WHERE EXTERIOR PORCHES, DECKS OR STAIRS ATTACH TO A HALF WALL
    - AT WALL AND ROOF OR SOFFIT INTERSECTIONS
    - AT GUTTERS

LIGHTING NOTES

1. ALL ELECTRICAL WORK IS TO BE DESIGNED BY THE SUBCONTRACTOR AND COMPLETED PER APPLICABLE CODES AND ORDINANCES, INCLUDING BUT NOT LIMITED TO THE CODES REFERENCED IN ARCH'L GENERAL NOTE #1.
2. ELECTRICAL CONTRACTOR SHALL OBTAIN AND PAY FOR ALL REQUIRED PERMITS RELATED TO THE PARTY'S SCOPE OF WORK.
3. WIRING METHODS SHALL BE AS PERMITTED BY "CODE" AND INSTALLATION PER "NECA" STANDARDS.
4. USE OF ALUMINUM WIRE IS LIMITED TO SIZE #4 AND LARGER.
5. ALL DEVICES TO BE SPECIFICATION GRADE.
6. ALL NEW ELECTRICAL PANELS OR LOAD CENTERS TO BE PROTECTED ON LINE SIDE BY CURRENT LIMITING FUSES.
7. ALL RECEPTACLES SHALL BE AT LEAST 15 INCHES FROM FINISHED FLOOR TO BOTTOM OF BOX UNLESS NOTED OTHERWISE.
8. ALL SWITCHES SHALL BE 42 INCHES FROM FINISHED FLOOR TO BOTTOM OF BOX UNLESS NOTED OTHERWISE.
9. LOCATE RECEPTACLES PER NECA.
10. VERIFY ALL RECEPTACLES, SWITCH, AND FIXTURE LOCATIONS WITH OWNER PRIOR TO INSTALLATION.
11. ALL EXTERIOR LIGHTING TO BE SHIELDED AND DIRECTED AWAY FROM ADJACENT PROPERTIES.

PLUMBING NOTES

1. ALL PLUMBING WORK IS TO BE DESIGNED BY SUBCONTRACTOR AND SHALL COMPLY WITH ALL APPLICABLE CODES AND ORDINANCES.
2. PLUMBING CONTRACTOR SHALL OBTAIN AND PAY FOR ALL REQUIRED PERMITS RELATED TO THE PARTY'S SCOPE OF WORK PRIOR TO BEGINNING WORK.
3. PROVIDE PRESSURE RELIEF VALVE FOR HOT WATER TANK WHERE REQUIRED BY MANUFACTURER. DRAIN TO THE OUTSIDE OF THE BUILDING WITH DRAIN END NOT MORE THAN 2 FEET NOR LESS THAN 6 INCHES ABOVE THE GROUND, POINTING DOWN.
4. HOT WATER TANKS HAVING FLEXIBLE PIPE CONNECTIONS AND OVER 4 FEET TALL SHALL BE STRAPPED DOWN TO PREVENT OVERTURN IN THE EVENT OF AN EARTHQUAKE.
5. PROVIDE AN APPROVED BACK FLOW PREVENTION DEVICE AT ALL HOSE BIBS.
6. CONTRACTOR SHALL PROVIDE DRAIN, WASTE AND VENT AND HOT WATER DISTRIBUTION RISER DIAGRAMS FOR CITY AND ARCHITECT REVIEW.
7. EACH HORIZONTAL DRAINAGE PIPE SHALL BE PROVIDED WITH A CLEANOUT AT ITS UPPER TERMINAL.
8. CONTRACTOR TO PROVIDE HORIZONTAL DRAINAGE PIPING THAT MEETS UPC FOR SLOPE REQUIREMENTS.

CRAWLSPACE NOTES

AF103.4 RADON CONTROL METHODS ENTRY ROUTES.
POTENTIAL RADON ENTRY ROUTES SHALL BE CLOSED IN ACCORDANCE WITH SECTIONS AF103.4.1 THROUGH AF103.4.10:

1. ANY OPENINGS THAT PENETRATE CONCRETE SLABS OR OTHER FLOOR ASSEMBLIES, SHALL BE FILLED WITH A POLYURETHANE CAULK OR EQUIVALENT SEALANT.
2. ANY JOINTS IN CONCRETE SLABS OR BETWEEN SLABS AND FOUNDATION WALLS SHALL BE SEALED WITH A CAULK OR SEALANT. GAPS AND JOINTS SHALL BE CLEARED OF LOOSE MATERIAL AND FILLED WITH POLYURETHANE CAULK OR OTHER ELASTOMERIC SEALANT.
3. CONDENSATE DRAINS SHALL BE TRAPPED OR ROUTED THROUGH NONPERFORATED PIPE TO DAYLIGHT.
4. SUMP PITS OPEN TO SOIL OR SERVING AS THE TERMINATION POINT FOR SUBSLAB OR EXTERIOR DRAIN TILE LOOPS SHALL BE COVERED WITH A GASKETED OR OTHERWISE SEALED LID. SUMPS USED AS THE SUCTION POINT IN A SUBSLAB DEPRESSURIZATION SYSTEM SHALL HAVE A LID DESIGNED TO ACCOMMODATE THE VENT PIPE. SUMPS USED AS A FLOOR DRAIN SHALL HAVE A LID EQUIPPED WITH A TRAPPED INLET.
5. FOUNDATION WALLS SHALL BE CONSTRUCTED TO PREVENT THE PASSAGE OF AIR FROM THE INTERIOR OF THE WALL INTO THE LIVING SPACE. WHERE A BRICK VENEER OR OTHER MASONRY LEDGE IS INSTALLED, THE COURSE IMMEDIATELY BELOW THAT LEDGE SHALL BE SEALED. ANY OPENINGS AROUND ALL PENETRATIONS OF BOTH EXTERIOR AND INTERIOR SURFACES BELOW THE GROUND SURFACE SHALL BE FILLED WITH POLYURETHANE CAULK OR EQUIVALENT SEALANT. PENETRATIONS OF CONCRETE WALLS SHALL BE FILLED.
6. THE EXTERIOR SURFACES OF PORTIONS OF CONCRETE AND MASONRY BLOCK WALLS BELOW THE GROUND SURFACE SHALL BE DAMPPROOFED IN ACCORDANCE WITH SECTION R406.
7. AIR-HANDLING UNITS IN CRAWLSPACES SHALL BE SEALED TO PREVENT AIR FROM BEING DRAWN INTO THE UNIT.
8. DUCTWORK PASSING THROUGH OR BENEATH A SLAB SHALL BE OF SEAMLESS MATERIAL UNLESS THE AIR-HANDLING SYSTEM IS DESIGNED TO MAINTAIN CONTINUOUS POSITIVE PRESSURE WITHIN SUCH DUCTING. JOINTS IN SUCH DUCTWORK SHALL BE SEALED TO PREVENT AIR LEAKAGE.DUCTWORK LOCATED IN CRAWL SPACES SHALL HAVE SEAMS AND JOINTS SEALED BY CLOSURE SYSTEMS IN ACCORDANCE WITH SECTION M1601.4.1.
9. OPENINGS AROUND ALL PENETRATIONS THROUGH FLOORS ABOVE CRAWLSPACES SHALL BE CAULKED OR OTHERWISE FILLED TO PREVENT AIR LEAKAGE.
10. ACCESS DOORS AND OTHER OPENINGS OR PENETRATIONS BETWEEN BASEMENTS AND ADJOINING CRAWL SPACES SHALL BE CLOSED, GASKETED OR OTHERWISE FILLED TO PREVENT AIR LEAKAGE.

AF103.5 EXCEPTION
A PASSIVE SUBMEMBRANE SYSTEM IS NOT REQ'D WHERE A MECHANICAL CRAWL SPACE VENTILATION SYSTEM IS INSTALLED.

CRAWLSPACE NOTES (CONTINUED)

AF104.1 TESTING
RADON TESTING SHALL BE IN ACCORDANCE WITH SECTIONS AF104.1 THROUGH AF104.11:

1. TESTING SHALL BE PERFORMED AFTER THE DWELLING PASSES ITS AIR TIGHTNESS TEST.
2. TESTING SHALL BE PERFORMED AFTER THE RADON CONTROL SYSTEM AND HVAC INSTALLATIONS ARE COMPLETE. THE HVAC SYSTEM SHALL BE OPERATING DURING THE TEST. WHERE THE RADON SYSTEM HAS AN INSTALLED FAN, THE DWELLING SHALL BE TESTED WITH THE RADON FAN OPERATING.
3. TESTING SHALL BE PERFORMED AT THE LOWEST OCCUPIED FLOOR LEVEL, WHETHER OR NOT THAT SPACE IS FINISHED. SPACES THAT ARE PHYSICALLY SEPARATED AND SERVED BY DIFFERENT HVAC SYSTEMS SHALL BE TESTED SEPARATELY.
4. TESTING SHALL NOT BE PERFORMED IN A CLOSET, HALLWAY, STAIRWAY, LAUNDRY ROOM, FURNACE ROOM, BATHROOM OR KITCHEN.
5. TESTING SHALL BE PERFORMED WITH A COMMERCIALLY AVAILABLE RADON TEST KIT OR SHALL BE PERFORMED BY AN APPROVED THIRD PARTY WITH A CONTINUOUS RADON MONITOR. TESTING WITH TEST KITS SHALL INCLUDE TWO TESTS, AND THE TEST RESULTS SHALL BE AVERAGED. TESTING SHALL BE IN ACCORDANCE WITH THIS SECTION AND THE TESTING LABORATORY KIT MANUFACTURER'S INSTRUCTIONS.
6. TESTING SHALL BE PERFORMED WITH THE WINDOWS CLOSED. TESTING SHALL BE PERFORMED WITH THE EXTERIOR DOORS CLOSED, EXCEPT WHEN BEING USED FOR ENTRANCE OR EXIT. WINDOWS AND DOORS SHALL BE CLOSED FOR NOT LESS THAN 12 HOURS PRIOR TO THE TESTING.
7. TESTING SHALL BE PERFORMED BY THE BUILDER, A REGISTERED DESIGN PROFESSIONAL, OR AN APPROVED THIRD PARTY.
8. TESTING SHALL BE CONDUCTED OVER A PERIOD OF NOT LESS THAN 48 HOURS OR NOT LESS THAN THE PERIOD SPECIFIED BY THE TESTING DEVICE MANUFACTURER, WHICHEVER IS LONGER.
9. WRITTEN RADON TEST RESULTS SHALL BE PROVIDED BY THE TEST LAB OR TESTING PARTY. THE FINAL WRITTEN TEST REPORT WITH RESULTS LESS THAN 4 PICOCURIES PER LITER (pCi/L) SHALL BE PROVIDED TO THE CODE OFFICIAL.
10. WHERE THE RADON TEST RESULT IS 4 pCi/L OR GREATER, THE FAN FOR THE RADON VENT PIPE SHALL BE INSTALLED AS SPECIFIED IN SECTIONS AF103.9 AND AN AF103.12.
11. WHERE THE RADON TEST RESULT IS 4 pCi/L OR GREATER, THE SYSTEM SHALL BE MODIFIED AND RETESTED UNTIL THE TEST RESULT IS LESS THAN 4 pCi/L.

WHOLE-HOUSE VENTILATION SYSTEM

M1505.4.1 SYSTEM DESIGN.
EACH DWELLING UNIT SHALL BE EQUIPPED WITH A VENTILATION SYSTEM COMPLYING WITH 2021 IRC M1505.4.1, M1505.4.2 AND M1505.4.3. COMPLIANCE IS ALSO PERMITTED TO BE DEMONSTRATED THROUGH COMPLIANCE WITH THE 2021 INTERNATIONAL MECHANICAL CODE.

M1505.4.2 CONTROL AND OPERATION.

1. THE WHOLE-HOUSE VENTILATION SYSTEM SHALL BE CONTROLLED WITH MANUAL SWITCHES, TIMERS OR OTHER MEANS THAT PROVIDE FOR AUTOMATIC OPERATION OF THE VENTILATION SYSTEM THAT ARE READILY ACCESSIBLE BY THE OCCUPANT.
2. WHOLE-HOUSE MECHANICAL VENTILATION SYSTEM SHALL BE PROVIDED WITH CONTROLS THAT ENABLE MANUAL OVERRIDE OFF OF THE SYSTEM BY THE OCCUPANT DURING PERIODS OF POOR OUTDOOR AIR QUALITY. CONTROLS SHALL INCLUDE PERMANENT TEXT OR A SYMBOL INDICATING THEIR FUNCTION. RECOMMENDED CONTROL PERMANENT LABELING TO INCLUDE TEXT SIMILAR TO THE FOLLOWING: "LEAVE ON UNLESS OUTDOOR AIR QUALITY IS VERY POOR." MANUAL CONTROLS SHALL BE READILY ACCESSIBLE BY THE OCCUPANT.
3. WHOLE-HOUSE VENTILATION SYSTEMS SHALL BE CONFIGURED TO OPERATE CONTINUOUSLY EXCEPT WHERE INTERMITTENT OFF CONTROLS AND SIZING ARE PROVIDED IN ACCORDANCE WITH SECTION M1505.4.3.2.

M1505.4.3 MECHANICAL VENTILATION RATE.
THE WHOLE HOUSE MECHANICAL VENTILATION SYSTEM SHALL PROVIDE OUTDOOR AIR TO EACH HABITABLE SPACE AT A CONTINUOUS RATE OF NOT LESS THAN THAT DETERMINED IN ACCORDANCE WITH EQUATION 15-1.

EQUATION 15-1: $R = (0.01 * A) + [7.5 * (N + 1)]$

WHERE R IS THE REQ'D VENTILATION RATE, A IS THE GROSS FLOOR AREA AND N IS NUMBER OF BEDROOMS

$R = (0.01 * 5579) + [7.5 * (5 + 1)] = 100.79 \approx 101$ CFM

M1505.4.3.1 VENTILATION QUALITY ADJUSTMENT.
THE MINIMUM WHOLE-HOUSE VENTILATION RATE FROM 1505.4.3 SHALL BE ADJUSTED BY THE SYSTEM COEFFICIENT IN TABLE M1505.4.3(2).

TABLE M1505.4.3(2): SYSTEM COEFFICIENT

SYSTEM TYPE	DISTRIBUTED	NOT DISTRIBUTED
BALANCED	1.0	1.25
NOT BALANCED	1.25	1.5

M1505.4.3.2 INTERMITTENTLY OPERATING VENTILATION SYSTEMS.
THE WHOLE-HOUSE MECHANICAL VENTILATION SYSTEM IS PERMITTED TO OPERATE INTERMITTENTLY WHERE THE SYSTEM HAS CONTROLS THAT ENABLE OPERATION FOR NOT LESS THAN 25% OF EACH 4-HOUR SEGMENT AND THE VENTILATION RATE PRESCRIBED IN TABLE M1507.3.3(1) IS MULTIPLIED BY THE FACTOR DETERMINED IN ACCORDANCE WITH TABLE M1505.4.3(3).

TABLE M1505.4.3.2: VENTILATION RATE FACTORS (INTERMITTENTLY OPERATING SYSTEM)

RUN TIME % (4HR SEGMENT)	50%	66%	75%	100%
FACTOR	2	1.5	1.3	1.0

VENTILATION CALC
SYSTEM COEFFICIENT: 1.0 (BALANCED, DISTRIBUTED SYSTEM PROPOSED)
IF RUN CONTINUOUSLY: 101 CFM
IF RUN INTERMITTENTLY: 50%: 202 CFM, 66%: 152 CFM, 75%: 132 CFM

PREFERRED WHOLE-HOUSE VENTILATION OPTION:

M1505.4.1.4 BALANCED WHOLE-HOUSE VENTILATION SYSTEM
A BALANCED WHOLE-HOUSE VENTILATION SYSTEM SHALL INCLUDE BOTH SUPPLY AND EXHAUST FANS. THE SUPPLY AND EXHAUST FANS SHALL HAVE AIRFLOW THAT IS WITHIN 10 PERCENT OF EACH OTHER. THE TESTED AND BALANCED TOTAL MECHANICAL EXHAUST AIRFLOW RATE IS WITHIN 10 PERCENT OR 5 CFM, WHICHEVER IS GREATER, OF THE TOTAL MECHANICAL SUPPLY AIRFLOW RATE. THE FLOW RATE TEST RESULTS SHALL BE SUBMITTED AND POSTED IN ACCORDANCE WITH 2021 IRC M1505.4.1.7. THE EXHAUST FAN SHALL MEET THE REQUIREMENTS OF 2021 IRC M1505.4.1.2. THE SUPPLY FAN SHALL MEET THE REQUIREMENTS OF 2021 IRC M1505.4.1.3. BALANCED VENTILATION SYSTEMS WITH BOTH SUPPLY AND EXHAUST FANS IN A PACKAGED PRODUCT, SUCH AS AN ERV/HRV SHALL MEET THE REQUIREMENTS OF HVI 920, AS APPLICABLE. LOCAL EXHAUST SYSTEMS THAT ARE NOT A COMPONENT OF THE WHOLE-HOUSE MECHANICAL VENTILATION SYSTEM ARE EXEMPT FROM THE BALANCED AIRFLOW CALCULATION.

M1506.2 EXHAUST OPENINGS.
AIR EXHAUST OPENINGS SHALL TERMINATE AS FOLLOWS:

1. NOT LESS THAN 3 FEET (914 MM) FROM PROPERTY LINES.
2. NOT LESS THAN 3 FEET (914 MM) FROM GRAVITY AIR INTAKE OPENINGS, OPERABLE WINDOWS AND DOORS.
3. NOT LESS THAN 10 FEET (3048 MM) FROM MECHANICAL AIR INTAKE OPENINGS EXCEPT WHERE EITHER OF THE FOLLOWING APPLY:
   - 3.1. THE EXHAUST OPENING IS LOCATED NOT LESS THAN 3 FEET (914 MM) ABOVE THE AIR INTAKE OPENING.
   - 3.2. THE EXHAUST OPENING IS PART OF A FACTORY-BUILT INTAKE/ EXHAUST COMBINATION TERMINATION FITTING INSTALLED IN ACCORDANCE WITH THE MANUFACTURER'S INSTRUCTIONS, AND THE EXHAUST AIR IS DRAWN FROM A LIVING SPACE.
4. OPENINGS SHALL COMPLY WITH SECTIONS R303.5.2 AND R303.6.

R303.5.1 OPENING LOCATION.
MECHANICAL AND GRAVITY OUTDOOR AIR INTAKE OPENINGS SHALL BE LOCATED A MINIMUM OF 10 FEET FROM ANY HAZARDOUS OR NOXIOUS CONTAMINANT, SUCH AS VENTS, CHIMNEYS, PLUMBING VENTS, STREETS, ALLEYS, PARKING LOTS AND LOADING DOCKS, EXCEPT AS OTHERWISE SPECIFIED BY THE 2021 IRC. FOR THE PURPOSE OF THIS SECTION, THE EXHAUST FROM DWELLING UNIT TOILET ROOMS, BATHROOMS AND KITCHENS SHALL NOT BE CONSIDERED AS HAZARDOUS OR NOXIOUS.

EXCEPTIONS:
- THE 10-FOOT SEPARATION IS NOT REQUIRED WHERE THE INTAKE OPENING IS LOCATED 3 FEET OR GREATER BELOW THE CONTAMINANT SOURCE.
- VENTS AND CHIMNEYS SERVING FUEL-BURNING APPLIANCES SHALL BE TERMINATED IN ACCORDANCE WITH THE APPLICABLE PROVISIONS OF 2021 IRC CHAPTERS 18 AND 24.
- CLOTHES DRYER EXHAUST DUCTS SHALL BE TERMINATED IN ACCORDANCE WITH 2021 IRC M1502.3.

WHOLE-HOUSE VENTILATION SYSTEM (CONTINUED)

R303.5.2 EXHAUST OPENINGS.
EXHAUST AIR SHALL NOT BE DIRECTED ONTO WALKWAYS. ALL EXHAUST DUCTS SHALL TERMINATE OUTSIDE THE BUILDING. TERMINAL ELEMENTS SHALL HAVE AT LEAST THE EQUIVALENT NET FREE AREA OF THE DUCT WORK.

R303.5.2.1 EXHAUST DUCTS.
EXHAUST DUCTS SHALL BE EQUIPPED WITH BACK-DRAFT DAMPERS. ALL EXHAUST DUCTS IN UNCONDITIONED SPACES SHALL BE INSULATED TO A MINIMUM OF R-4.

R303.6 OUTSIDE OPENING PROTECTION.
AIR EXHAUST AND INTAKE OPENINGS THAT TERMINATE OUTDOORS SHALL BE PROTECTED WITH CORROSION-RESISTANT SCREENS, LOUVERS OR GRILLES HAVING AN OPENING SIZE OF NOT LESS THAN 1/4 INCH AND A MAXIMUM OPENING SIZE OF 1/2 INCH, IN ANY DIMENSION. OPENINGS SHALL BE PROTECTED AGAINST LOCAL WEATHER CONDITIONS. OUTDOOR AIR EXHAUST AND INTAKE OPENINGS SHALL MEET THE PROVISIONS FOR EXTERIOR WALL OPENING PROTECTIVES IN ACCORDANCE WITH THE 2021 IRC.

ENERGY AND MECHANICAL NOTES

1. ALL MECHANICAL WORK TO BE DESIGNED BY SUBCONTRACTOR AND SHALL COMPLY WITH ALL APPLICABLE CODES AND ORDINANCES.
2. THE MECHANICAL WORK MUST ADHERE TO ALL REQUIREMENTS OF THE CONSTRUCTION DOCUMENTS.
3. VENTILATION OF ALL AREAS SHALL BE IN CONFORMANCE WITH WAC 51-11 AND WAC 51-13, 2021 IRC CHAPTER 15, TABLES M1505.4.3(1), M1505.4.3(2) & M1505.4.3.2.
4. ALL EXTERIOR JOINTS AROUND WINDOWS AND DOORS, OPENINGS BETWEEN WALLS AND ROOF OR FOUNDATIONS, OPENINGS AT PENETRATIONS AND ALL OTHER SUCH OPENINGS SHALL BE SEALED, CAULKED, OR HAVE A GASKET OR WEATHER STRIPPING TO LIMIT AIR LEAKAGE PER 2021 WSEC.
5. 2021 WSEC PRESCRIPTIVE REQUIREMENTS (ZONE 4C, PRESCRIPTIVE OPTION 3):

CREDITS REQUIRED: 9.0
THE FOLLOWING CREDITS ARE PURSUED:
FUEL NORMALIZATION OPTION 4: HEAT PUMP (3.0 CREDITS)
OPTION 1.2: EFFICIENT BUILDING ENVELOPE (1.0 CREDIT)
OPTION 2.2: AIR LEAKAGE CONTROL AND EFFICIENT VENTILATION (1.5 CREDITS)
OPTION 3.3: HIGH EFFICIENCY HVAC (0.5 CREDITS)
OPTION 3.11: HIGH EFFICIENCY HVAC SMART THERMOSTAT (0.5 CREDITS)
OPTION 4: HIGH EFFICIENCY HVAC DISTRIBUTION SYSTEM (0.5 CREDITS)
OPTION 5.6: EFFICIENT WATER HEATING (2.0 CREDITS)

PURSUANT TO 2021 SEC R402.1.5, THE BUILDING SHALL BE CONSIDERED COMPLIANT WITH SEC TABLE R402.1.2 IF THE PROPOSED BUILDING THERMAL ENVELOPE IS LESS THAN OR EQUAL TO THE TARGET UA. THE BELOW SUMMARIZES THE PROPOSED AND TARGET UA CALCULATIONS. REF. A0.2 FOR DETAILED CALCULATIONS.

	TARGET	PROPOSED
DOORS UA:	45.6	42.6
OVERHEAD GLAZING UA:	0.0	0.0
VERTICAL GLAZING UA:	187.2	174.7
FLAT/VAULTED CEILINGS UA:	47.5	39.6
ABOVE GRADE WALLS UA:	143.0	109.2
FLOORS OVER UNCONDITIONED SPACE UA:	0.0	0.0
SLAB ON GRADE UA:	0.0	0.0
BELOW GRADE WALLS UA:	57.1	65.2
BELOW GRADE SLAB UA:	95.5	57.5
TOTAL UA:	575.9	488.8

- CREDIT OPTION 1.2: REDUCE THE TOTAL CONDUCTIVE UA BY 15%. PROPOSED REDUCTION IS 15.1%.
- CREDIT OPTION 2.2: THE COMPLETED PROJECT SHALL PASS A BLOWER DOOR TEST WITH A TESTED AIR LEAKAGE OF 1.5 AIR CHANGES PER HOUR (MAX.) AT 50 PASCALS. WHOLE HOUSE VENTILATION SHALL BE PROVIDED BY A HEAT RECOVERY VENTILATION SYSTEM WITH A MIN. SENSIBLE HEAT RECOVERY EFFICIENCY OF 0.75. BASIS OF DESIGN SHALL BE HRV6-150 AS MFR'D BY LENNOX (0.82 SENSIBLE HEAT RECOVERY) OR APPROVED EQUAL. HRV SYSTEMS SHALL BE DESIGN/BUILD BY OTHERS.
- CREDIT OPTION 3.3: DUCTED HEAT PUMPS WITH A MINIMUM HSPF2 OF 8.1 (HSPF 9.5) AND NO ELECTRIC RESISTANCE HEATING. BASIS OF DESIGN SHALL BE RP19AY60AJVCA HEAT PUMP AS MFR'D BY RHEEM (HSPF2 8.5) AND RHMVY6021SEACAJ AIR HANDLER OR APPROVED EQUALS. HEAT PUMP SYSTEMS SHALL BE DESIGN-BUILD BY OTHERS.
- CREDIT OPTION 3.11: THERMOSTATS SHALL MEET ENERGY STAR CERTIFIED SMART THERMOSTATS/EPA ENERGY STAR SPECIFICATIONS. CONTROL SYSTEMS SHALL BE DESIGN-BUILD.
- CREDIT OPTION 4.1: HVAC EQUIPMENT AND ASSOCIATED DUCT SYSTEMS SHALL COMPLY WITH THE REQUIREMENTS OF SECTION R403.3.2.
- CREDIT OPTION 5.6: WATER HEATING SYSTEM SHALL BE AN ELECTRIC HEAT PUMP WATER HEATER MEETING TIER III OF NEEA'S ADVANCED WATER HEATING SPECIFICATION. BASIS OF DESIGN SHALL BE XE65T10H45U1 AS MFR'D BY RHEEM OR APPROVED EQUAL. WATER HEATING SHALL BE DESIGN/BUILD BY OTHERS.
- AN ALTERNATIVE HEATING SOURCE SIZED AT 0.5 WATTS / SF OR 500W, WHICHEVER IS LARGER, MAY BE INSTALLED PURSUANT TO WSEC TABLE 406.3 FOOTNOTE 2.

7. GLAZING AREA ALLOWED IS UNLIMITED, GROUP R-3 ONLY.
8. ALL FURTHER CALCULATIONS ARE TO BE PROVIDED BY THE MECHANICAL CONTRACTOR PRIOR TO APPLYING FOR A MECHANICAL PERMIT.
9. HEATING DESIGN TEMPERATURES: (PER 2021 WSEC) HEATING: 68° INSIDE & 24° OUTSIDE.
10. SOURCE SPECIFIC VENTILATION (EXHAUST) SHALL BE PROVIDED IN BATHROOMS, KITCHENS, LAUNDRY ROOMS, POOL ROOMS AS WELL AS IN OTHER ROOMS WHERE EXCESS WATER VAPOR OR COOKING ODOR ARE PRODUCED, AS REQUIRED BY 2021 IRC TABLE M1505.4.4.
11. A WHOLE HOUSE VENTILATION SYSTEM SHALL BE INSTALLED OF EITHER INTERMITTENT OR CONTINUOUS OPERATION AS REQUIRED BY 2021 IRC 1505.4.1.
12. A RESIDENTIAL ENERGY COMPLIANCE CERTIFICATE COMPLYING WITH WSEC 401.3 IS REQUIRED TO BE COMPLETED BY THE DESIGN PROFESSIONAL OR BUILDER AND PERMANENTLY POSTED WITHIN 3 FT OF THE ELECTRICAL PANEL PRIOR TO FINAL INSPECTION.
13. INSULATION INSTALLERS SHALL PROVIDE A CERTIFICATION LISTING THE TYPE, MANUFACTURER AND R-VALUE OF INSULATION INSTALLED IN EACH ELEMENT OF THE BUILDING THERMAL ENVELOPE PER WSEC R303.1.1.
14. THE BUILDING OFFICIAL, UPON NOTIFICATION, SHALL MAKE INSPECTIONS IN ADDITION TO THOSE INSPECTIONS REQUIRED IN SECTION R109 OF THE IRC. THESE INSPECTIONS ARE DESCRIBED IN WSEC R105.2.
15. A BAFFLE SHALL BE INSTALLED ADJACENT TO SOFFIT AND EAVE VENTS FOR AIR PERMEABLE INSULATIONS IN VENTED ATTICS PER WSEC R402.2.3.
16. ACCESS HATCHES FROM CONDITIONED SPACES TO UNCONDITIONED SPACES SHALL BE WEATHER STRIPPED AND INSULATED TO A LEVEL EQUIVALENT TO THE INSULATION ON THE SURROUNDING SURFACES PER WSEC R402.2.4.1.
17. EACH DWELLING UNIT IS REQUIRED TO BE PROVIDED WITH AT LEAST ONE THERMOSTAT FOR THE REGULATION OF TEMPERATURE PER 2021 WSEC 403.1.
18. PER 2021 WSEC R402.2.7 FLOOR INSULATION SHALL BE INSTALLED TO MAINTAIN PERMANENT CONTACT WITH THE UNDERSIDE OF THE SUB-FLOOR DECKING. INSULATION SUPPORTS SHALL BE INSTALLED SO SPACING IS NO MORE THAN 24 INCHES ON CENTER. FOUNDATION VENTS SHALL BE PLACED SO THAT THE TOP OF THE VENT IS BELOW THE LOWER SURFACE OF THE FLOOR INSULATION.
19. ALL PERMANENTLY INSTALLED LIGHTING FIXTURES, EXCLUDING KITCHEN APPLIANCE LIGHTING FIXTURES, SHALL CONTAIN ONLY HIGH-EFFICACY LIGHTING SOURCES PER 2021 WSEC R404.1.

CITIZEN DESIGN

NEW CONSTRUCTION
MERCER ISLAND 6427
6427 E MERCER WAY, MERCER ISLAND, WA 98040

City of MERCER ISLAND
PERMIT
June 18, 2025

PERMIT NUMBER

FOR PLANNING DEPT USE ONLY

ARCHITECTURAL GENERAL NOTES
SCALE: AS NOTED
A0.1

ENERGY CODE COMPLIANCE CALCULATOR

Project Information
Mercer Island 6427
6427 E Mercer Way
Mercer Island, WA 98040

Contact Information
Citizen Design
Attn: Jacob Young
10 Dravus Street
Seattle, WA 98109

Messages / Comments * RESULT= PASS

UA Reduction = 87.12, Proposed UA is better than baseline by 15.1%

UA reduction meets percent target of selected Option 1.2
Window area is 11% of floor area
-
Whole House Mechanical Ventilation Airflow Rate: 95 CFM with Run Time Fercent of 100%, Balanced, Distributed
Maximum allowable total measured duct leakage: 451 CFM25

* Results assume your inputs are complete and correct. Results do not constitute an approval. Analysis should be reviewed by your AHJ.

ANALYSIS SET UP

What code compliance pathway are you using?	Total UA Alternative, Whole Building Trade Off Analysis
Project Building Type?	New Construction
Occupancy Type?	R3 Single family dwellings and townhouses
Code Version?	WSEC 2021
Classification:	Large Dwelling Unit – 5637 sq. ft.
Baseline Description:	Code Baseline - Maximum baseline window area is 15% of floor area.
About Your Selection:	No exempt window or door areas
	-

RESULTS - Comparison of Baseline and Proposed Design **

Component Performance, R occupancies	Baseline U *	Baseline Area	Baseline UA	Proposed Design U	Proposed Design Area	Proposed Design UA
Doors U =	0.300	152	45.6	0.280	152	42.6
Overhead Glazing U =	0.500	0	0.0		0	0.0
Vertical Glazing U =	0.300	624	187.2	0.280	624	174.7
Flat/Vaulted Ceilings U =	0.024	1,978	47.5	0.020	1,978	39.6
Wall (above grade) U =	0.056	2,554	143.0	0.043	2,554	109.2
Floors over Crawlspace U =	0.029	0	0.0		0	0.0
Slab on Grade F =	0.540	0	0.0		0	0.0
Below Grade Wall U =	0.035	1,630	57.1	0.040	1,630	65.2
Below Grade Slab F =	0.500	191	95.5	0.301	191	57.5

* Values from Table R402.1.2 (Oct 2023)

Baseline UA Total	575.9	**Proposed UA Total**	488.8
Required Credits	9.0	**Proposed Credits**	9.0 from Tables 406.2 and 406.3
		UA Percent Reduction	15%
		UA Reduction	87.1

** Results assume your inputs are complete and correct. Results do not constitute an approval. Analysis should be reviewed by your AHJ.

Table R406.2 Energy Equalization Credits

System No.	Full Description	Select System Type	Fuel Nonmalization Credits (406.2)	Energy Credits (406.3)	Total Credits (406.2 & 406.3)
4	For heating system using a heat pump that meets federal standards for the equipment listed in Table C403.3.2(2) or Table C403.3.2(5) OR Air to Water heat pump units that are configured to provide both heating and cooling and are rated in accordance with AHRI 550/590	Variable Refrigerant Heat Pump or Air-to-Water Heat Pump	3.0	6.0	9.0

Table R406.3 Energy Credits

Option No.	Category	Select Options	Energy Credits	Brief Description of Selected Options*
1	Efficient Building Envelope	Option 1.2	1.0	Prescriptive compliance per Table 402.1.3 / U-0.25 vertical fenestration / R-38 floors or R-10 perimeter & fully insulated slab. Or 15% reduction in UA per section R402.1.5
2	Air Leakage Control and Efficient Ventilation	Option 2.2	1.5	Per Section R402.4.1.2 /1.5 ACH50 / For R-2, 0.20 cfm per ft2 at 50 Pa / HRV with min SHR eff of 0.75 per IRC Section M1505.3 or IMC Section 403.8
3.1 -3.10	High Efficiency HVAC	Option 3.3	0.5	Air Source centrally ducted Heat Pump. Min HSPF2 of 9 (HSPF of 9.5), in areas where winter design temp. is 23° F or less, a NEEP or ASHP cold climate unit shall be installed.
3.11	High Efficiency HVAC: Smart Thermostat	Option 3.11	0.5	Connected Energy Star Certified smart thermostat.
4	High Efficiency HVAC Distribution System	Option 4.1	0.5	Ducts/distribution system in conditioned space per R403.3.2 Electric resistance, hydronic, ductless and gas fired systems < 80% AFUE systems not permitted
5.1	Efficient Water Heating: Drain Heat Recovery		0.0	
5.2	Efficient Water Heating: Compact Hot Water Distribution		0.0	
5.3-5.8	Efficient Water Heating	Option 5.6	2.0	Electric heat pump water heater meeting NEEA Tier 3.
6	Renewable Electric Energy	kWh	0.0	
7	Appliance Package		0.0	
	Energy Credits		**6.0**	

***Refer to WSEC 2015 Table R406.2 for complete option descriptions and requirements**

THERMAL ENVELOPE DETAILS - Proposed Design

Conditioned Floor Area, Proposed Design	5,637 sq. ft
Classification	Large Dwelling Unit
Notes	

Exterior Doors

Plan ID	Component Description	Ref.	Door U	Qt.	Width Feet	Width Inch	Height Feet	Height Inch	Area	UA
4080	U=0.28	-	0.28	1	4	0	8	0	32	9.0
12080	U=0.28	-	0.28	1	12	0	8	0	96	26.9
3080	U=0.28	-	0.28	1	3	0	8	0	24	6.7
									0	0.0
									0	0.0
									0	0.0
									0	0.0
									0	0.0
									0	0.0
									0	0.0
									0	0.0
							Sum of Area and UA		152	42.6
							Exterior Doors Area Weighted U			0.280

Overhead Glazing

Plan ID	Component Description	Ref.	Glazing U	Qt.	Width Feet	Width Inch	Height Feet	Height Inch	Area	UA
N/A									-	
									-	
									-	
									-	
							Sum of Area and UA		0.0	0
							Overhead Glazing Area Weighted U			

Vertical Glazing Schedule — Rows to Show: 15

	Plan ID	Component Description	Ref.	Glazing U	Qt.	Width Feet	Width Inch	Height Feet	Height Inch	Area	UA
1	1,25,26	U=0.28 (2018 1.3, 1.7)	Table 406.2	0.28	3	7	0	5	0	105.0	29.40
2	2, 3	U=0.28 (2018 1.3, 1.7)	Table 406.2	0.28	2	5	0	5	0	50.0	14.00
3	4,5	U=0.28 (2018 1.3, 1.7)	Table 406.2	0.28	2	4	0	6	0	48.0	13.44
4	6	U=0.28 (2018 1.3, 1.7)	Table 406.2	0.28	1	5	0	4	6	22.5	6.30
5	9, 11	U=0.28 (2018 1.3, 1.7)	Table 406.2	0.28	2	7	0	6	0	84.0	23.52
6	10	U=0.28 (2018 1.3, 1.7)	Table 406.2	0.28	1	3	0	8	0	24.0	6.72
7	12,13	U=0.28 (2018 1.3, 1.7)	Table 406.2	0.28	2	1	0	3	8	10.5	2.94
8	14,15,22	U=0.28 (2018 1.3, 1.7)	Table 406.2	0.28	3	2	0	4	0	24.0	6.72
9	16	U=0.28 (2018 1.3, 1.7)	Table 406.2	0.28	1	5	0	4	0	20.0	5.60
10	17	U=0.28 (2018 1.3, 1.7)	Table 406.2	0.28	1	6	0	6	0	36.0	10.08
11	18, 20	U=0.28 (2018 1.3, 1.7)	Table 406.2	0.28	2	6	0	5	0	60.0	16.80
12	19	U=0.28 (2018 1.3, 1.7)	Table 406.2	0.28	1	8	0	5	0	40.0	11.20
13	21,24	U=0.28 (2018 1.3, 1.7)	Table 406.2	0.28	2	6	0	4	0	48.0	13.44
14	23	U=0.28 (2018 1.3, 1.7)	Table 406.2	0.28	2	2	0	4	0	16.0	4.48
15	27,28,29	U=0.28 (2018 1.3, 1.7)	Table 406.2	0.28	3	3	0	4	0	36.0	10.08
								Sum of Area and UA		624.0	174.7
								Vertical Glazing Area Weighted U			0.280
								Vertical Glazing and Doors Area Weighted U			0.280

Flat/Vaulted Ceilings

Plan ID	Component Description	Ref.	Attic U	Area	UA
R1	R49 batt Vault 24oc	-	0.020	1,662	33.2
R3	R49 batt Vault 24oc	-	0.020	316	6.3
			Sum of Area and UA	1,978	39.5

Walls (Above Grade)

Plan ID	Component Description	Ref.	Wall U	Net Area	UA
W1	R21 cavity+R5 foam INT 2X6W Lap	10-5	0.041	2,209	91
W4	R21 cavity+R0 foam INT 2X6W Lap (Code Baseline)	10-5	0.054	345	19
			Sum of Area and UA	2,554	109

Floor (over crawl or exterior)

Plan ID	Component Description	Ref.	Floor U	Area	UA
N/A					
			Sum of Area and UA	0	0

Slab on Grade (less than 2 feet below grade)

Plan ID	Component Description	Ref.	Slab F	Slab Perim	Slab FP
N/A					
			Sum of Perimeter and FP	0	0

Below Grade Walls and Slabs

Plan ID	Component Description	Slab Depth	Ref.	Wall U	Wall Area	Wall UA	Slab F	Slab Perim	Slab UA
F3	R11 Batt + R5 ci R10 Fully Underslab	7' depth	Bayton & Ker	0.040	1,630	65.2	0.301	191	57
				Sum of Area, Length and UA	1,630	65.2		191	57

Links to Download Forms, Checklists and Other Resources — Link

Compliance Certificate	Compliance Certificate	Instructions
Insulation Certificate for Residential New Construction	Insulation Certificate	
Duct Testing Affadavits		
Existing Construction	Affidavit, Existing	
New Construction	Affidavit, New	
Prescriptive Checklist for 2018 WSEC	Prescriptive Checklist	
Alterations (Remodel) Worksheet	Worksheet	
EER SEER2 COP HSPF2 Converter	https://www.adiccteengineering.com/eer-seer2-cop-hspf2-kwton-converter	

Show Ventilation Calculator? Show

Ventilation Requirements

Conditioned Floor Area	5,637 sq. ft.	
Number of Bedrooms	5	
Run-Time Percent in Each 4-Hour Segment	100%	
Is the system Balanced?	Balanced	Verify system meets definition of 'Balanced Whole-House Ventilation'
Is the system Distributed?	Distributed	Verify system meets definition of 'Distributed Whole-House Ventilation'
Ventilation Code Section	IRC: Chapter 15	
Whole House Mechanical Ventilation Airflow Rate	95 CFM	

Show Distribution System Calculator? Show

HVAC Thermal Distribution System — Download RS-33 (2018) http://www.energy.wsu.edu/Documents/Duct%20Testing%20Standards%20_2018.pdf

Is this a hydronic heating system?	No
Location of Ducts	Conditioned Space
Location of Air Handler	Conditioned Space
Is Duct Testing Required?	Yes

Maximum Duct Leakage:

Maximum total measured duct leakage per square foot	0.08	CFM25 per sq. ft.
Maximum allowable total measured duct leakage	451	CFM25

A maximum of 10 feet of return ducts and 5 feet of supply ducts are allowed to be located outside of the building thermal envelope, if insulated and sealed per R403.3.7.

Show Heating System Sizing? Show

Heating System Sizing - Proposed Design — Try Out BetterBuiltNW's HVAC Sizing Tool: https://betterbuiltnw.com/resources/hvac-sizing-tool

Nearest Weather Station	Mercer Island	
Indoor Design Temperature	70 F	
Outdoor Design Temperature	25 F	
Design Temperature Difference (dT)	45 F	
Conditioned Floor Area, Proposed Design	5,637 ft2	
Conditioned Volume (Leave blank to use default of 8.5 ft. ceiling height)	50,733 ft3	**Average ceiling height =9 ft. Volume = 50733 ft3**
Average ceiling height	9.0 ft	
HVAC System Type	Heat Pump	
Location of HVAC Distribution System	Conditioned Space	
Sum of UA	489	
Envelope Heat Load (Sum of UA X dT)	21,994 Btu / Hour	
Air Leakage Heat Load (Volume X 0.6 X dT X .018)	24,656 Btu / Hour	
Building Design Heat Load Air Leakage + Envelope Heat Loss	46,651 Btu / Hour	
Building and Duct Heat Load For ducts located in unconditioned space: Sum of Building Heat Loss X 1.1 For ducts located in conditioned space or ductless: Sum of Building Heat Loss X 1	46,651 Btu / Hour	
Maximum Heat Equipment Output Building and Duct Heat Loss X 1.25 for heat pumps	58,313 Btu / Hour	
Building and Duct Heat Loss X 1.40 for all other systems	17.1 kW	

ORIGINAL SHEET SIZE: 24"x 36"

CITIZEN DESIGN

NEW CONSTRUCTION
MERCER ISLAND 6427
6427 E MERCER WAY, MERCER ISLAND, WA 98040

City of MERCER ISLAND

PERMIT

June 18, 2025

PERMIT NUMBER

FOR PLANNING DEPT USE ONLY

ENERGY CODE COMPLIANCE
SCALE: AS NOTED
A0.2

MERCER ISLAND DESIGN STANDARDS

CODE COMPLIANCE	IRC 2021 / TYPE VB / OCCUPANCY R-3 / NFPA 13R THROUGHOUT	
LOT AREA: (MICC 19.02.020.A)	REQUIRED: EXISTING:	15,000 SF 16,060.5 SF
LOT WIDTH: (MICC 19.02.020.A)	REQUIRED: EXISTING:	90 FT 120.58 FT
LOT DEPTH: (MICC 19.02.020.A)	REQUIRED: EXISTING:	80 FT 135 FT
FRONT + REAR YARDS: (MICC 19.02.020.C)		FRONT / REAR REQUIRED: 20 FT / 25 FT PROPOSED: 20 FT / 25 FT
SIDE YARDS: (MICC 19.02.020.C)	REQUIRED:	17% OF LOT WIDTH (TOTAL OF BOTH YARDS) 0.17 * 120.58 = 20.5 FT EACH YARD TO BE AT LEAST 33% OF TOTAL 0.33 * 20.5 = 6.77 FT
	PROPOSED:	(1) 6.75 FT SIDE YARD AND (1) 13.75 FT SIDE YARD 6.75 + 13.75 = 20.5
VARIABLE SIDE YARDS: (MICC 19.02.020.C)	REQUIRED:	EACH SIDE YARD ABUTTING AN INTERIOR LOT LINE TO BE 7.5 FT (MIN.) FOR GABLED STRUCTURES BETWEEN 18 FT AND 25 FT TALL. EACH SIDE YARD ABUTTING AN INTERIOR LOT LINE TO BE 10 FT (MIN.) FOR GABLED STRUCTURES MORE THAN 25 FT TALL.
	PROPOSED:	THE GARAGE NEAR THE WEST PROPERTY LINE IS 13'-5" TALL (MEASURED FROM FINAL GRADE) AND IS NOT SUBJECT TO THIS REQUIREMENT. THE HOUSE IS SUBJECT TO THE REQUIREMENT. AS THE GARAGE IS MORE THAN 10 FT WIDE AND LOCATED BETWEEN THE HOUSE AND THE WEST PROPERTY LINE, THE HOUSE IS COMPLIANT. ENHANCED SIDE YARD N/A TO STREET LOT LINE (EAST).
YARD EXCEPTIONS: (MICC 19.02.020.C.3) (MICC 19.02.050.D.4) (MICC 19.02.040.C.3)	ALLOWED:	ROCKERIES AND RETAINING WALLS ALLOWED IN REQUIRED YARDS PROVIDED THE TOTAL CUT SLOPE RETAINED DOES NOT EXCEED 144" (12 FT). EAVES MAY EXTEND NO MORE THAN 18" INTO REQUIRED YARDS. DECKS MAY EXTEND NO MORE THAN 36" INTO REQUIRED YARDS.
	PROPOSED:	RETAINING WALL LOCATED IN SIDE YARD DOES NOT EXCEED 12 FT IN HEIGHT. EAVES EXTEND NO MORE THAN 18" INTO REQUIRED YARDS. DECKS EXTEND NO MORE THAN 36" INTO REQUIRED YARDS.
GROSS FLOOR AREA: (MICC 19.02.020.D)	ALLOWED:	THE LESSER OF 10,000 SF OR 40% OF LOT AREA 0.40 * 16,060.5 = 6424.2 SF
	PROPOSED:	4588.55 SF (REF. A0.4)
BUILDING HEIGHT: (MICC 19.02.020.E.1)	ALLOWED:	30 FT ABOVE AVERAGE BUILDING ELEVATION 30' + 154.68' = 184.68'
	PROPOSED:	182.27' (REF. 1/A3.1)
FACADE HEIGHT: (MICC 19.02.020.E.2)	ALLOWED: PROPOSED:	30 FT ABOVE ABUTTING GRADE 26'-0 3/4" FT MAX. (REF. 1/A3.1)
LOT COVERAGE: (MICC 19.02.020.F.3)	ALLOWED:	VARIES WITH LOT SLOPE LOT SLOPE: (177-149) / 144.46 = 19.4% LOT COVERAGE: 0.35 * 16,060.5 = 5621.2± SF
	PROPOSED:	TOTAL: 5178.0± SF (N) SFR (INC. ROOF): 4354.4± SF (N) PAVEMENT: 823.6± SF
HARDSCAPE AREA: (MICC 19.02.020.F.3)	ALLOWED:	9% OF LOT AREA 0.09 * 16,060.5 = 1445.5 SF
	PROPOSED:	TOTAL: 159± SF (N) WALKWAY: 6± SF (N) PATIOS: 7± SF (N) RETAINING WALL: 105± SF (E) RETAINING WALL: 5± SF (E) STAIRS: 36± SF
LANDSCAPE AREA: (MICC 19.02.020.F.3)	REQUIRED:	VARIES WITH LOT SLOPE MIN. LANDSCAPE: 0.65 * 16,060.5 = 10,439.3 SF
	PROPOSED:	10,882.5± SF 16,060.5 - 5178.0 = 10,882.5
PARKING: (MICC 19.02.020.G)	REQUIRED: EXISTING:	(3) SPACES PER DWELLING (GFA > 3000 SF) (3) GARAGE SPACES (REF. A2.1)
TREE RETENTION: (MICC 19.10.060.A.2)	REQUIRED:	30% OF TREES 10"Ø AND LARGER TO BE RETAINED. IMPROVEMENTS TO BE LOCATED TO MINIMIZE TREE REMOVAL. (28) REGULATED (SIGNIFICANT + EXCEPTIONAL). VIABLE TREES PRESENT ON SUBJECT. 28 * 0.30 = 8.4 ≈ 8 TREES TO REMAIN (MIN.)
	PROPOSED:	(17) REGULATED TREES TO REMAIN. IMPROVEMENTS LOCATED IN THE LEAST HEAVILY FORESTED PORTION OF THE SITE TO MINIMIZE TREE REMOVAL. TREE REMOVAL OUTSIDE THE DISTURBANCE AREA IS LIMITED TO NONVIABLE AND HAZARD TREES. REF. A0.5 FOR DETAILS.
EXCEPTIONAL TREES: (MICC 19.10.060.A.3)	REQUIRED: PROPOSED:	EXCEPTIONAL TREES 24"Ø & LARGER TO REMAIN. ALL SUCH TREES TO BE RETAINED. (2) EXCEPTIONAL TREES LESS THAN 24"Ø TO BE REMOVED. REF. A0.5 FOR DETAILS.
TREE REPLACEMENT: (MICC 19.10.070)	REQUIRED:	REMOVE TREES TO BE REPLACED AS FOLLOWS: 10" < Ø ≤ 24": (2) TREES 24" < Ø ≤ 36": (3) TREES Ø > 36: (6) TREES EXCEPTIONAL TREES: (6) TREES SMALL TREE (Ø < 10") REPLACEMENT EXEMPT PER MICC 19.10.030. (54) REPLACEMENT TREES REQ'D. REF. ARBORIST REPORT FOR CALC.
	PROPOSED:	(31) ONSITE REPLACEMENT TREES. REF. A0.5 & L-01. (23) REPLACEMENT TREES TO BE OFFSET BY FEE-IN-LIEU OR OFFSITE PLANTING PER CITY ARBORIST.

GENERAL PLAN NOTES

A. DO NOT SCALE DRAWINGS. USE DIMS GIVEN.
B. ALL DIMENSIONS ARE TO FACE OF FRAMING, MASONRY, CONCRETE OR FOUNDATION (U.N.O.).
C. REF. SHEET A0.1 FOR GENERAL ARCH'L NOTES.
D. REF. CIVIL AND LANDSCAPE FOR ADD'L REQ'S.

KEYNOTES

1. (E) TREE TO REMAIN (TYP. OF 35).
2. (E) TREE TO BE REMOVED (TYP. OF 17).
3. LINE OF EAVE (ABOVE).
4. (N) RETAINING WALL (105± SF).
5. (N) CONC DRIVEWAY (985± SF).
6. (N) CONC FRONT PORCH (210± SF).
7. (N) CONC REAR PORCH (432± SF).
8. (N) HEAT PUMP COMPRESSOR PER PLAN.
9. TREE PROTECTION FENCE PER A0.4 AND ARBORIST RECOMMENDATIONS.
10. (E) STAIRS TO REMAIN (36± SF).
11. (E) WALLS TO REMAIN (5± SF).
12. PORTION OF PATIO UNCOVERED BY ROOF, TYP. (7± SF TOTAL).
13. PORTION OF WALKWAY UNCOVERED BY ROOF (6± SF).
14. LINE OF BUILDING PAD PER SUB25-002.
15. (N) UTILITIES PER CIVIL. SHOWN FOR REF. ONLY.
16. PROPOSED GRADING PER CIVIL. SHOWN FOR REF. ONLY.
17. PROPOSED TREE PER L'SCAPE. SHOWN FOR REF. ONLY.

ORIGINAL SHEET SIZE: 24"x 36"

AVG BUILDING ELEVATION CALC.

155.9 * 32.0	=	4988.80
154.1 * 2.0	=	308.20
153.5 * 15.16	=	2327.06
153.2 * 2.0	=	306.40
152.8 * 11.8	=	1803.04
152.4 * 2.0	=	304.80
152.0 * 15.16	=	2304.32
152.2 * 8.0	=	1217.60
152.3 * 10.5	=	1599.15
152.4 * 3.84	=	585.22
152.5 * 1.5	=	228.75
153.0 * 8.16	=	1248.68
153.6 * 1.5	=	230.40
154.6 * 18.12	=	2801.35
156.5 * 10.5	=	1643.25
155.5 * 4.0	=	622.00
155.0 * 42.16	=	6534.80
155.5 * 12.0	=	1866.00
156.0 * 32.0	=	4992.00
156.0 * 28.16	=	4392.96
TOTAL		40,304.60
AVERAGE	=	154.68'

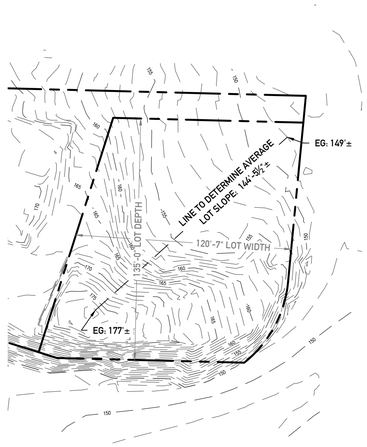

2 A0.3 LOT DIMENSIONS DIAGRAM
SCALE: 1" = 40'

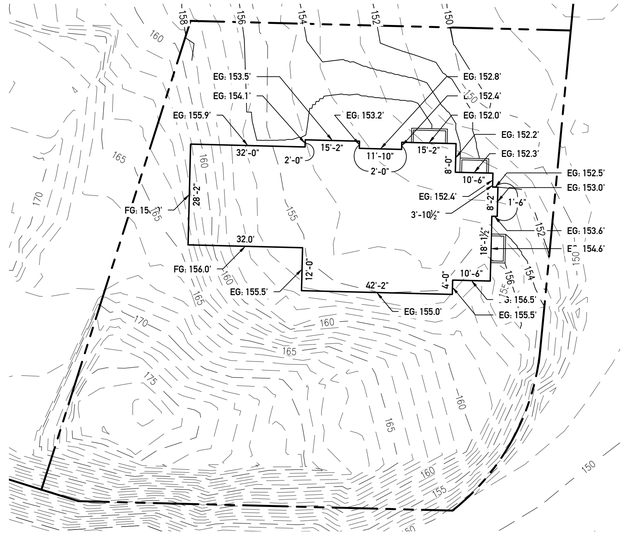

3 A0.3 AVERAGE BUILDING ELEVATION DIAGRAM
SCALE: 1" = 20'

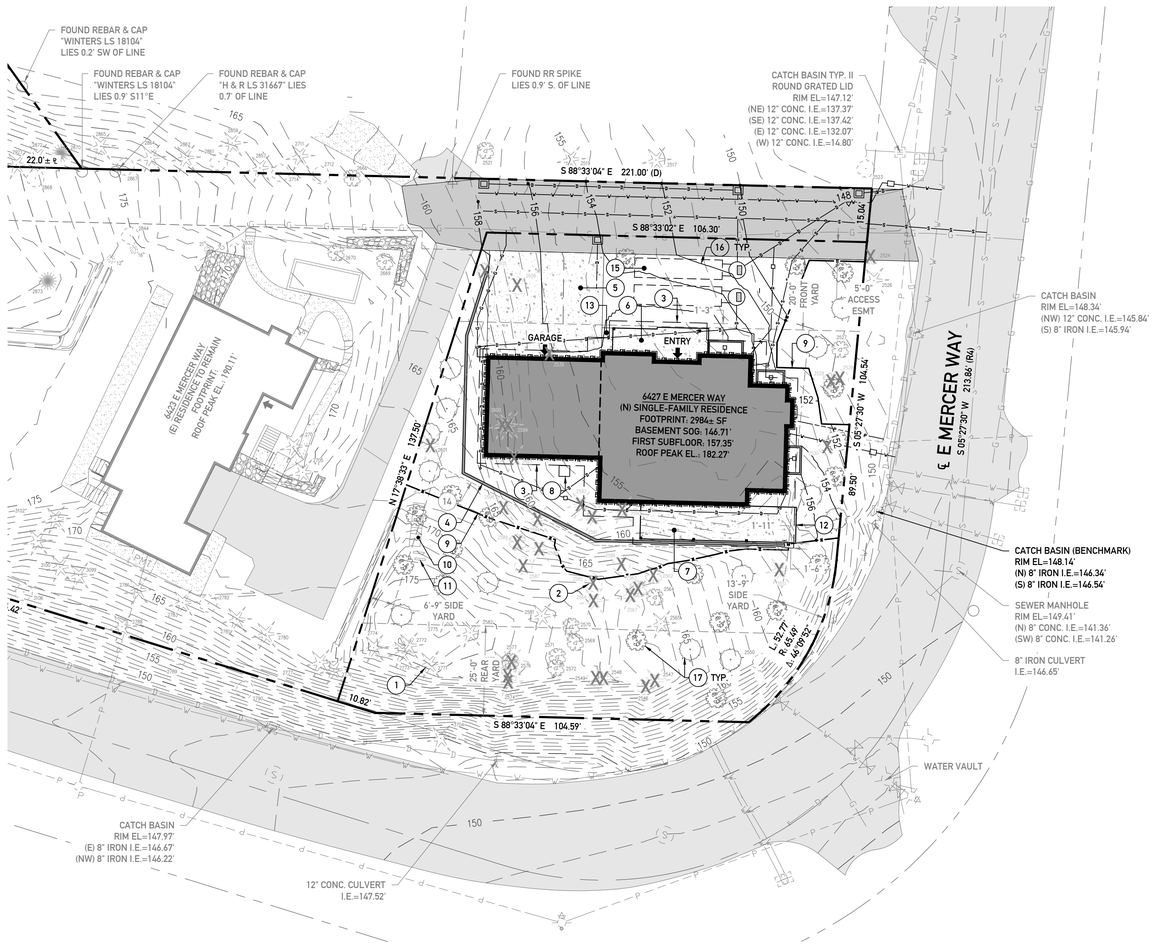

1 A0.3 ZONING SITE PLAN: LOT C
SCALE: 1" = 20'

0 10 20 40
1" = 20'

SCOPE OF WORK

DEVELOP A (N) 2-STORY, 5948± SF SINGLE-FAMILY RESIDENCE WITH 896± SF GARAGE, PER PLANS.

CONSTRUCT SITE IMPROVEMENTS INCLUDING BUT NOT LIMITED TO UTILITY SERVICES, RETAINING WALLS, DRIVEWAY AND PATIOS.

CONCURRENT CRITICAL AREAS REVIEW REQUESTED.

ESTABLISH USE AND OCCUPY, PER PLANS.

PROJECT INFORMATION

SITE ADDRESS

6427 E MERCER WAY
MERCER ISLAND, WA 98040

JURISDICTION

MERCER ISLAND, KING COUNTY, WASHINGTON

PARCEL MAP NUMBER

302405-9151

LEGAL DESCRIPTION

PORTION OF THE NW 1/4 OF THE NE 1/4 OF SECTION 30, TOWNSHIP 24N, RANGE 5E, W.M.

REF. SURVEY FOR COMPLETE LEGAL DESCRIPTION.

LOT SIZE + ZONING

ZONING: R-15
LOT AREA: 16,060.5± SF

BUILDING INFORMATION

OCCUPANCY: R-3
CONSTRUCTION: VB
SPRINKLERS: NFPA 13D THROUGHOUT
ALARMS: NFPA 72 THROUGHOUT

SEPA COMPLIANCE

APPLICABLE SEPA THRESHOLD IS FOUR DWELLING UNITS. THIS PROJECT INCLUDES ONE NEW DWELLING UNIT AND IS CATEGORICALLY EXEMPT.

PROJECT NO.

BUILDING (THIS PERMIT): TBA
CRITICAL AREA REVIEW: TBA

PROJECT DIRECTORY

OWNER + DEVELOPER

JASPAUL GILL
5030 228TH AVENUE SE
ISSAQUAH, WA 98029

ARCHITECT + APPLICANT

CITIZEN DESIGN
3800 WOODLAND PARK AVENUE N #300
SEATTLE, WA 98103
CONTACT: JACOB YOUNG
T. 206.535.7908
E: PERMITS@COLLABORATIVECO.COM

STRUCTURAL ENGINEER

MALSAM TSANG STRUCTURAL ENGINEERING
122 S JACKSON STREET #210
SEATTLE, WA 98104
CONTACT: RUSS FOISY
T. 206.789.6038
E. RUSSF@MALSAM-TSANG.COM

CIVIL ENGINEER

FACET
9706 4TH AVENUE NE #300
SEATTLE, WA 98115
CONTACT: BEN IDDINS
T. 206.523.0024
E. BIDDINS@FACETNW.COM

LANDSCAPE ARCHITECT

CRAMER DESIGN CONSULTANTS
1909 242ND STREET SE
BOTHELL, WA 98021
CONTACT: GAYLE CRAMER
TEL.: 425.261.6258
EMAIL: CDCLSA@FRONTIER.COM

SURVEYOR

INFORMED LAND SURVEY
PO BOX 5137
TACOMA, WA 98415
CONTACT: SHAUN WARREN
T. 253.627.2070
E: ADMIN@I-LANDSURVEY.COM

GEOTECHNICAL ENGINEER

PANGEO
3213 EASTLAKE AVENUE E, STE. B
SEATTLE, WA 98102
CONTACT: JON REHKOPF
T. 206.262.0370
E: JREHKOPF@PANGEOINC.COM

ARBORIST

EARTHDANCE DESIGN
117 E LOUISA STREET #128
SEATTLE, WA 98102
CONTACT: CORINNE HOLLISTER
T. 206.779.3118
E: CORINNE@EARTHDANCEDESIGN.COM

GENERAL CONTRACTOR

PARS WA CONSTRUCTION, INC.
7901 SE 37TH STREET
MERCER ISLAND, WA 98040
LIC. NO.: PARSWWC913DB
CONTACT: MORTEZA ZAHEDI
T: 425.463.9798
E: MRT.ZAHEDI80@GMAIL.COM

CITIZEN DESIGN

NEW CONSTRUCTION
MERCER ISLAND 6427
6427 E MERCER WAY, MERCER ISLAND, WA 98040

City of MERCER ISLAND

PERMIT

June 18, 2025

PERMIT NUMBER

FOR PLANNING DEPT USE ONLY

LOT C
ZONING
SITE PLAN
SCALE: AS NOTED

A0.3

BASEMENT FLOOR AREA CALC.

MICC APPENDIX B: PORTIONS OF BASEMENT BELOW EXISTING OR FINAL GRADE, WHICHEVER IS LOWER, ARE EXCLUDED FROM GROSS FLOOR AREA.

36.50 * 13.16	=	480.34
34.50 * 13.67	=	471.62
36.50 * 13.50	=	492.75
28.67 * 10.50	=	301.04
6.67 * 1.50	=	10.01
3.83 * 40.16	=	153.81
TOTAL		1909.57

ALL PORTIONS OF THE BASEMENT AREA BELOW BOTH EXISTING AND FINAL GRADE (REF. A3.1-A3.4) AND ARE EXCLUDED FROM GROSS FLOOR AREA.

SECOND FLOOR AREA CALC.

ALL PORTIONS OF THIS STORY INCLUDED IN GROSS FLOOR AREA.

41.08 * 14.08	=	578.41
3.79 * 19.83	=	75.16
9.12 * 22.21	=	202.56
41.08 * 14.08	=	578.41
TOTAL		1434.54

FIRST FLOOR AREA CALC.

ALL PORTIONS OF THIS STORY INCLUDED IN GROSS FLOOR AREA.

27.08 * 32.00	=	866.56
41.08 * 14.08	=	578.41
39.08 * 12.92	=	504.92
41.08 * 14.08	=	578.41
29.08 * 10.50	=	350.34
7.08 * 1.50	=	10.62
TOTAL		2889.26

ADDITIONAL AREAS CALC.

THREE-STORY STAIRS COUNT AS TWICE THEIR FLOOR AREA. VAULTED SPACES ABOVE 16 FT TALL COUNT AS TWICE THEIR FLOOR AREA.

STAIRS

13.33 * 3.50	=	46.66
46.66 * 2.00	=	93.32

FIRST FLOOR AREA CALCULATION INCLUDES 46.66 SF OF STAIR AREA. THUS AN ADD'L 46.66 SF IS CHARGEABLE.

VAULTED SPACE ON FIRST/SECOND FLOOR

16.88 * 12.92	=	218.09
218.09 * 2.00	=	436.18

FIRST FLOOR AREA CALCULATION INCLUDES 218.09 SF OF VAULTED SPACE. THUS AN ADD'L 218.09 SF IS CHARGEABLE.

CHARGEABLE TOTAL

46.66 + 218.09	=	264.75

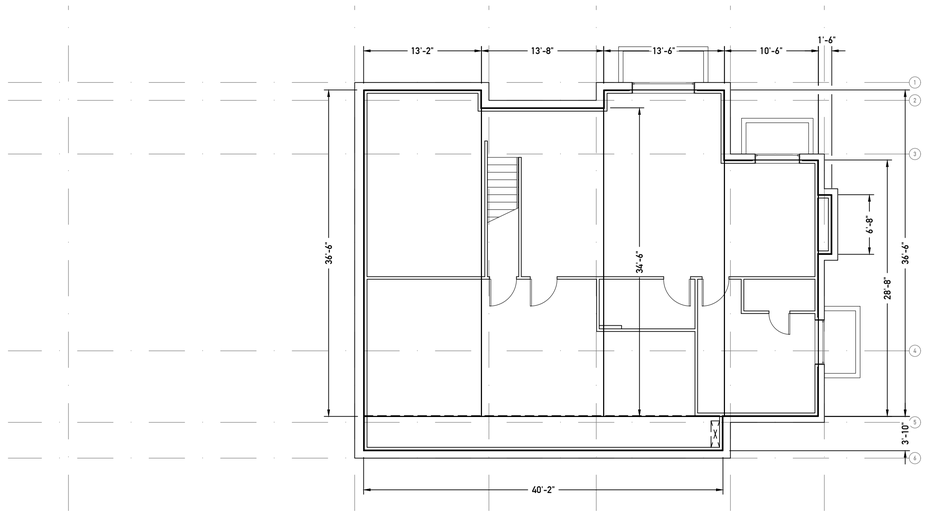

BASEMENT

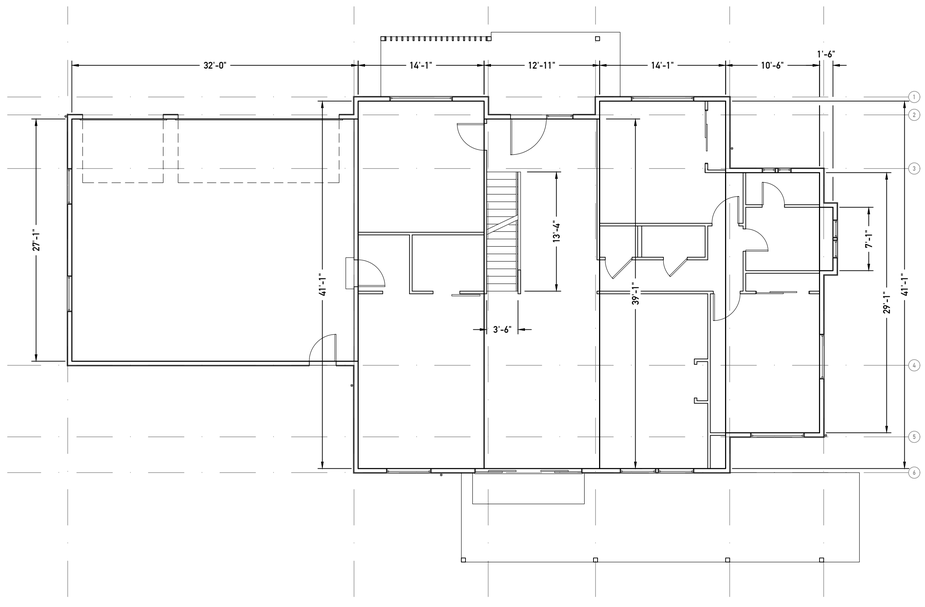

FIRST FLOOR

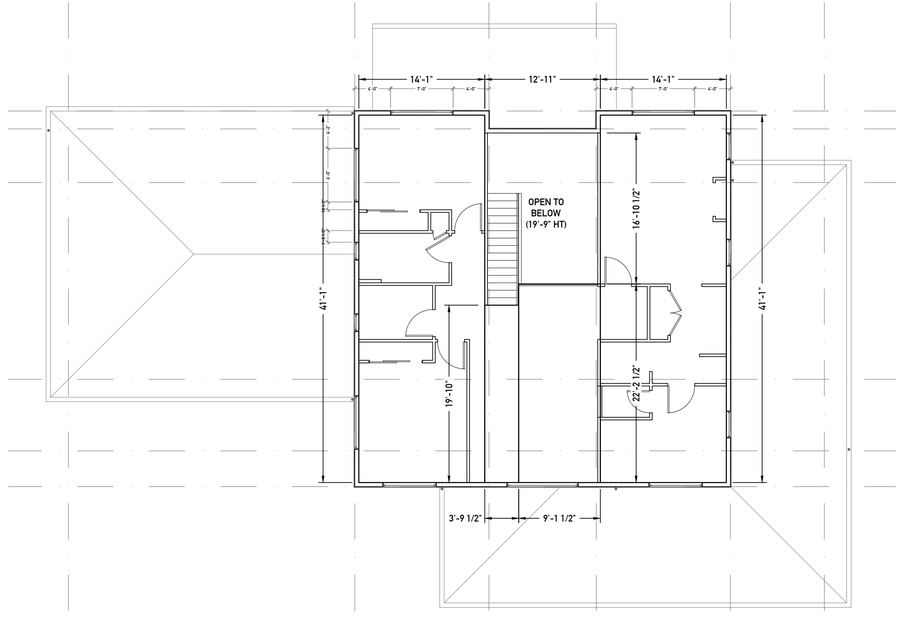

SECOND FLOOR

1 A0.4 FLOOR AREA DIAGRAMS AND CALCULATIONS
SCALE: 1/8" = 1'-0"

N

0 4 8 16
1/8" = 1'-0"

ORIGINAL SHEET SIZE: 24" x 36"

CITIZEN DESIGN

NEW CONSTRUCTION
MERCER ISLAND 6427
6427 E MERCER WAY, MERCER ISLAND, WA 98040

City of MERCER ISLAND
PERMIT
June 18, 2025

PERMIT NUMBER

FOR PLANNING DEPT USE ONLY

LOT C
ZONING
DIAGRAMS
SCALE: AS NOTED

A0.4

EXISTING ONSITE TREE TABLE

MARK	TRUNK Ø	DRIP LINE Ø	SPECIES	VIABILITY	REGULATED CATEGORY	REMOVED?	NOTES
2527	48.5"	21 FT	WESTERN RED CEDAR	Y	EXC	-	
2528	22"	20 FT	WESTERN RED CEDAR	Y	SIG	Y	
2529	24"	25 FT	BIGLEAF MAPLE	Y	SIG	Y	
2530	7"	16 FT	BIGLEAF MAPLE	Y	SML	Y	
2539	-	12 FT	PLUM	-	SML	Y	
2546	11,15,18 (26")	30 FT	BIGLEAF MAPLE	N	HAZ	Y	
2547	28"	20 FT	DOUGLAS FIR	N	HAZ	Y	
2548	29"	22 FT	DOUGLAS FIR	N	HAZ	Y	
2549	19"	18 FT	PACIFIC MADRONE	N	HAZ	Y	
2551	9.2"	12 FT	PACIFIC YEW	Y	EXC	Y	
2562	26.5"	18 FT	WESTERN RED CEDAR	Y	SIG	Y	
2563	20.75"	16 FT	WESTERN RED CEDAR	Y	SIG	Y	
2564	-	-	DOUGLAS FIR	-	SML	-	
2565	14.5"	20 FT	BIGLEAF MAPLE	Y	SIG	-	
2566	25"	18 FT	DOUGLAS FIR	Y	SIG	Y	
2567	25"	18 FT	DOUGLAS FIR	Y	SIG	Y	
2569	7"	8 FT	WESTERN RED CEDAR	Y	SML	-	
2570	7.5"	12 FT	WESTERN RED CEDAR	Y	SML	-	
2571	11.5"	12 FT	WESTERN RED CEDAR	Y	SIG	-	
2572	11.5"	14 FT	WESTERN RED CEDAR	Y	SIG	-	
2574	22"	16 FT	DOUGLAS FIR	N	HAZ	Y	
2575	18"	20 FT	BIGLEAF MAPLE	N	HAZ	Y	
2576	8"	10 FT	DOUGLAS FIR	N	NOT VIABLE	Y	
2577	11"	12 FT	WESTERN RED CEDAR	Y	SIG	-	
2578	21"	18 FT	DOUGLAS FIR	Y	SIG	-	
2581	26"	20 FT	DOUGLAS FIR	Y	SIG	-	
2582	10"	11 FT	DOUGLAS FIR	Y	SIG	-	
2585	9"	10 FT	PACIFIC MADRONE	Y	EXC	Y	COMPROMISED BY REMOVAL OF 2590 & 2591
2586	11"	6 FT	PACIFIC MADRONE	Y	EXC	Y	COMPROMISED BY REMOVAL OF 2590 & 2591
2587	6"	8 FT	PACIFIC MADRONE	Y	EXC	Y	
2588	-	-	DOUGLAS FIR	-	SML	Y	
2589	-	-	DOUGLAS FIR	-	SML	Y	
2590	8.5"	12 FT	DOUGLAS FIR	Y	SML	Y	
2591	16"	16 FT	DOUGLAS FIR	Y	SIG	Y	
2592	-	-	DOUGLAS FIR	-	SML	Y	
2594	11"	14 FT	DOUGLAS FIR	Y	SIG	Y	
2596	16,18 (24")	18 FT	DOUGLAS FIR	Y	SIG	Y	
2597	11"	14 FT	DOUGLAS FIR	Y	SIG	Y	
2599	9"	14 FT	DOUGLAS FIR	Y	SML	Y	
2600	18"	18 FT	DOUGLAS FIR	Y	SIG	Y	
2601	22"	19 FT	BLACK PINE	N	HAZ	Y	
2605	28"	21 FT	WESTERN RED CEDAR	Y	SIG	Y	
2606	21.5"	23 FT	SWEET CHERRY	Y	SIG	Y	
2771	17"	17 FT	DOUGLAS FIR	Y	SIG	-	
2772	21.5"	14 FT	DOUGLAS FIR	Y	SIG	-	
2773	20.75"	20 FT	DOUGLAS FIR	Y	SIG	-	
2774	-	-	DOUGLAS FIR	-	SML	-	
2775	-	-	DOUGLAS FIR	-	SML	-	

PROPOSED TREE TABLE

MARK	SIZE (MIN.)	SPECIES	NOTES
1	1.5"Ø	VINE MAPLE	
2	1.5"Ø	CASCARA	
3	1.5"Ø	VINE MAPLE	
4	6' HT	WESTERN RED CEDAR	
5	6' HT	ALPINE FIR	
6	1.5"Ø	CASCARA	
7	1.5"Ø	VINE MAPLE	
8	1.5"Ø	VINE MAPLE	
9	6' HT	ALPINE FIR	
10	6' HT	WESTERN RED CEDAR	
11	1.5"Ø	VINE MAPLE	
12	1.5"Ø	CASCARA	
13	6' HT	WESTERN RED CEDAR	
14	1.5"Ø	VINE MAPLE	
15	1.5"Ø	VINE MAPLE	
16	6' HT	WESTERN RED CEDAR	
17	6' HT	WESTERN RED CEDAR	
18	1.5"Ø	CASCARA	
19	1.5"Ø	VINE MAPLE	
20	6' HT	WESTERN RED CEDAR	
21	1.5"Ø	VINE MAPLE	
22	1.5"Ø	CASCARA	
23	1.5"Ø	VINE MAPLE	
24	6' HT	WESTERN RED CEDAR	
25	1.5"Ø	VINE MAPLE	
26	1.5"Ø	VINE MAPLE	
27	1.5"Ø	VINE MAPLE	
28	6' HT	ALPINE FIR	
29	6' HT	ALPINE FIR	
30	6' HT	ALPINE FIR	
31	6' HT	ALPINE FIR	

EXISTING OFFSITE TREE TABLE

MARK	TRUNK Ø	DRIP LINE Ø	SPECIES	VIABILITY	REGULATED CATEGORY	REMOVED?	NOTES
2517	23"	16 FT	DOUGLAS FIR	Y	SIG	-	
2519	24.5"	22 FT	DOUGLAS FIR	Y	SIG	-	
2521	34"	22 FT	DOUGLAS FIR	Y	EXC	-	
2523	11,11 (16")	10 FT	DOUGLAS FIR	Y	SIG	-	
2524	7.5,19 (20")	21 FT	DOUGLAS FIR	Y	SIG	Y	CONFLICTS WITH REQUIRED PRIVATE ROAD
2526	-	-	DOUGLAS FIR	Y	SML	-	
3704	11"	12 FT	DOUGLAS FIR	Y	SIG	-	

LEGEND

- EXISTING DECIDUOUS TREE (NON-EXCEPTIONAL)
- EXISTING EVERGREEN TREE (NON-EXCEPTIONAL)
- EXISTING EXCEPTIONAL TREE (24"Ø OR LARGER)
- EXISTING EXCEPTIONAL TREE (LESS THAN 24"Ø)
- PROPOSED DECIDUOUS TREE PER L-01
- PROPOSED EVERGREEN TREE PER L-01

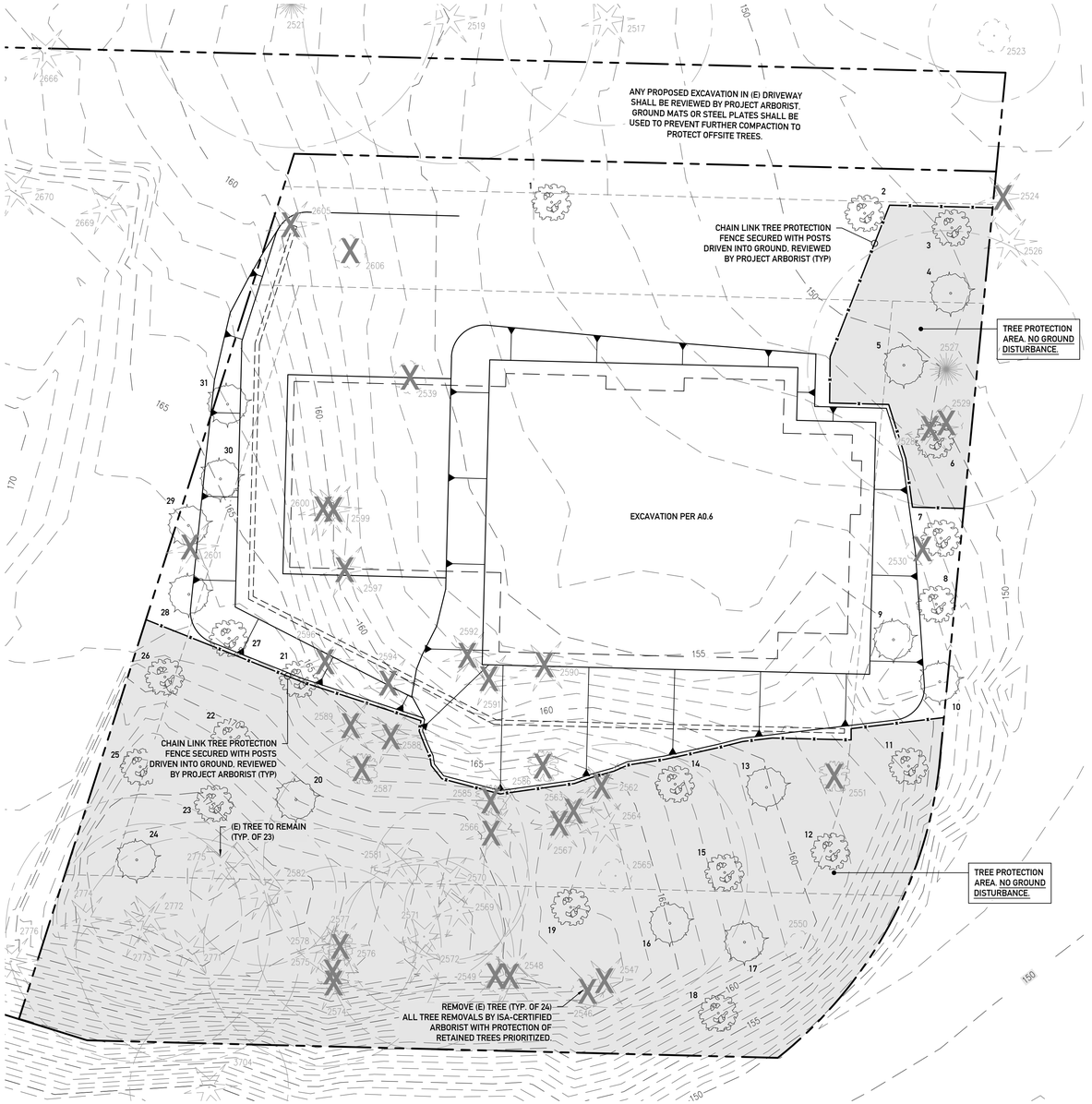

1 A0.5 TREE PLAN
SCALE: 1" = 10'

ORIGINAL SHEET SIZE: 24"x 36"

CITIZEN DESIGN

NEW CONSTRUCTION
MERCER ISLAND 6427
6427 E MERCER WAY, MERCER ISLAND, WA 98040

City of MERCER ISLAND
PERMIT
June 18, 2025

PERMIT NUMBER

FOR PLANNING DEPT USE ONLY

LOT C
TREE PLAN
SCALE: AS NOTED

A0.5

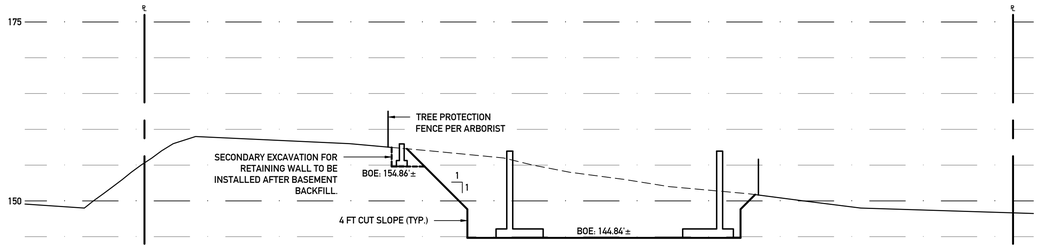

1 A0.6 **EXCAVATION SECTION**
SCALE: 1" = 10'

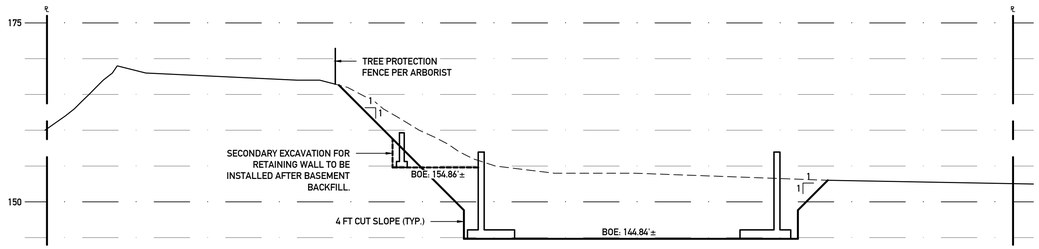

2 A0.6 **EXCAVATION SECTION**
SCALE: 1" = 10'

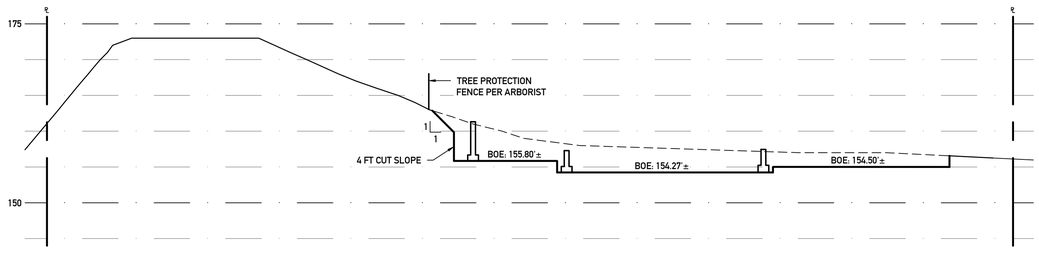

3 A0.6 **EXCAVATION SECTION**
SCALE: 1" = 10'

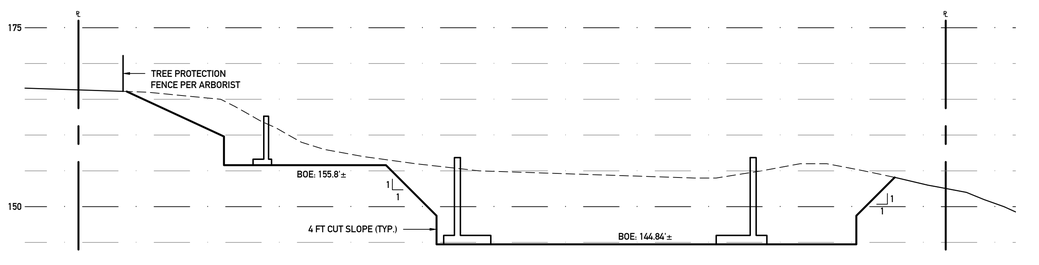

4 A0.6 **EXCAVATION SECTION**
SCALE: 1" = 10'

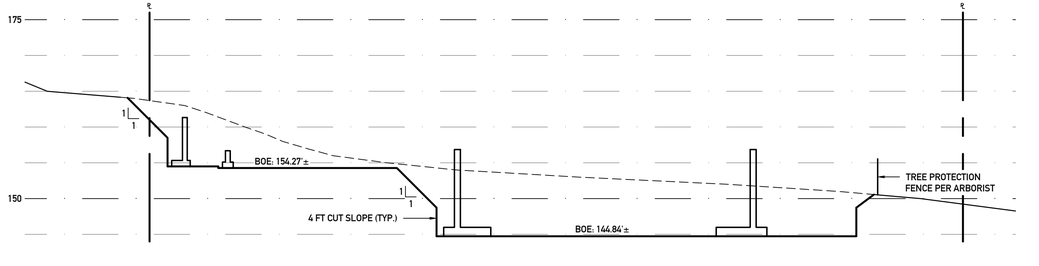

5 A0.6 **EXCAVATION SECTION**
SCALE: 1" = 10'

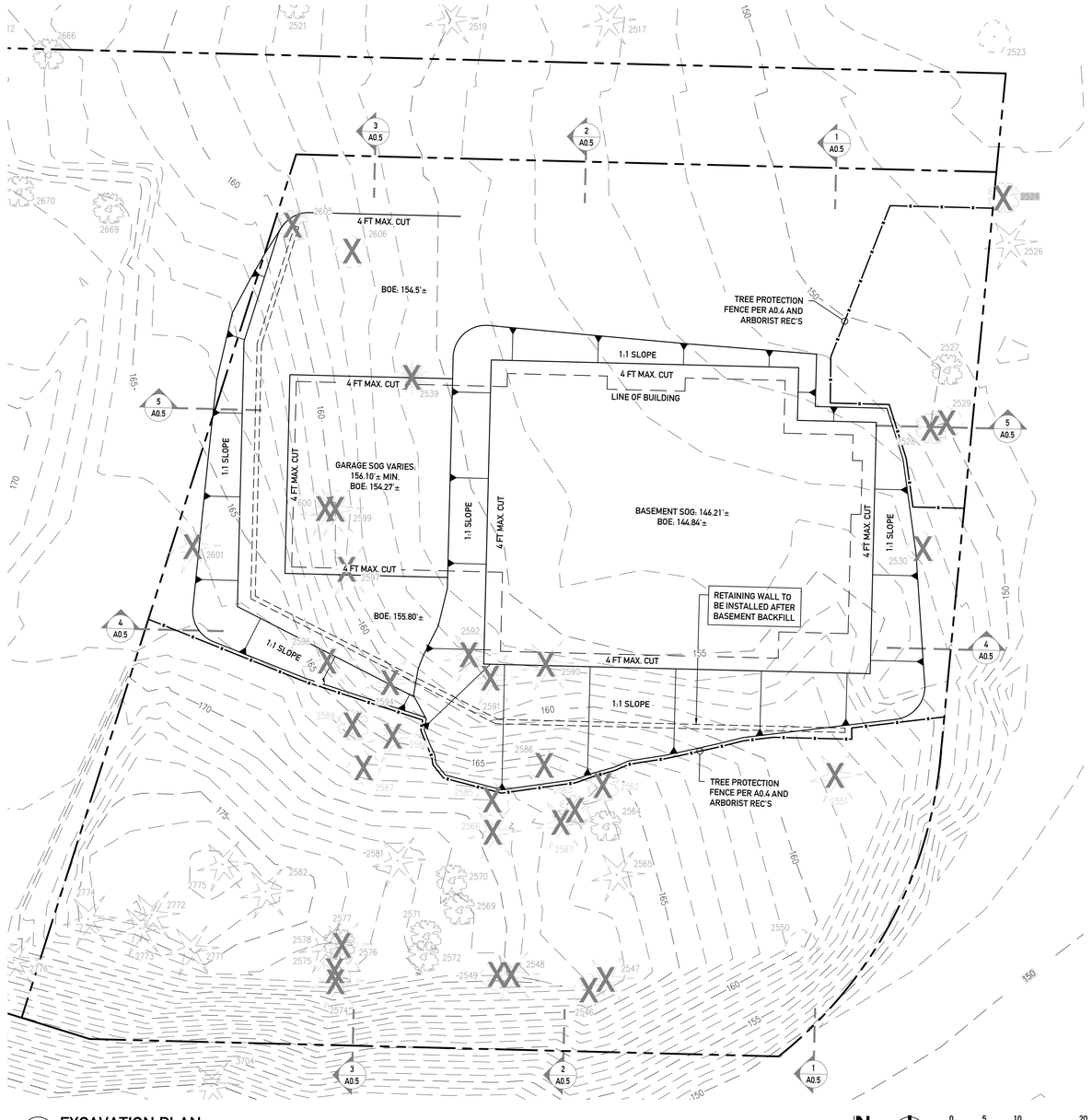

6 A0.6 **EXCAVATION PLAN**
SCALE: 1" = 10'

CITIZEN DESIGN

NEW CONSTRUCTION
MERCER ISLAND 6427
6427 E MERCER WAY. MERCER ISLAND. WA 98040

City of MERCER ISLAND
PERMIT
June 18, 2025

PERMIT NUMBER

FOR PLANNING DEPT USE ONLY

LOT C
EXCAVATION PLAN
AND SECTIONS
SCALE: AS NOTED

A0.6

ORIGINAL SHEET SIZE: 24"x 36"

TOPOGRAPHIC SURVEY

SURVEYOR'S NOTES

1. THE PURPOSE OF THIS SURVEY IS TO DETERMINE THE LOCATION OF THE BOUNDARIES AND PROVIDE TOPOGRAPHIC INFORMATION OF THE PARCELS AS DESCRIBED HEREON.

2. THIS SURVEY WAS MADE BY FIELD TRAVERSE USING A LEICA 1203 3" ROBOTIC TOTAL STATION AND GS14RTK GPS WITH RESULTING CLOSURES EXCEEDING THE MINIMUM ACCURACY STANDARDS AS SET FORTH BY WAC 332–130.

3. THE BOUNDARY CORNERS AND LINES DEPICTED ON THIS MAP REPRESENT DEED LINES ONLY. THEY DO NOT PURPORT TO SHOW OWNERSHIP LINES THAT MAY OTHERWISE BE DETERMINED BY A COURT OF LAW.

4. THE LEGAL DESCRIPTION AND SPECIAL EXCEPTIONS FOR APN 3024059151, APN 3024059043 AND APN 3024059001 AS SHOWN HEREON ARE PER TITLE REPORT PROVIDED BY FIDELITY NATIONAL TITLE INSURANCE COMPANY COMMITMENT NUMBER 611203264 DATED FEBRUARY 1, 2019 AT 8:00AM. THE LEGAL DESCRIPTION AND SPECIAL EXCEPTIONS FOR APN 3024059213 AS SHOWN HEREON IS PER TITLE REPORT PROVIDED BY FIDELITY NATION TITLE INSURANCE COMPANY, COMMITMENT NUMBER 611199453, DATED NOVEMBER 20, 2018 AT 8:00 AM

5. FIELD WORK FOR THIS PROJECT WAS PERFORMED IN MARCH, 2019, JULY, 2020, OCTOBER AND NOVEMBER, 2024 AND IS THEREFORE A REFLECTION OF THE CONDITIONS AT THAT TIME. ALL MONUMENTS WERE VISITED OR SET IN MARCH & APRIL, 2019. THIS SITE CONTAINS IMPROVEMENTS NOT LOCATED OR SHOWN AS A PART OF THIS SURVEY.

HORIZONTAL DATUM

NAD 1983(2011); PER RTK GPS TIES AND THE WASHINGTON STATE REFERENCE NETWORK (WSRN). UNITS OF MEASUREMENT ARE U.S. SURVEY FEET.

VERTICAL DATUM

NAVD 1988; PER RTK GPS TIES AND THE WASHINGTON STATE REFERENCE NETWORK (WSRN). UNITS OF MEASUREMENT ARE U.S. SURVEY FEET.

CONTOUR INTERVAL=1 FEET.
CONTOURS DERIVED FROM DIRECT FIELD OBSERVATION.
CONTOURS FOLLOW NATIONAL MAPPING STANDARDS, ONE-HALF CONTOUR INTERVAL.

REFERENCE SURVEYS

R1) MERCER ISLAND SHORT PLAT NO. MI–82–09–18, RECORDING NO. 198410179003
R2) RECORD OF SURVEY, RECORDING NO. 20150917900016
R3) RECORD OF SURVEY, RECORDING NO. 199804279007
R4) RECORD OF SURVEY, RECORDING NO. 20070720900011
R5) RECORD OF SURVEY, RECORDING NO. 199901069001
R6) LOT LINE REVISION, RECORDING NO. 199811189006
R7) RECORD OF SURVEY, RECORDING NO. 20111213900001
R8) RECORD OF SURVEY, RECORDING NO. 20030708900008
R9) RECORD OF SURVEY, RECORDING NO. 20170526900002

RECORDS OF KING COUNTY RECORDER'S OFFICE

LEGAL DESCRIPTIONS

PARCEL "A" (APN 3024059001):

THAT PORTION OF THE NORTH 150 FEET OF THE NORTHWEST QUARTER OF THE NORTHEAST QUARTER OF SECTION 30, TOWNSHIP 24 NORTH, RANGE 5 EAST, W.M. IN KING COUNTY WASHINGTON, LYING WESTERLY OF EAST MERCER WAY AND LYING EASTERLY OF A LINE DESCRIBED AS FOLLOWS:

BEGINNING AT A POINT ON THE NORTH LINE OF SECTION 30, TOWNSHIP 24 NORTH, RANGE 5 EAST, W.M., IN KING COUNTY, WASHINGTON, WHICH BEARS SOUTH 88 DEGREES 33'02" EAST 550.23 FEET, FROM THE NORTH QUARTER OF SAID SECTION 30; THENCE SOUTH 1 DEGREE 28'29" WEST 150 FEET TO THE SOUTH LINE OF THE NORTH 150 FEET OF SAID NORTHWEST QUARTER OF THE NORTHEAST QUARTER AND THE TERMINUS OF SAID LINE, KNOWN AS THE ORIGINAL PARCEL. WHICH PORTION LIES WESTERLY OF A LINE DRAWN FROM A POINT ON THE NORTH LINE OF THE ORIGINAL PARCEL WHICH POINT LIES 342.98 FEET WEST OF THE WEST LINE OF EAST MERCER WAY AND A POINT ON THE SOUTH LINE OF THE ORIGINAL PARCEL WHICH LINE LIES 221 FEET WEST OF THE WEST LINE OF EAST MERCER WAY.

TOGETHER WITH A NONEXCLUSIVE EASEMENT FOR ROAD AND UTILITIES OVER AND ACROSS THE SOUTH 25 FEET OF THE FOLLOWING DESCRIBED TRACT: THAT PORTION OF THE NORTHWEST QUARTER OF THE NORTHEAST QUARTER OF SECTION 30, TOWNSHIP 24, NORTH, RANGE 5, EAST, W.M., IN KING COUNTY, WASHINGTON, DESCRIBED AS FOLLOWS:

BEGINNING AT THE INTERSECTION OF THE NORTH LINE OF SAID SUBDIVISION WITH THE WESTERLY MARGIN OF EAST MERCER WAY; THENCE NORTH 88 DEGREES 33'02" WEST 117.98 FEET TO TRUE POINT BEGINNING OF THIS DESCRIPTION; THENCE SOUTH 88 DEGREES 33'02" EAST 117.98 FEET; THENCE SOUTHERLY ALONG SAID WESTERLY MARGIN OF EAST MERCER WAY TO THE SOUTH LINE OF THE NORTH 150 OF SAID SUBDIVISION; THENCE NORTH 88 DEGREES 33'02" WEST ALONG SAID SOUTH LINE 118 FEET; THENCE NORTHERLY TO THE TRUE POINT OF BEGINNING;

TOGETHER WITH A NONEXCLUSIVE EASEMENT FOR ROAD AND UTILITIES OVER AND ACROSS THE SOUTH 30 FEET OF THE FOLLOWING DESCRIBED TRACT:

THAT PORTION OF THE NORTH 150 FEET OF THE NORTHWEST QUARTER OF THE NORTHEAST QUARTER OF SECTION 30, T.24N, R5EWM, IN KING COUNTY WASHINGTON, LYING WESTERLY OF EAST MERCER WAY AND LYING EASTERLY OF A LINE DESCRIBED AS FOLLOWS:

BEGINNING AT A POINT ON THE NORTH LINE OF SECTION 30, T24N, R5E WM, IN KING COUNTY, WASHINGTON, WHICH BEARS SOUTH 88 DEGREES 33'02" EAST 550.23 FEET FROM THE NORTH QUARTER CORNER OF SAID SECTION 30; THENCE SOUTH 1 DEGREE 28'29" WEST 150 FEET TO THE SOUTH LINE OF THE NORTH 150 FEET OF SAID NORTHWEST QUARTER OF THE NORTHEAST QUARTER AND THE TERMINUS OF SAID LINE, KNOWN AS THE ORIGINAL PARCEL. WHICH PORTION LIES WESTERLY OF A LINE DRAWN FROM A POINT ON THE NORTH LINE OF THE ABOVE–DESCRIBED PROPERTY WHICH LIES 117.98 FEET WEST OF THE WEST LINE OF EAST MERCER WAY TO A POINT ON THE SOUTH LINE OF THE ORIGINAL PARCEL WHICH POINT LIES 118 FEET WEST OF THE WEST LINE OF EAST MERCER WAY. SAID LOT 2 TO BE BOUNDED ON THE WEST BY A LINE DRAWN FROM A POINT ON THE NORTH LINE OF THE ORIGINAL PARCEL, WHICH POINT LIES 342.98 FEET WEST OF THE WEST LINE OF EAST MERCER WAY AND A POINT ON THE SOUTH LINE OF THE ORIGINAL PARCEL WHICH LIES 221 FEET WEST OF THE WEST LINE OF EAST MERCER WAY.

SUBJECT TO: RESERVATIONS, RESTRICTIONS, COVENANTS AND EASEMENTS OF RECORD.

PARCEL "B" (APN 3024059151):

THAT PORTION OF THE NORTHWEST QUARTER OF THE NORTHEAST QUARTER OF SECTION 30, TOWNSHIP 24 NORTH, RANGE 5 EAST, W.M., IN KING COUNTY, WASHINGTON, DESCRIBED AS FOLLOWS:

COMMENCING AT A POINT ON THE NORTH LINE OF SAID SECTION 30 WHICH BEARS SOUTH 88 DEGREES 33'02" EAST 550.23 FEET FROM THE NORTH QUARTER CORNER OF SAID SECTION 30; THENCE SOUTH 1 DEGREE 28'29" WEST 150 FEET TO THE SOUTH LINE OF THE NORTH 150 FEET OF SAID SECTION 30; THENCE SOUTH 88 DEGREES 33'02" EAST ALONG SAID SOUTH LINE OF THE NORTH 150 FEET FOR A DISTANCE OF 374.02 FEET TO THE TRUE POINT OF THE BEGINNING; THENCE CONTINUING SOUTH 88 DEGREES 33'02" EAST 103.06 FEET TO THE WESTERLY MARGIN OF EAST MERCER WAY; THENCE SOUTHERLY ALONG SAID WESTERLY MARGIN TO AN INTERSECTION WITH THE SOUTH LINE OF THE NORTH 300 FEET OF SAID SECTION 30; THENCE NORTH 88 DEGREES 33'02" WEST ALONG SAID SOUTH LINE OF THE NORTH 300 FEET TO AN INTERSECTION WITH THE NORTHERLY MARGIN OF EAST MERCER WAY; THENCE WESTERLY ALONG SAID NORTHERLY MARGIN OF EAST MERCER WAY TO A POINT FROM WHICH THE TRUE POINT OF BEGINNING BEARS NORTH 17 DEGREES 17'39" EAST, THENCE NORTH 17 DEGREES 17'39" EAST 153.12 FEET TO THE TRUE POINT OF BEGINNING.

EXCEPT THE NORTHERLY 15 FEET THEREOF AS MEASURED AT RIGHT ANGLES TO THE NORTHERLY LINE THEREOF.

PARCEL "C" (APN 3024059043):

THAT PORTION OF THE NORTHWEST QUARTER OF THE NORTHEAST QUARTER OF SECTION 30, TOWNSHIP 24 NORTH, RANGE 5 EAST, W.M., IN KING COUNTY, DESCRIBED AS FOLLOWS:

BEGINNING AT A POINT ON THE NORTH LINE OF SAID SECTION 30 WHICH BEARS SOUTH 88 DEGREES 33 MINUTES 02 SECONDS EAST 550, 23 FEET FROM THE NORTH QUARTER CORNER OF SAID SECTION 30;

THENCE SOUTH 01 DEGREES 28 MINUTES 29 SECONDS WEST 150 FEET TO THE SOUTH LINE OF THE NORTH 150 FEET OF SAID SECTION 30 TO THE TRUE POINT OF BEGINNING; THENCE SOUTH 88 DEGREES 33 MINUTES 02 SECONDS EAST ALONG SAID SOUTH LINE OF THE NORTH 150 FEET FOR A DISTANCE OF 477.08 FEET TO THE WESTERLY MARGIN OF EAST MERCER WAY; THENCE SOUTHERLY ALONG SAID WESTERLY MARGIN TO AN INTERSECTION WITH THE SOUTH LINE OF THE NORTH 300 FEET OF SAID SECTION 30; THENCE NORTH 88 DEGREES 33 MINUTES 02 SECONDS WEST ALONG SAID SOUTH MARGIN OF EAST MERCER WAY; THENCE WESTERLY ALONG SAID NORTHERLY MARGIN OF EAST MERCER WAY TO A POINT FROM WHICH THE TRUE POINT OF BEGINNING BEARS NORTH 27 DEGREES 39 MINUTES 33 SECONDS EAST 31 FEET DISTANT; THENCE NORTH 17 DEGREES 38 MINUTES 33 SECONDS EAST 31 FEET TO THE TRUE POINT OF BEGINNING.

EXCEPT THAT PORTION DESCRIBED AS FOLLOWS:

THAT PORTION OF THE NORTHWEST QUARTER OF THE NORTHEAST QUARTER OF SECTION 30, TOWNSHIP 24 NORTH, RANGE 5 EAST, W.M., IN KING COUNTY, DESCRIBED AS FOLLOWS:

BEGINNING AT A POINT ON THE NORTH LINE OF SAID SECTION 30 WHICH BEARS SOUTH 88 DEGREES 33 MINUTES 02 SECONDS EAST 550.23 FEET FROM THE NORTH QUARTER CORNER OF SAID SECTION 30; THENCE SOUTH 01 DEGREE 28 MINUTES 29 SECONDS WEST 150 FEET TO THE SOUTH LINE OF THE NORTH 150 FEET OF SAID SECTION 30; THENCE SOUTH 88 DEGREES 33 MINUTES 02 SECONDS EAST ALONG SAID SOUTH LINE OF THE NORTH 150 FEET FOR A DISTANCE OF 374.02 FEET TO THE TRUE POINT OF BEGINNING; THENCE CONTINUING SOUTH 86 DEGREES 33 MINUTES 02 SECONDS EAST 103.06 FEET TO THE WESTERLY MARGIN OF EAST MERCER WAY; THENCE SOUTHERLY ALONG SAID WESTERLY MARGIN TO AN INTERSECTION WITH THE SOUTH LINE OF THE NORTH 300 FEET OF SAID SECTION 30; THENCE NORTH 88 DEGREES 33 MINUTES 02 SECONDS WEST ALONG SAID SOUTH LINE OF THE NORTH 300 FEET TO AN INTERSECTION WITH THE NORTHERLY MARGIN OF EAST MERCER WAY; THENCE WESTERLY ALONG SAID NORTHERLY MARGIN OF EAST MERCER WAY TO A POINT FROM WHICH THE TRUE POINT OF BEGINNING BEARS NORTH 17 DEGREES 17 MINUTES 39 SECONDS EAST; THENCE NORTH 17 DEGREES 17 MINUTES 39 SECONDS EAST 153.12 FEET TO THE TRUE POINT OF BEGINNING;

EXCEPT THE NORTHERLY 15 FEET THEREOF AS MEASURED AT RIGHT ANGLES TO THE NORTHERLY LINE THEREOF.

SITUATED IN THE CITY OF MERCER ISLAND, COUNTY OF KING, STATE OF WASHINGTON.

APN 3024059213:

LOT 7 OF MERCER ISLAND SHORT PLAT NO. 82–09–18, RECORDING NO. 8410179003SD, RECORDS OF KING COUNTY, WASHINGTON.

TOGETHER WITH AN EASEMENT FOR INGRESS AND EGRESS RECORDED UNDER RECORDING NO. 8311070717 AND DELINEATED ON SAID SHORT PLAT.

SITUATE IN THE COUNTY OF KING, STATE OF WASHINGTON.

SURVEYOR'S NOTES

(PER TITLE REPORT PROVIDED BY FIDELITY NATIONAL TITLE INSURANCE COMPANY COMMITMENT NUMBER 611203264 DATED FEBRUARY 1, 2019 AT 8:00AM)

1. RIGHT TO USE WATER FROM A STREAM ON THE GRANTED PREMISES FOR DOMESTIC PURPOSES, AND THE RIGHT TO LAY DOWN, CONSTRUCT AND MAINTAIN WATER PIPELINES FROM SAID STREAM, AS RECORDED UNDER RECORDING NUMBER 2751063.

   SURVEYOR'S NOTE: THIS EXCEPTION AFFECTS THE PROPERTY BUT IS NOT ABLE TO BE PLOTTED ON THE SURVEY.

2. EASEMENT(S) FOR THE PURPOSE(S) SHOWN BELOW AND RIGHTS INCIDENTAL THERETO, AS GRANTED IN A DOCUMENT:

   GRANTED TO: PUGET SOUND POWER AND LIGHT COMPANY
   PURPOSE: ELECTRIC TRANSMISSION AND/OR DISTRUBUTION LINE, TOGETHER WITH NECESSARY APPURTENANCES
   RECORDING DATE: JUNE 15, 1960
   RECORDING NO.: 5171783
   AFFECTS: THE LEGAL IS NOT SUFFICIENT TO DETERMINE IT'S EXACT LOCATION. AS STAKED.

3. EASEMENT(S) FOR THE PURPOSE(S) SHOWN BELOW AND RIGHTS INCIDENTAL THERETO, AS GRANTED IN A DOCUMENT:

   GRANTED TO: MERCER ISLAND SEWER DISTRICT, KING COUNTY, WASHINGTON, A MUNICIPAL CORP
   PURPOSE: SEWER PIPE LINE AND LINES
   RECORDING DATE: SEPTEMBER 17, 1964
   RECORDING NO.: 5787752
   AFFECTS: PORTION OF HEREIN PROPERTY.

4. EASEMENT(S) FOR THE PURPOSE(S) SHOWN BELOW AND RIGHTS INCIDENTAL THERETO, AS GRANTED IN A DOCUMENT:

   GRANTED TO: GORDON W. MCCUTCHEON AND MAJORIE T. MCCUTCHEON, HIS WIFE, MICHAEL J. SWOFFORD AND LINDA ANNE SWOFFARD, HIS WIFE, THOMAS G DAVIDSON AND SARMA P DAVIDSON, HIS WIFE, WILLIAM H. RUBIDGE, A SINGLE MAN AND DANIEL J CUMMINS AND CLEO AN CUMMINS, HIS WIFE, TENANTS IN COMMON
   PURPOSE: NON–EXCLUSIVE EASEMENT FOR INGRESS, EGRESS AND UTILITES
   RECORDING DATE: AUGUST 23, 1974
   RECORDING NO.: 7408230442
   AFFECTS: A PORTION OF PARCEL C

5. PERTAINS TO TERMS AND CONDITIONS OF NOTICE OF CHARGES BY WATER, SEWER AND/OR STORM AND SURFACE WATER UTILITIES. THIS EXCEPTION AFFECTS THE PROPERTY BUT IS NOT ABLE TO BE PLOTTED ON THE SURVEY.

6. EASEMENT(S) FOR THE PURPOSE(S) SHOWN BELOW AND RIGHTS INCIDENTAL THERETO, AS GRANTED IN A DOCUMENT:

   GRANTED TO: WASHINGTON NATURAL GAS COMPANY
   PURPOSE: GAS PIPELINE OF PIPELINES
   RECORDING DATE: JUNE 10, 1986
   RECORDING NO.: 9606101228
   AFFECTS: NORTHERLY 15 FEET OF PARCEL C

7. ITEMS SET FOR ON A SURVEY RECORDING NUMBER 20111213900001. THIS EXCEPTION AFFECTS THE PROPERTY BUT IS NOT ABLE TO BE PLOTTED ON THE SURVEY.

8–20 THESE EXCEPTION ITEMS ARE NOT SURVEY MATTERS AND ARE NOT ABLE TO BE PLOTTED ON THE SURVEY.

(PER TITLE REPORT PROVIDED BY FIDELITY NATION TITLE INSURANCE COMPANY, COMMITMENT NUMBER 611199453, DATED NOVEMBER 20, 2018 AT 8:00 AM)

1A. EASEMENT(S) FOR THE PURPOSE(S) SHOWN BELOW AND RIGHTS INCIDENTAL THERETO, AS GRANTED IN A DOCUMENT:
   PURPOSE: WATER LINE
   RECORDING DATE: AUGUST 3, 1915
   RECORDING NO.: 1010741
   AFFECTS: THE DESCRIPTION CONTAINED IN THE ABOVE INSTRUMENT IS NOT SUFFICIENT TO DETERMINE ITS EXACT LOCATION WITHIN THE PROPERTY HEREIN DESCRIBED.
   SURVEYOR'S NOTE: THE NORTHERLY PORTION OF LOT 7 IS SUBJECT TO AN EASEMENT OF UNDEFINED WIDTH FOR MAINTENANCE OF A WATER PIPE LINE AS LAID OUT AND ESTABLISHED ON JUNE 16, 1915.

2A. RELEASE OF DAMAGE AGREEMENT, INCLUDING THE TERMS AND PROVISIONS THEREOF;
   EXECUTED BY: MERCER ISLAND DEVELOPMENT, INC. AND KING COUNTY
   RECORDING DATE: AUGUST 5, 1959
   RECORDING NO.: 5064645
   RELEASING KING COUNTY FROM ALL FUTURE CLAIMS FROM THE NATURAL DRAINAGE FLOW FROM THE PLAT OF TIMBERLAND NUMBER 4.

3A. EASEMENT(S) FOR THE PURPOSE(S) SHOWN BELOW AND RIGHTS INCIDENTAL THERETO, AS GRANTED IN A DOCUMENT:
   GRANTED TO: MERCER ISLAND SEWER DISTRICT
   PURPOSE: SEWER PIPELINE
   RECORDING DATE: SEPTEMBER 19, 1964
   RECORDING NO.: 5787752
   AFFECTS: SOUTHERLY PORTION OF SAID PREMISES

4A. EASEMENT(S) FOR THE PURPOSE(S) SHOWN BELOW AND RIGHTS INCIDENTAL THERETO, AS GRANTED IN A DOCUMENT:
   PURPOSE: SEWER AND STORM DRAINAGE
   RECORDING DATE: AUGUST 5, 1974
   RECORDING NO.: 7408050451
   AFFECTS: WESTERLY 10 FEET OF SAID PREMISES

5A. EASEMENT(S) FOR THE PURPOSE(S) SHOWN BELOW AND RIGHTS INCIDENTAL THERETO, AS GRANTED IN A DOCUMENT:
   RECORDING DATE: NOVEMBER 7, 1983
   RECORDING NO.: 8311070717
   SAID EASEMENT CONTAINS A COVENANT TO BEAR EQUAL SHARE OF COST OF CONSTRUCTION, MAINTENANCE OR REPAIR OF SAID EASEMENT.

6A. COVENANTS, CONDITIONS, RESTRICTIONS, RECITALS, RESERVATIONS, EASEMENTS, EASEMENT PROVISIONS, DEDICATIONS, BUILDING SETBACK LINES, NOTES AND STATEMENTS, IF ANY, BUT OMITTING ANY COVENANTS OR RESTRICTIONS, IF ANY, INCLUDING BUT NOT LIMITED TO THOSE BASED UPON RACE, COLOR, RELIGION, SEX, SEXUAL ORIENTATION, FAMILIAL STATUS, MARITAL STATUS, DISABILITY, HANDICAP, NATIONAL ORIGIN, ANCESTRY, OR SOURCE OF INCOME, AS SET FORTH IN APPLICABLE STATE OR FEDERAL LAWS, EXCEPT TO THE EXTENT THAT SAID COVENANT OR RESTRICTION IS PERMITTED BY APPLICABLE LAW, AS SET FORTH ON MERCER ISLAND SHORT PLAT NO. MI 82–09–18:

   RECORDING NO: 8410179003

   TERMINATION OF UTILITY AND STORM DRAIN EASEMENT FROM SAID SHORT PLAT RECORDED UNDER RECORDING NO. 20050627000601.

7A. EASEMENT(S) FOR THE PURPOSE(S) SHOWN BELOW AND RIGHTS INCIDENTAL THERETO, AS GRANTED IN A DOCUMENT:
   GRANTED TO: CITY OF MERCER ISLAND
   PURPOSE: PEDESTRIAN TRAIL
   RECORDING DATE: APRIL 24, 2003
   RECORDING NO.: 20030424001903
   AFFECTS: PORTION OF SAID PREMISES AND OTHER PROPERTY
   SURVEYORS NOTE: SAID DOCUMENT CONTAINS INSUFFICIENT INFORMATION TO DETERMINE EASEMENT LOCATION. NOT SHOWN ON SURVEY.

8A. EASEMENT(S) FOR THE PURPOSE(S) SHOWN BELOW AND RIGHTS INCIDENTAL THERETO, AS GRANTED IN A DOCUMENT:
   PURPOSE: 10 FOOT SANITARY AND STORM SEWER EASEMENT, INCLUDING THE RIGHT OF INGRESS AND EGRESS TO, UPON
   AND OVER THE ABOVE–DESCRIBED PROPERTY AND THE RIGHT TO CONSTRUCT, REPAIR, REPLACE, MAINTAIN AND CLEAN SAID SANITARY AND STORM SEWER.
   RECORDING DATE: SEPTEMBER 29, 2004
   RECORDING NO.: 20040929002055
   AFFECTS: PORTION OF SAID PREMISES AND OTHER PROPERTY

9–15 THESE EXCEPTION ITEMS ARE NOT SURVEY MATTERS AND ARE NOT ABLE TO BE PLOTTED ON THE SURVEY.

SHT. 1 OF 2

LOCATED IN NW ¼ OF THE NE¼ OF SECTION 30, TOWNSHIP 24N, RANGE 5E, W.M.

FOR: THE ESTATE OF JAMES H. ALTMAN, SR.

PLANT-190204

TOPOGRAPHIC SURVEY

DRAFTED: JR | CHECKED: EMW
DATE: 3/24/2025 | JOB NO.: PLANT-190204
FIELD CREW:BA, DF, AJ, AW

WASHINGTON — EVAN M. WILLIAMS — 22400 — REGISTERED PROFESSIONAL LAND SURVEYOR — 3/24/25

TAX PARCEL NUMBERS 3024059213, 3024059001, 3024059043, 3024059151
MERCER ISLAND, WA 98040

INFORMED LAND SURVEY
PO Box 5137
Tacoma, WA 98415-0137
Phone: 253-627-2070
admin@i-landsurvey.com
www.i-landsurvey.com

LAND SURVEYING • MAPPING • CONSTRUCTION LAYOUT

TOPOGRAPHIC SURVEY

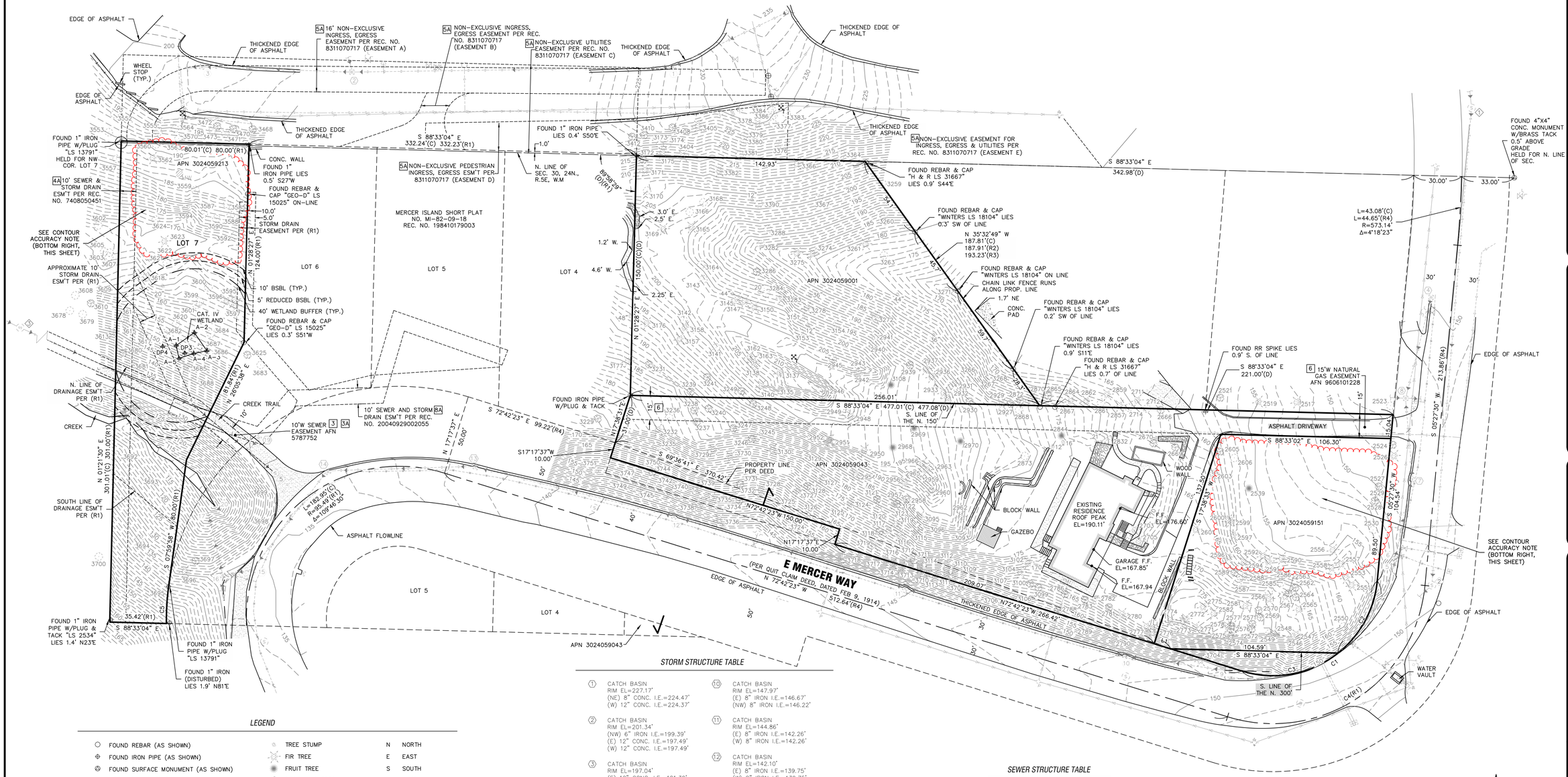

LEGEND

- FOUND REBAR (AS SHOWN)
- FOUND IRON PIPE (AS SHOWN)
- FOUND SURFACE MONUMENT (AS SHOWN)
- WETLAND MARKER FLAG
- WATER VALVE
- FIRE HYDRANT
- WATER METER
- CATCH BASIN
- SEWER MANHOLE
- POWER METER
- GUY POLE
- POWER POLE
- POWER POLE W/DROP & TRANSFORMER
- POWER POLE W/LIGHT
- POWER POLE W/LIGHT & TRANSFORMER
- POWER POLE W/LIGHT, TRANSFORMER & DROP
- GUY ANCHOR
- TELEPHONE PEDESTAL
- GUARD POST
- SIGN
- MB MAIL BOX
- MW MONITORING WELL
- TREE STUMP
- FIR TREE
- FRUIT TREE
- DECIDUOUS TREE
- CEDAR TREE
- SEWER LINE
- STORM DRAIN LINE
- WATER LINE
- GAS LINE
- OVERHEAD UTILITY LINE
- CHAIN LINK FENCE
- EDGE OF CREEK
- CENTERLINE OF DITCH
- GRAVEL SURFACE
- ASPHALT SURFACE
- ROCK WALL/ROCKERY
- CONCRETE SURFACE
- (M) DISTANCE AS MEASURED
- (C) DISTANCE AS CALCULATED
- (R) DISTANCE AS REFERENCED
- (D) DISTANCE PER DEED

N	NORTH
E	EAST
S	SOUTH
W	WEST
NW	NORTHWEST
NE	NORTHEAST
SE	SOUTHEAST
SW	SOUTHWEST
CONC.	CONCRETE
EL	ELEVATION

STORM STRUCTURE TABLE

1. CATCH BASIN
RIM EL=227.17'
(NE) 8" CONC. I.E.=224.47'
(W) 12" CONC. I.E.=224.37'

2. CATCH BASIN
RIM EL=201.34'
(NW) 6" IRON I.E.=199.39'
(E) 12" CONC. I.E.=197.49'
(W) 12" CONC. I.E.=197.49'

3. CATCH BASIN
RIM EL=197.04'
(E) 12" CONC. I.E.=191.39'
(SW) 12" CMP I.E.=191.39'

4. CATCH BASIN
RIM EL=150.05'
(SW) 12" CONC. I.E.=147.90'

5. 8" IRON CULVERT I.E.=146.65'

6. CATCH BASIN
RIM EL=148.14'
(N) 8" IRON I.E.=146.34'
(S) 8" IRON I.E.=146.54'

7. CATCH BASIN
RIM EL=148.34'
(NW) 12" CONC. I.E.=145.84'
(S) 8" IRON I.E.=145.94'

8. CATCH BASIN TYP. II
ROUND GRATED LID
RIM EL=147.12'
(NE) 12" CONC. I.E.=137.37'
(SE) 12" CONC. I.E.=137.42'
(E) 12" CONC. I.E.=132.07'
(W) 12" CONC. I.E.=14.80'

9. 12" CONC. CULVERT
I.E.=147.52'

10. CATCH BASIN
RIM EL=147.97'
(E) 8" IRON I.E.=146.67'
(NW) 8" IRON I.E.=146.22'

11. CATCH BASIN
RIM EL=144.86'
(E) 8" IRON I.E.=142.26'
(W) 8" IRON I.E.=142.26'

12. CATCH BASIN
RIM EL=142.10'
(E) 8" IRON I.E.=139.75'
(W) 8" IRON I.E.=139.75'

13. CATCH BASIN
RIM EL=138.40'
(E) 8" IRON I.E.=136.05'
(W) 12" PLASTIC I.E.=135.90'

14. CATCH BASIN
RIM EL=135.63'
(NE) 12" PLASTIC I.E.=133.23'
(SW) 12" PLASTIC I.E.=133.23'

15. CATCH BASIN
RIM EL=135.24'
(NE) 12" PLASTIC I.E.=132.64'
(SW) 12" PLASTIC I.E.=132.64'

16. CATCH BASIN
RIM EL=133.51'
(NW) 12" PLASTIC I.E.=126.86'
(S) 12" CONC. I.E.=127.56'
(NE) 12" PLASTIC I.E.=130.91'

17. 12" CONC. CULVERT I.E.=110.99'

18. 6" PVC CULVERT I.E.=119.56'

19. CATCH BASIN
RIM EL=135.09'
(N) 8" PLASTIC I.E.=132.79'
(SW) 6" PVC I.E.=132.69'

20. 36"X36" CONC. INLET 107.63'

SEWER STRUCTURE TABLE

1. SEWER MANHOLE
RIM EL=152.81'
(NW) 8" CONC. I.E.=145.41'
(S) 8" CONC. I.E.=145.31'

2. SEWER MANHOLE
RIM EL=149.41'
(N) 8" CONC. I.E.=141.36'
(SW) 8" CONC. I.E.=141.26'

3. SEWER MANHOLE
RIM EL=134.30'
(SE) 10" CONC. I.E.=126.45'
(NW) 10" CONC. I.E.=126.55'

4. SEWER MANHOLE
RIM EL=131.18'
(NW) 10" CONC. I.E.=125.83'
(SE) 10" CONC. I.E.=125.73'

5. SEWER MANHOLE
RIM EL=135.68'
(NW) 10" CONC. I.E.=125.58'
(E) 10" CONC. I.E.=125.48'
(NE) 8" CONC. I.E.=125.68'
(SE) 8" CONC. I.E.=125.73'

CURVE TABLE

CURVE	ARC LENGTH	RADIUS	DELTA ANGLE
C1	116.40'	65.49'	101°50'07"
C2	52.77'	65.49'	46°09'52"
C3	63.63'	65.49'	55°40'15"
C4	169.72'	95.49'	101°50'07"
C5	23.18'	145.49'	9°07'43"

LINE TABLE

LINE	BEARING	DISTANCE
L1	N 72°42'23" W	10.82'

CONTOUR ACCURACY NOTE

ALL CONTOURS SHOWN WITHIN THE RED AREA COMPLY WITH THE CITY OF MERCER ISLAND ACCURACY STANDARDS OF BEING WITHIN A HALF FOOT CONTOUR INTERVAL.

GRAPHIC SCALE
0 15 30 60
1" = 30 FEET

NOTE:
THE EXISTING UTILITIES AS SHOWN ARE ONLY APPROXIMATE AND ARE BASED ON THE BEST AVAILABLE INFORMATION. IT SHALL BE THE CONTRACTOR'S RESPONSIBILITY TO VERIFY THE SIZE, TYPE, LOCATION, AND DEPTH OF ALL EXISTING UTILITIES PRIOR TO STARTING CONSTRUCTION, AND INFORM THE DESIGN ENGINEER OF ANY DISCREPANCIES.

Call Before You Dig
1-800-424-5555

SHT. 2 OF 2

LOCATED IN NW 1/4 OF THE NE 1/4 OF SECTION 30, TOWNSHIP 24N., RANGE 5E., W.M.

FOR: THE ESTATE OF JAMES H. ALTMAN, SR.

PLANT-190204

TOPOGRAPHIC SURVEY

DRAFTED: JR | CHECKED: EMW
DATE: 3/24/2025 | JOB NO.: PLANT-190204
SCALE: 1"= 30' | FIELD CREW/BA, DF, AJ, AW

TAX PARCEL NUMBERS 3024059213, 3024059001, 3024059043, 3024059151
MERCER ISLAND, WA 98040

INFORMED LAND SURVEY
PO Box 5137
Tacoma, WA 98415-0137
Phone: 253-627-2070
admin@i-landsurvey.com
www.i-landsurvey.com
LAND SURVEYING • MAPPING • CONSTRUCTION LAYOUT

GENERAL PLAN NOTES

A. DO NOT SCALE DRAWINGS. USE DIMENSIONS GIVEN.
B. ALL DIMENSIONS ARE TO FACE OF FRAMING, MASONRY, CONCRETE OR FOUNDATION (U.N.O.).
C. REF. SHEET A0.1 FOR GENERAL ARCH'L NOTES.
D. ALL DOORS SHALL BE CENTERED ON WALL OR 6" FROM ADJACENT WALL U.N.O.
E. ALL OPERABLE WINDOWS SHALL HAVE SCREENS AND BE CONTROLLABLE AND SECURABLE PER SRC M1507.3.4.4.
F. EMERGENCY ESCAPE AND RESCUE OPENINGS SHALL BE INSTALLED IN EVERY SLEEPING ROOM BELOW THE 4TH STORY PER 2021 SRC R310.
   - MIN. 5.7 SF NET CLR OPENABLE AREA
   - MIN. 24" NET CLR OPENABLE HEIGHT
   - MIN. 20" NET CLR OPENABLE WIDTH
   - MAX. 44" FINISHED SILL HEIGHT
   - OPENABLE W/O KEYS OR SPECIAL TOOLS
G. PER WASHINGTON ENERGY CODE, RESIDENTIAL FOR SMALL RESIDENCE, (5) CREDITS ARE REQUIRED. THE FOLLOWING CREDITS ARE PURSUED:
   - ENERGY EQUALIZATION: OPTION 4 (3 CREDITS)
   - OPTION 1.2: EFF. BUILDING ENVELOPE (1 CREDIT)
   - OPTION 2.2: AIR LEAKAGE CONTROL AND EFFICIENT VENTILATION (1.5 CREDITS)
   - OPTION 3.3: HIGH EFFICIENCY HVAC (0.5 CREDIT)
   - OPTION 3.11: SMART THERMOSTAT (0.5 CREDIT)
   - OPTION 4.1: HIGH EFFICIENCY HVAC DISTRIBUTION (0.5 CREDIT)
   - OPTION 5.6: EFFICIENT WATER HEATING (2 CREDITS)

KEYNOTES

LEGEND

- (N) INSULATED CONCRETE WALL
- (N) 2x6 FRAMED WALL W/ EXT. INSULATION
- (N) 2x6 FRAMED WALL
- (N) 2x4 FRAMED WALL
- PARTIAL HEIGHT WALL
- (E) EXHAUST FAN:
  1: 50 CFM (ON SWITCH)
  2: 100 CFM (ON SWITCH)
  3: 100 CFM RANGE HOOD
- (SD) SMOKE DETECTOR
- (CD) CARBON MONOXIDE DETECTOR
- (CSD) COMBO SMOKE/CO DETECTOR
- (HD) HEAT DETECTOR

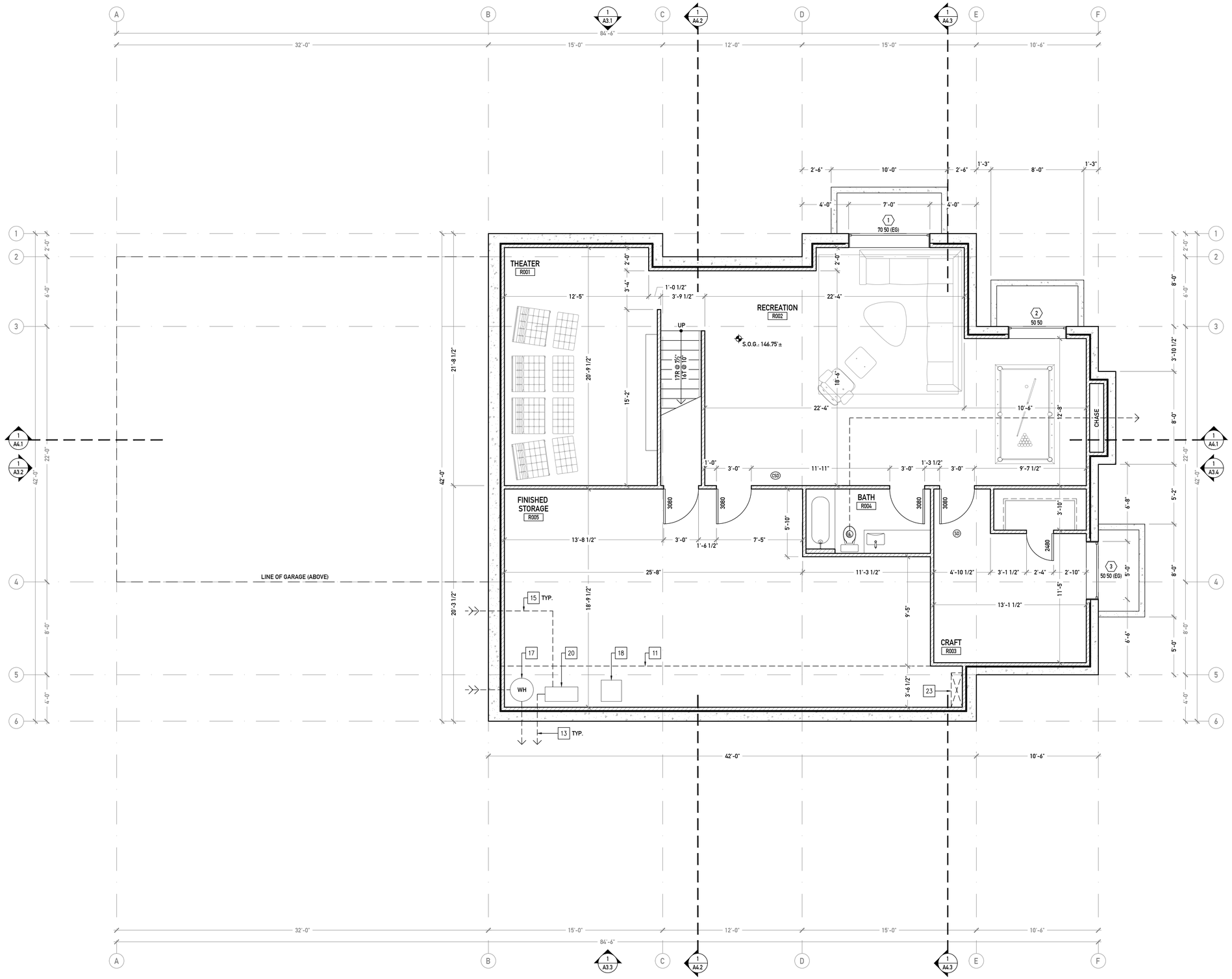

1 A2.1 BASEMENT PLAN
SCALE: 1/4" = 1'-0"

ORIGINAL SHEET SIZE: 24"x 36"

CITIZEN DESIGN

NEW CONSTRUCTION
MERCER ISLAND 6427
6427 E MERCER WAY, MERCER ISLAND, WA 98040

City of MERCER ISLAND
PERMIT
June 18, 2025

PERMIT NUMBER

FOR PLANNING DEPT USE ONLY

BASEMENT PLAN
SCALE: AS NOTED

A2.1

GENERAL PLAN NOTES

A. DO NOT SCALE DRAWINGS. USE DIMENSIONS GIVEN.
B. ALL DIMENSIONS ARE TO FACE OF FRAMING, MASONRY, CONCRETE OR FOUNDATION (U.N.O.).
C. REF. SHEET A0.1 FOR GENERAL ARCH'L NOTES.
D. ALL DOORS SHALL BE CENTERED ON WALL OR 6" FROM ADJACENT WALL U.N.O.
E. ALL OPERABLE WINDOWS SHALL HAVE SCREENS AND BE CONTROLLABLE AND SECURABLE PER SRC M1507.3.4.4.
F. EMERGENCY ESCAPE AND RESCUE OPENINGS SHALL BE INSTALLED IN EVERY SLEEPING ROOM BELOW THE 4TH STORY PER 2021 SRC R310.
   - MIN. 5.7 SF NET CLR OPENABLE AREA
   - MIN. 24" NET CLR OPENABLE HEIGHT
   - MIN. 20" NET CLR OPENABLE WIDTH
   - MAX. 44" FINISHED SILL HEIGHT
   - OPENABLE W/O KEYS OR SPECIAL TOOLS
G. PER WASHINGTON ENERGY CODE, RESIDENTIAL FOR SMALL RESIDENCE, (5) CREDITS ARE REQUIRED. THE FOLLOWING CREDITS ARE PURSUED:
   - ENERGY EQUALIZATION: OPTION 4 (3 CREDITS)
   - OPTION 1.2: EFF. BUILDING ENVELOPE (1 CREDIT)
   - OPTION 2.2: AIR LEAKAGE CONTROL AND EFFICIENT VENTILATION (1.5 CREDITS)
   - OPTION 3.3: HIGH EFFICIENCY HVAC (0.5 CREDIT)
   - OPTION 3.11: SMART THERMOSTAT (0.5 CREDIT)
   - OPTION 4.1: HIGH EFFICIENCY HVAC DISTRIBUTION (0.5 CREDIT)
   - OPTION 5.6: EFFICIENT WATER HEATING (2 CREDITS)

KEYNOTES

LEGEND

- (N) INSULATED CONCRETE WALL
- (N) 2x6 FRAMED WALL W/ EXT. INSULATION
- (N) 2x6 FRAMED WALL
- (N) 2x4 FRAMED WALL
- PARTIAL HEIGHT WALL
- (6) EXHAUST FAN:
  1. 50 CFM (ON SWITCH)
  2. 100 CFM (ON SWITCH)
  3. 100 CFM RANGE HOOD
- (SD) SMOKE DETECTOR
- (CD) CARBON MONOXIDE DETECTOR
- (CSD) COMBO SMOKE/CO DETECTOR
- (HD) HEAT DETECTOR

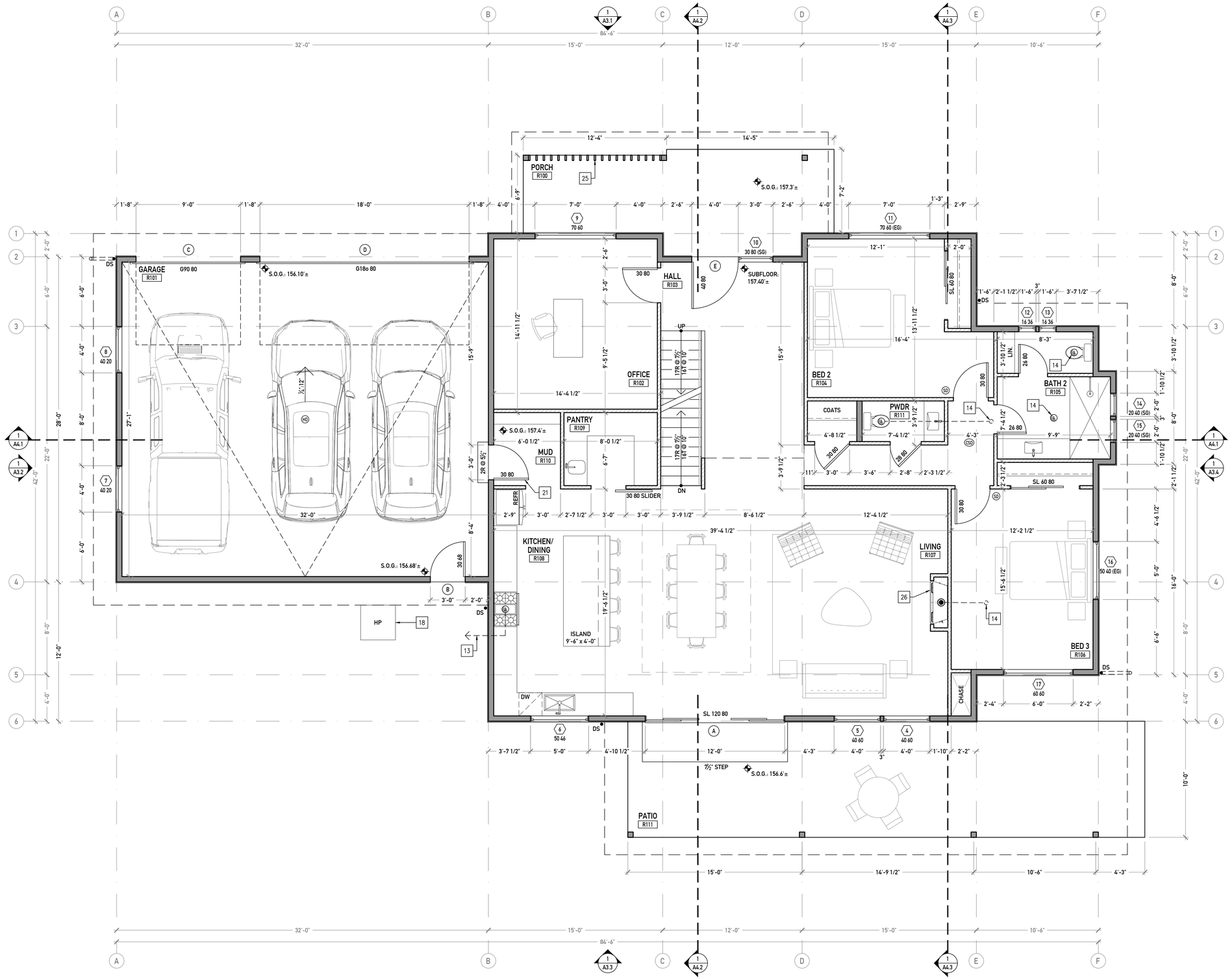

1 A2.2 FIRST FLOOR PLAN
SCALE: 1/4" = 1'-0"

N

0 2 4 8
1/4" = 1'-0"

ORIGINAL SHEET SIZE: 24"x 36"

CITIZEN DESIGN

NEW CONSTRUCTION
MERCER ISLAND 6427
6427 E MERCER WAY, MERCER ISLAND, WA 98040

City of MERCER ISLAND
PERMIT
June 18, 2025

PERMIT NUMBER

FOR PLANNING DEPT USE ONLY

FIRST FLOOR PLAN
SCALE: AS NOTED

A2.2

GENERAL PLAN NOTES

A. DO NOT SCALE DRAWINGS. USE DIMENSIONS GIVEN.
B. ALL DIMENSIONS ARE TO FACE OF FRAMING, MASONRY, CONCRETE OR FOUNDATION (U.N.O.).
C. REF. SHEET A0.1 FOR GENERAL ARCH'L NOTES.
D. ALL DOORS SHALL BE CENTERED ON WALL OR 6" FROM ADJACENT WALL U.N.O.
E. ALL OPERABLE WINDOWS SHALL HAVE SCREENS AND BE CONTROLLABLE AND SECURABLE PER SRC M1507.3.4.4.
F. EMERGENCY ESCAPE AND RESCUE OPENINGS SHALL BE INSTALLED IN EVERY SLEEPING ROOM BELOW THE 4TH STORY PER 2021 SRC R310.
   - MIN. 5.7 SF NET CLR OPENABLE AREA
   - MIN. 24" NET CLR OPENABLE HEIGHT
   - MIN. 20" NET CLR OPENABLE WIDTH
   - MAX. 44" FINISHED SILL HEIGHT
   - OPENABLE W/O KEYS OR SPECIAL TOOLS
G. PER WASHINGTON ENERGY CODE, RESIDENTIAL FOR SMALL RESIDENCE, (5) CREDITS ARE REQUIRED. THE FOLLOWING CREDITS ARE PURSUED:
   - ENERGY EQUALIZATION: OPTION 4 (3 CREDITS)
   - OPTION 1.2: EFF. BUILDING ENVELOPE (1 CREDIT)
   - OPTION 2.2: AIR LEAKAGE CONTROL AND EFFICIENT VENTILATION (1.5 CREDITS)
   - OPTION 3.3: HIGH EFFICIENCY HVAC (0.5 CREDIT)
   - OPTION 3.11: SMART THERMOSTAT (0.5 CREDIT)
   - OPTION 4.1: HIGH EFFICIENCY HVAC DISTRIBUTION (0.5 CREDIT)
   - OPTION 5.6: EFFICIENT WATER HEATING (2 CREDITS)

KEYNOTES

LEGEND

- (N) INSULATED CONCRETE WALL
- (N) 2x6 FRAMED WALL W/ EXT. INSULATION
- (N) 2x6 FRAMED WALL
- (N) 2x4 FRAMED WALL
- PARTIAL HEIGHT WALL
- (E) EXHAUST FAN:
  1: 50 CFM (ON SWITCH)
  2: 100 CFM (ON SWITCH)
  3: 100 CFM RANGE HOOD
- (SD) SMOKE DETECTOR
- (CD) CARBON MONOXIDE DETECTOR
- (CSD) COMBO SMOKE/CO DETECTOR
- (HD) HEAT DETECTOR

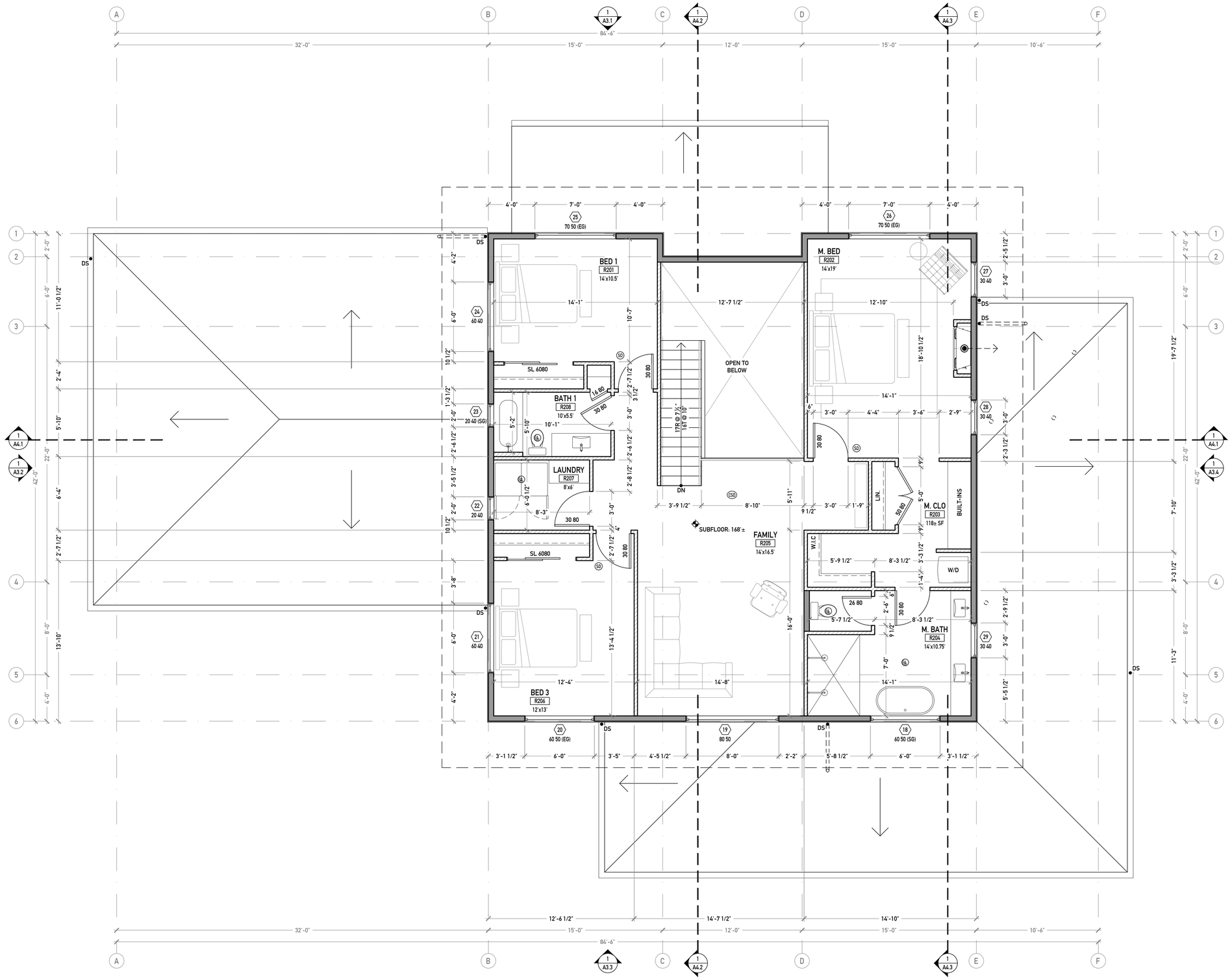

1 A2.3 SECOND FLOOR PLAN
SCALE: 1/4" = 1'-0"

N

0 2 4 8
1/4" = 1'-0"

ORIGINAL SHEET SIZE: 24"x 36"

CITIZEN DESIGN

NEW CONSTRUCTION
MERCER ISLAND 6427
6427 E MERCER WAY, MERCER ISLAND, WA 98040

City of MERCER ISLAND
PERMIT
June 18, 2025

PERMIT NUMBER

FOR PLANNING DEPT USE ONLY

SECOND FLOOR PLAN
SCALE: AS NOTED
A2.3

GENERAL PLAN NOTES

A. DO NOT SCALE DRAWINGS. USE DIMENSIONS GIVEN.
B. ALL DIMENSIONS ARE TO FACE OF FRAMING, MASONRY, CONCRETE OR FOUNDATION (U.N.O.).
C. REF. SHEET A0.1 FOR GENERAL ARCH'L NOTES.
D. ALL DOORS SHALL BE CENTERED ON WALL OR 6" FROM ADJACENT WALL U.N.O.
E. ALL OPERABLE WINDOWS SHALL HAVE SCREENS AND BE CONTROLLABLE AND SECURABLE PER SRC M1507.3.4.4.
F. EMERGENCY ESCAPE AND RESCUE OPENINGS SHALL BE INSTALLED IN EVERY SLEEPING ROOM BELOW THE 4TH STORY PER 2021 SRC R310.
   - MIN. 5.7 SF NET CLR OPENABLE AREA
   - MIN. 24" NET CLR OPENABLE HEIGHT
   - MIN. 20" NET CLR OPENABLE WIDTH
   - MAX. 44" FINISHED SILL HEIGHT
   - OPENABLE W/O KEYS OR SPECIAL TOOLS
G. PER WASHINGTON ENERGY CODE, RESIDENTIAL FOR SMALL RESIDENCE, (5) CREDITS ARE REQUIRED. THE FOLLOWING CREDITS ARE PURSUED:
   - ENERGY EQUALIZATION: OPTION 4 (3 CREDITS)
   - OPTION 1.2: EFF. BUILDING ENVELOPE (1 CREDIT)
   - OPTION 2.2: AIR LEAKAGE CONTROL AND EFFICIENT VENTILATION (1.5 CREDITS)
   - OPTION 3.3: HIGH EFFICIENCY HVAC (0.5 CREDIT)
   - OPTION 3.11: SMART THERMOSTAT (0.5 CREDIT)
   - OPTION 4.1: HIGH EFFICIENCY HVAC DISTRIBUTION (0.5 CREDIT)
   - OPTION 5.6: EFFICIENT WATER HEATING (2 CREDITS)

KEYNOTES

1. VENTS FROM BELOW.
2. STATIC ROOF VENTILATOR.

ROOF VENT CALCS.

UPPER HOUSE ROOF
ATTIC AREA: 1740 SF
TOTAL REQ'D VENT AREA: 1740 / 150 = 11.6 SF = 1671 SI

TOTAL PROV'D VENT AREA: 2520 SI
PROV'D LOWER VENT AREA: 2112 SI
176 LF CONT. 1" STRIP VENT
176 * 12 * 1 = 2112 SF
PROV'D UPPER VENT AREA: 408 SI
(8) SLANT-BACK STATIC VENTS (MAXX AIR SBV603 OR EQ)
8 * 51 = 204 SI

LOWER HOUSE ROOF
UNVENTED PURSUANT TO IRC 806.5.
REF. SECTIONS FOR ADD'L DETAILS.

GARAGE ROOF
ATTIC AREA: 848 SF
TOTAL REQ'D VENT AREA: 848 / 150 = 5.65 SF = 814 SI

TOTAL PROV'D VENT AREA: 972 SI
PROV'D LOWER VENT AREA: 768 SI
64 LF CONT. 1" STRIP VENT
64 * 12 * 1 = 768 SI
PROV'D UPPER VENT AREA: 204 SI
(4) SLANT-BACK STATIC VENTS (MAXX AIR SBV603 OR EQ)
4 * 51 = 204 SI

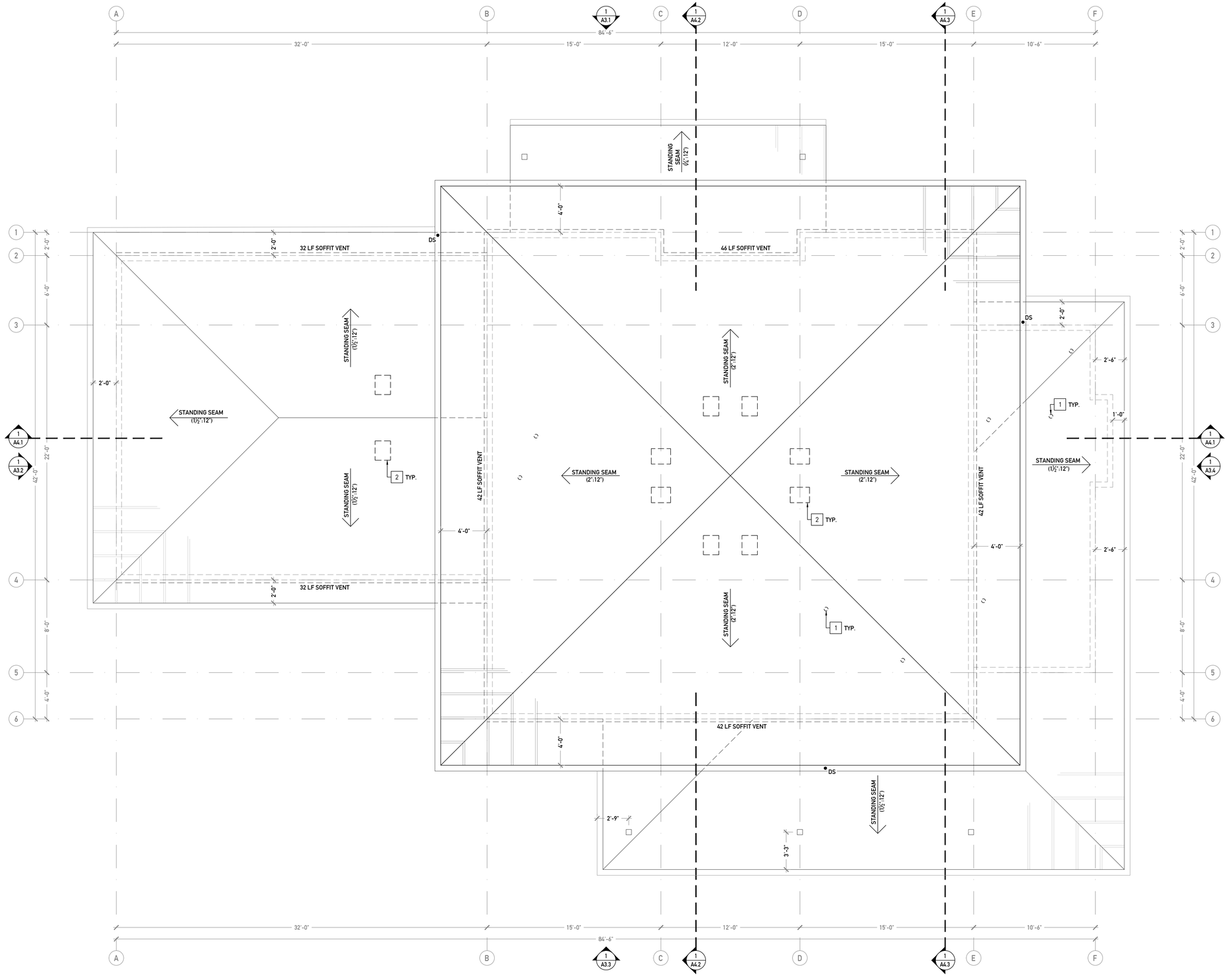

1 A2.4 ROOF PLAN
SCALE: 1/4" = 1'-0"

N

0 2 4 8
1/4" = 1'-0"

ORIGINAL SHEET SIZE: 24"x 36"

CITIZEN DESIGN

NEW CONSTRUCTION
MERCER ISLAND 6427
6427 E MERCER WAY, MERCER ISLAND, WA 98040

City of MERCER ISLAND
PERMIT
June 18, 2025

PERMIT NUMBER

FOR PLANNING DEPT USE ONLY

ROOF PLAN
SCALE: AS NOTED
A2.4

GENERAL ELEVATION NOTES

A. DO NOT SCALE DRAWINGS. USE DIMENSIONS GIVEN.
B. ALL DIMENSIONS ARE TO FACE OF FRAMING. MASONRY, CONCRETE OR FOUNDATION (U.N.O.).
C. REF. SHEET A0.1 FOR GENERAL ARCH'L NOTES.

KEYNOTES

1. HEAT PUMP COMPRESSOR BY OTHERS.
2. MECHANICAL EXHAUST VENT.
3. MECHANICAL INTAKE VENT.
4. DRYER EXHAUST VENT.

MATERIAL LEGEND

DOORS
D-1 FRONT DOOR - BLACK FIBERGLASS
D-2 GARAGE DOOR - BLACK FIBERGLASS
D-3 SLIDER DOOR - BLACK FIBERGLASS
D-4 SWING DOOR - BLACK FIBERGLASS

ROOFING
R-1 STANDING SEAM METAL ROOF - BLACK
R-2 CEDAR T+G SOFFIT - NATURAL

SIDING
S-1 FIBER CEMENT 4" LAP SIDING - BLACK
S-2 FIBER CEMENT PANEL - CHARCOAL
S-3 CEDAR T+G VERT. SIDING - NATURAL
S-4 8" FIBER CEMENT DETAIL BAND - CHARCOAL
S-5 12" FASCIA - BLACK
S-6 CONCRETE FOUNDATION - NATURAL

WINDOWS
W-1 FIBERGLASS WINDOWS - BLACK

DOWNSPOUT
DS-1 METAL DOWNSPOUT - BLACK

GUTTER
G-1 GUTTER - BLACK

SPECIALTY
SP-1 CEDAR SCREEN - NATURAL
SP-2 CONCRETE PLANTER - NATURAL
SP-3 CONCRETE WINDOW WELL - NATURAL

SYMBOL LEGEND

MECHANICAL LOUVER
PTHP PER MFR.
SCUPPER AND DOWNSPOUT

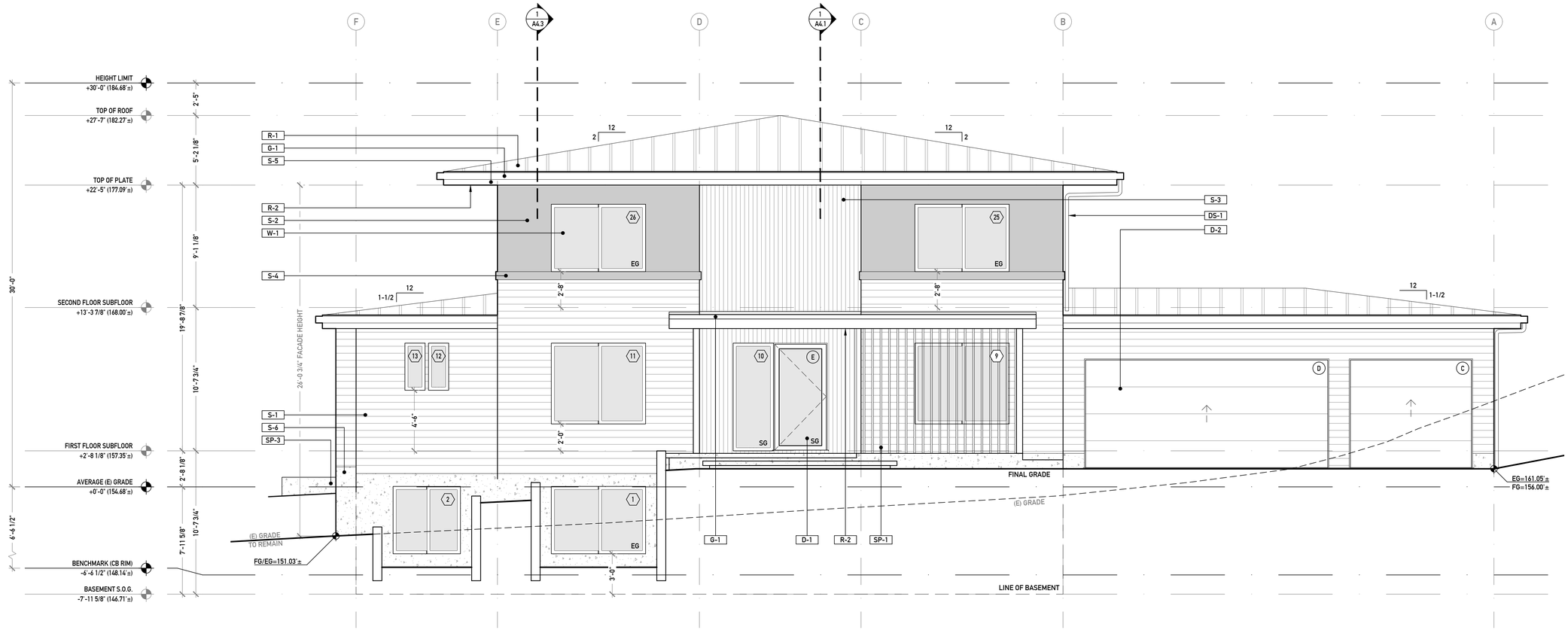

1 A3.1 NORTH ELEVATION
SCALE: 1/4" = 1'-0"

0 2 4 8
1/4" = 1'-0"

ORIGINAL SHEET SIZE: 24"x 36"

CITIZEN DESIGN

NEW CONSTRUCTION
MERCER ISLAND 6427
6427 E MERCER WAY, MERCER ISLAND, WA 98040

City of MERCER ISLAND
PERMIT
June 18, 2025

PERMIT NUMBER

FOR PLANNING DEPT USE ONLY

BUILDING ELEVATIONS
SCALE: AS NOTED
A3.1

GENERAL ELEVATION NOTES

A. DO NOT SCALE DRAWINGS. USE DIMENSIONS GIVEN.
B. ALL DIMENSIONS ARE TO FACE OF FRAMING. MASONRY. CONCRETE OR FOUNDATION (U.N.O.).
C. REF. SHEET A0.1 FOR GENERAL ARCH'L NOTES.

KEYNOTES

1. HEAT PUMP COMPRESSOR BY OTHERS.
2. MECHANICAL EXHAUST VENT.
3. MECHANICAL INTAKE VENT.
4. DRYER EXHAUST VENT.

SYMBOL LEGEND

MECHANICAL LOUVER

PTHP PER MFR.

SCUPPER AND DOWNSPOUT

MATERIAL LEGEND

DOORS
D-1 FRONT DOOR - BLACK FIBERGLASS
D-2 GARAGE DOOR - BLACK FIBERGLASS
D-3 SLIDER DOOR - BLACK FIBERGLASS
D-4 SWING DOOR - BLACK FIBERGLASS

ROOFING
R-1 STANDING SEAM METAL ROOF - BLACK
R-2 CEDAR T+G SOFFIT - NATURAL

SIDING
S-1 FIBER CEMENT 4" LAP SIDING - BLACK
S-2 FIBER CEMENT PANEL - CHARCOAL
S-3 CEDAR T+G VERT. SIDING - NATURAL
S-4 8" FIBER CEMENT DETAIL BAND - CHARCOAL
S-5 12" FASCIA - BLACK
S-6 CONCRETE FOUNDATION - NATURAL

WINDOWS
W-1 FIBERGLASS WINDOWS - BLACK

DOWNSPOUT
DS-1 METAL DOWNSPOUT - BLACK

GUTTER
G-1 GUTTER - BLACK

SPECIALTY
SP-1 CEDAR SCREEN - NATURAL
SP-2 CONCRETE PLANTER - NATURAL
SP-3 CONCRETE WINDOW WELL - NATURAL

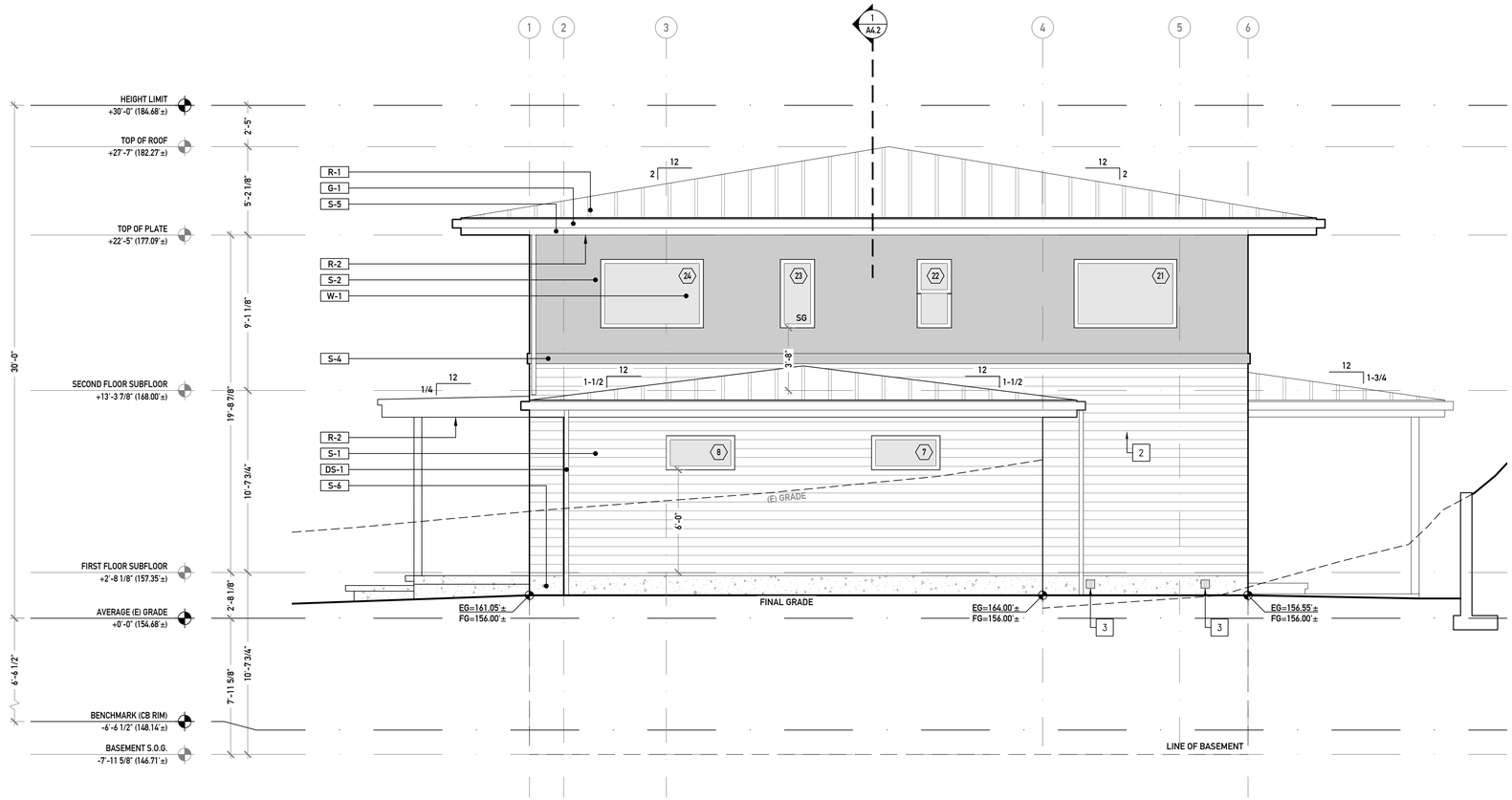

1 A3.2 WEST ELEVATION
SCALE: 1/4" = 1'-0"

0 2 4 8
1/4" = 1'-0"

ORIGINAL SHEET SIZE: 24"x 36"

CITIZEN DESIGN

NEW CONSTRUCTION
MERCER ISLAND 6427
6427 E MERCER WAY, MERCER ISLAND, WA 98040

City of MERCER ISLAND
PERMIT
June 18, 2025

PERMIT NUMBER

FOR PLANNING DEPT USE ONLY

BUILDING ELEVATIONS
SCALE: AS NOTED
A3.2

GENERAL ELEVATION NOTES

A. DO NOT SCALE DRAWINGS. USE DIMENSIONS GIVEN.
B. ALL DIMENSIONS ARE TO FACE OF FRAMING. MASONRY, CONCRETE OR FOUNDATION (U.N.O.).
C. REF. SHEET A0.1 FOR GENERAL ARCH'L NOTES.

KEYNOTES

1. HEAT PUMP COMPRESSOR BY OTHERS.
2. MECHANICAL EXHAUST VENT.
3. MECHANICAL INTAKE VENT.
4. DRYER EXHAUST VENT.

MATERIAL LEGEND

DOORS
D-1 FRONT DOOR - BLACK FIBERGLASS
D-2 GARAGE DOOR - BLACK FIBERGLASS
D-3 SLIDER DOOR - BLACK FIBERGLASS
D-4 SWING DOOR - BLACK FIBERGLASS

ROOFING
R-1 STANDING SEAM METAL ROOF - BLACK
R-2 CEDAR T+G SOFFIT - NATURAL

SIDING
S-1 FIBER CEMENT 4" LAP SIDING - BLACK
S-2 FIBER CEMENT PANEL - CHARCOAL
S-3 CEDAR T+G VERT. SIDING - NATURAL
S-4 8" FIBER CEMENT DETAIL BAND - CHARCOAL
S-5 12" FASCIA - BLACK
S-6 CONCRETE FOUNDATION - NATURAL

WINDOWS
W-1 FIBERGLASS WINDOWS - BLACK

DOWNSPOUT
DS-1 METAL DOWNSPOUT - BLACK

GUTTER
G-1 GUTTER - BLACK

SPECIALTY
SP-1 CEDAR SCREEN - NATURAL
SP-2 CONCRETE PLANTER - NATURAL
SP-3 CONCRETE WINDOW WELL - NATURAL

SYMBOL LEGEND

MECHANICAL LOUVER
PTHP PER MFR.
SCUPPER AND DOWNSPOUT

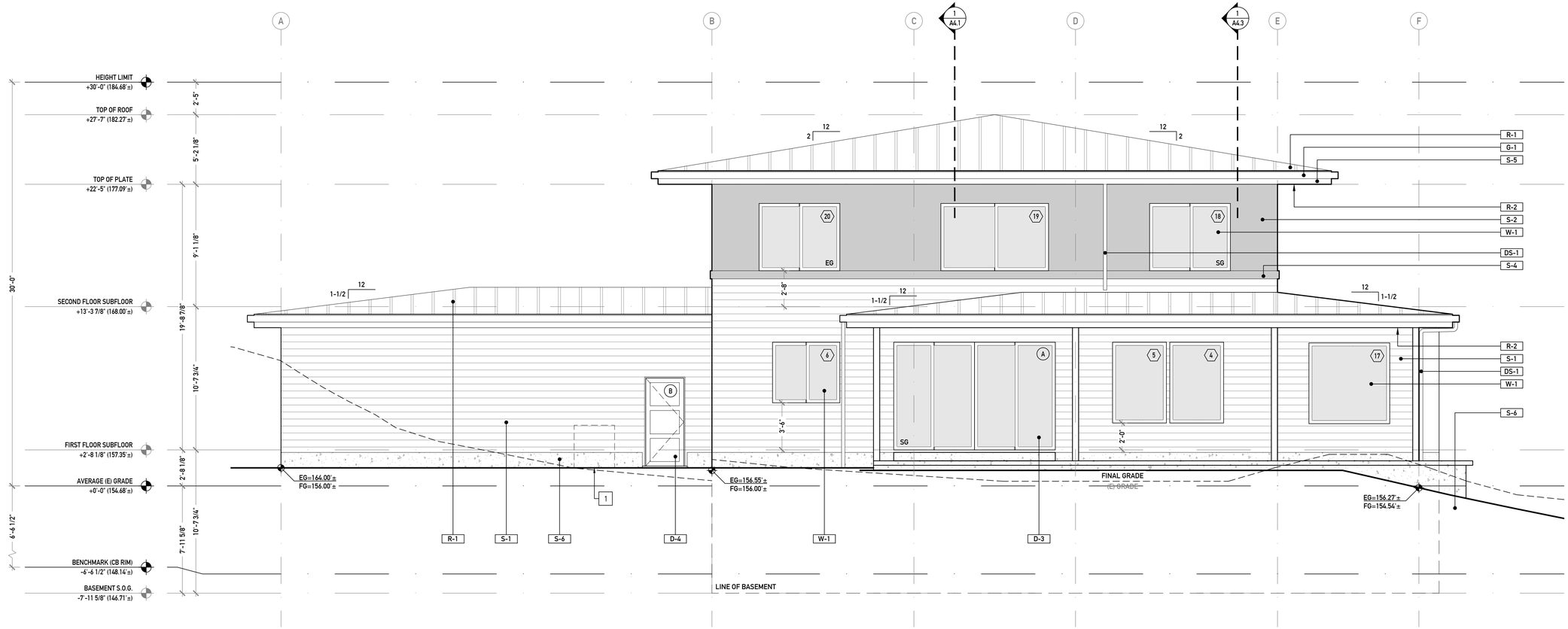

1 / A3.3 SOUTH ELEVATION
SCALE: 1/4" = 1'-0"

0 2 4 8
1/4" = 1'-0"

ORIGINAL SHEET SIZE: 24"x 36"

CITIZEN DESIGN

NEW CONSTRUCTION
MERCER ISLAND 6427
6427 E MERCER WAY, MERCER ISLAND, WA 98040

City of MERCER ISLAND
PERMIT
June 18, 2025

PERMIT NUMBER

FOR PLANNING DEPT USE ONLY

BUILDING ELEVATIONS
SCALE: AS NOTED
A3.3

GENERAL ELEVATION NOTES

A. DO NOT SCALE DRAWINGS. USE DIMENSIONS GIVEN.
B. ALL DIMENSIONS ARE TO FACE OF FRAMING. MASONRY. CONCRETE OR FOUNDATION (U.N.O.).
C. REF. SHEET A0.1 FOR GENERAL ARCH'L NOTES.

KEYNOTES

1. HEAT PUMP COMPRESSOR BY OTHERS.
2. MECHANICAL EXHAUST VENT.
3. MECHANICAL INTAKE VENT.
4. DRYER EXHAUST VENT.

SYMBOL LEGEND

MECHANICAL LOUVER

PTHP PER MFR.

SCUPPER AND DOWNSPOUT

MATERIAL LEGEND

DOORS
D-1 FRONT DOOR - BLACK FIBERGLASS
D-2 GARAGE DOOR - BLACK FIBERGLASS
D-3 SLIDER DOOR - BLACK FIBERGLASS
D-4 SWING DOOR - BLACK FIBERGLASS

ROOFING
R-1 STANDING SEAM METAL ROOF - BLACK
R-2 CEDAR T+G SOFFIT - NATURAL

SIDING
S-1 FIBER CEMENT 4" LAP SIDING - BLACK
S-2 FIBER CEMENT PANEL - CHARCOAL
S-3 CEDAR T+G VERT. SIDING - NATURAL
S-4 8" FIBER CEMENT DETAIL BAND - CHARCOAL
S-5 12" FASCIA - BLACK
S-6 CONCRETE FOUNDATION - NATURAL

WINDOWS
W-1 FIBERGLASS WINDOWS - BLACK

DOWNSPOUT
DS-1 METAL DOWNSPOUT - BLACK

GUTTER
G-1 GUTTER - BLACK

SPECIALTY
SP-1 CEDAR SCREEN - NATURAL
SP-2 CONCRETE PLANTER - NATURAL
SP-3 CONCRETE WINDOW WELL - NATURAL

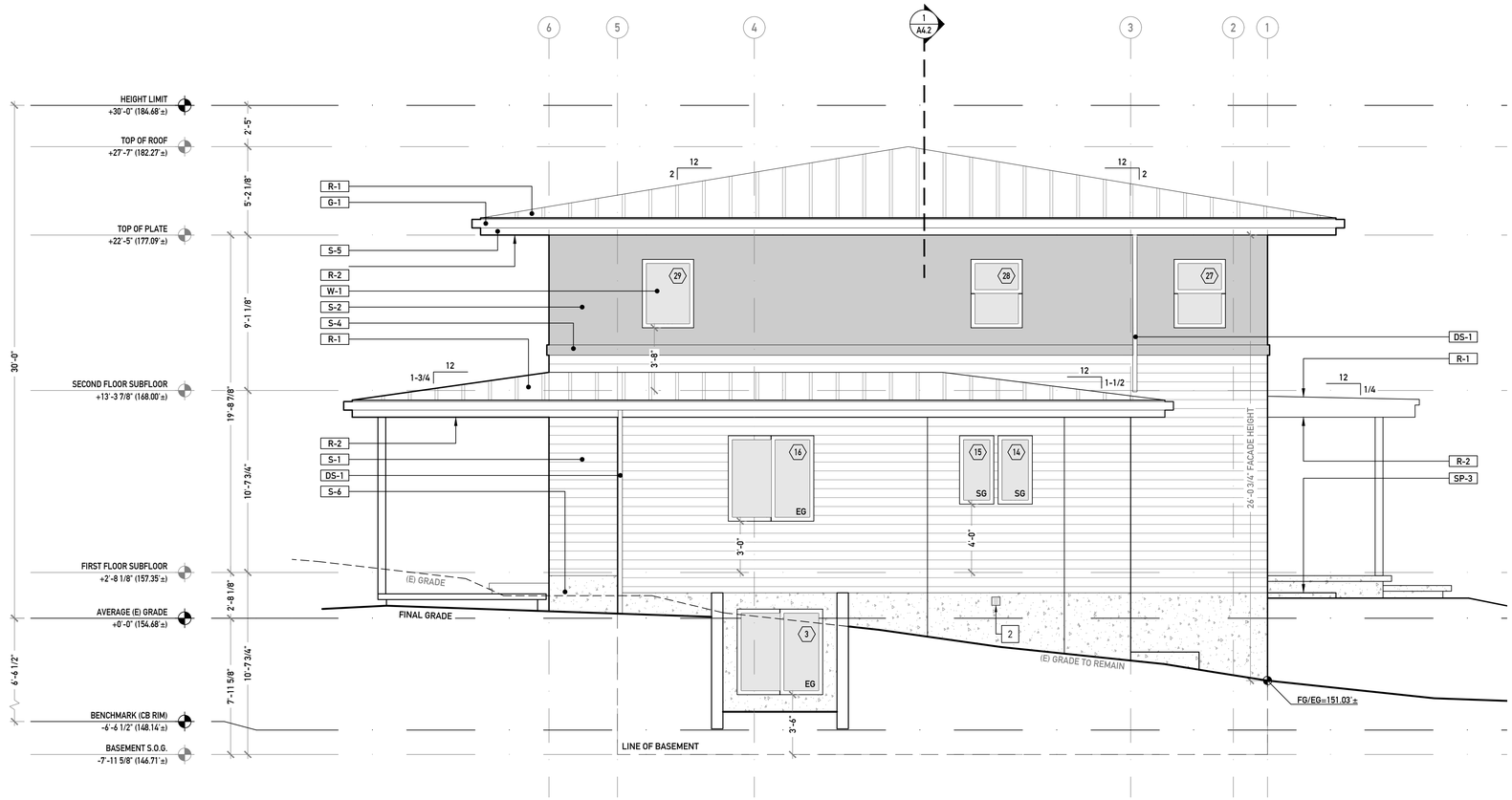

1 A3.4 **EAST ELEVATION**
SCALE: 1/4" = 1'-0"

0 2 4 8
1/4" = 1'-0"

ORIGINAL SHEET SIZE: 24"x 36"

CITIZEN DESIGN

NEW CONSTRUCTION
MERCER ISLAND 6427
6427 E MERCER WAY, MERCER ISLAND, WA 98040

City of MERCER ISLAND
PERMIT
June 18, 2025

PERMIT NUMBER

FOR PLANNING DEPT USE ONLY

BUILDING ELEVATIONS
SCALE: AS NOTED

A3.4

GENERAL SECTION NOTES

A. DO NOT SCALE DRAWINGS. USE DIMENSIONS GIVEN.
B. ALL DIMENSIONS ARE TO FACE OF FRAMING, MASONRY, CONCRETE OR FOUNDATION (U.N.O.).
C. REF. SHEET A0.1 FOR GENERAL ARCH'L NOTES.

KEYNOTES

1. PROVIDE ⅝" GWB AT UNDERSIDE OF STAIRS.
2. CONCRETE RETAINING WALL FOUNDATION PER STRUC'L.
3. STAIR PER DETAIL X.XX.

SYMBOL LEGEND

FRAMING

BLOCKING

WALL ASSEMBLIES

W1 — WALL: TYP. EXTERIOR
SIDING PER ELEVATION
WATER RESISTIVE BARRIER (HYDROGAP OR EQUAL)
R-5 MIN. RIGID INSULATION
SHEATHING PER STRUCTURAL
2x FRAMING PER STRUCTURAL
R-21 MIN. BATT INSULATION
½" GWB

W2 — WALL: INSULATED CONCRETE WALL
DRAINBOARD (BELOW GRADE)
FLUID APPLIED WATERPROOFING (BELOW GRADE)
CONCRETE WALL PER STRUCTURAL
1" RIGID INSULATION (R-5)
TAPED SEAMS PER MFR.
2x FRAMING
R-13 MIN. BATT INSULATION
½" GWB

W3 — WALL: TYP. INTERIOR PARTITION
½" GWB
2x FRAMING PER PLAN @ 16" O.C.
½" GWB

W4 — WALL: INSULATED INTERIOR
½" GWB
2x6 FRAMING PER PLAN @ 16" O.C.
R-21 MIN. BATT INSULATION
½" GWB

FLOOR ASSEMBLIES

F1 — FLOOR: UNINSULATED FRAMED (TYP.)
FINISH FLOORING PER OWNER
SHEATHING & NAILING PER STRUCTURAL
FLOOR TRUSSES PER STRUCTURAL

F2 — FLOOR: INSULATED FRAMED
FINISH FLOORING PER OWNER
SHEATHING & NAILING PER STRUCTURAL
FLOOR TRUSSES PER STRUCTURAL
R-38 BATT INSULATION

F3 — FLOOR: INSULATED SLAB ON GRADE
CONCRETE SLAB PER STRUCTURAL
VAPOR BARRIER (10 MIL MIN.), TAPE SEAMS w/ VINYL SEAM TAPE
R-10 (2" MIN) TAPERED THERMAL BREAK
R-10 (2" XPS MIN.) RIGID INSULATION UNDER ENTIRE SLAB
4" COMPACTED GRAVEL

ROOF/CEILING ASSEMBLIES

R1 — ROOF: TYPICAL
METAL PANEL ROOFING PER OWNER
ICE + WATER SHIELD FOR 24" ABOVE PARAPET
ROOFING UNDERLAYMENT
SHEATHING AND NAILING PER STRUC'L
FRAMING PER STRUC'L
R-49 MIN. BATT INSULATION

R2 — ROOF: UNINSULATED
R1 ASSEMBLY, EXCEPT:
NO CAVITY INSULATION

R3 — ROOF: UNVENTED
R1 ASSEMBLY, EXCEPT:
R-10 MIN. SPRAY FOAM INSUL. BLW SHEATHING
R-38 MIN. BATT INSULATION INSTALLED DIRECTLY BLW SPRAY FOAM INSULATION

UNVENTED ASSEMBLY PURSUANT TO IRC R806.5.1.3.

R4 — ROOF: CANOPY
METAL PANEL ROOFING PER OWNER
TPO MEMBRANE
SHEATHING AND NAILING PER STRUC'L
FRAMING PER STRUC'L RIPPED TO SLOPE

C1 — CEILING: TYPICAL
⅝" GWB

C2 — CEILING: SOFFIT
¾" T&G CEDAR

DECK ASSEMBLIES

D1 — DECK: CONCRETE PATIO
CONCRETE SLAB PER STRUCTURAL
4" COMPACTED GRAVEL

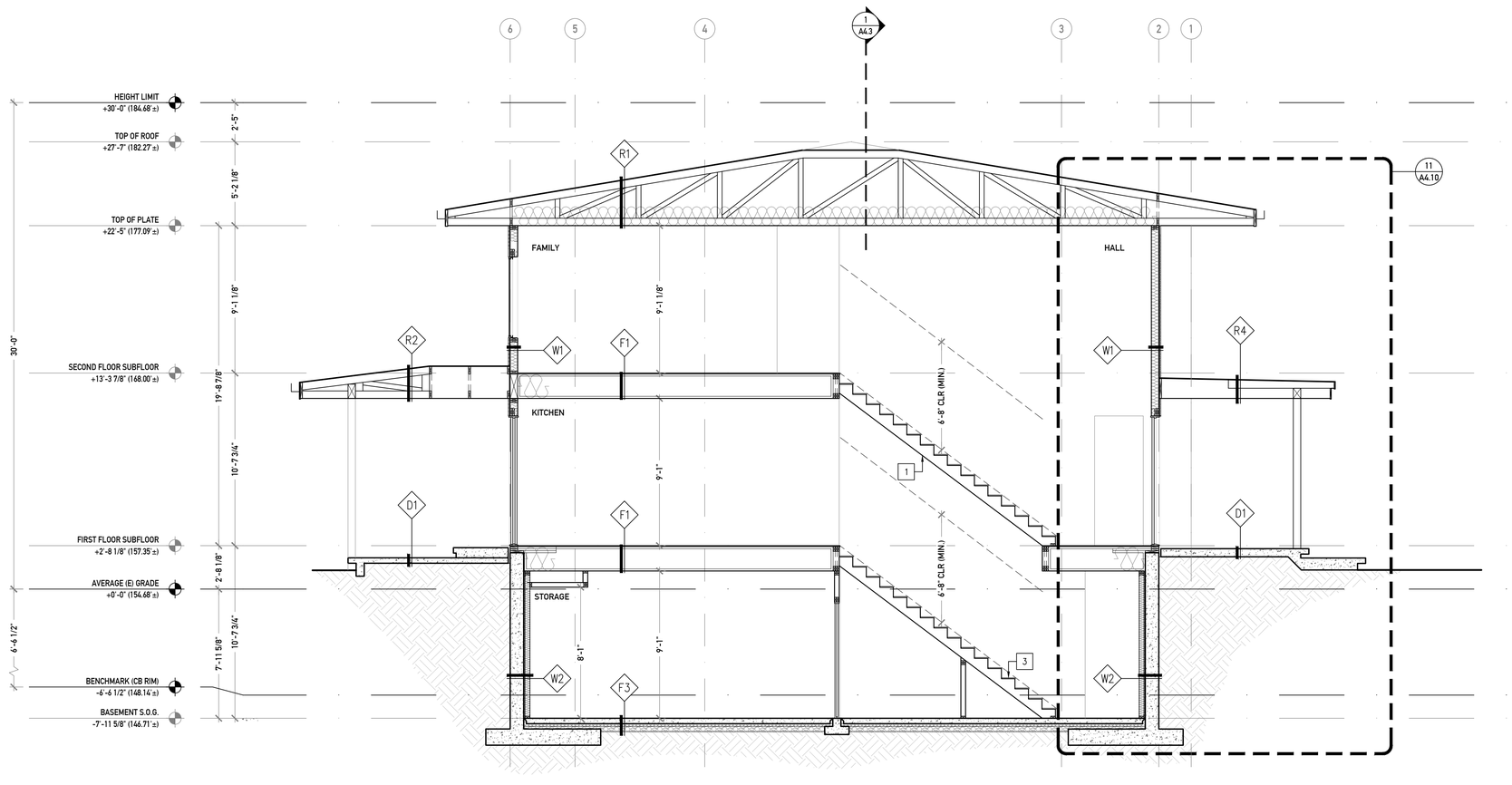

1 A4.1 **TRANSVERSE SECTION AT STAIRS**
SCALE: 1/4" = 1'-0"

0 2 4 8
1/4" = 1'-0"

ORIGINAL SHEET SIZE: 24"x 36"

CITIZEN DESIGN

NEW CONSTRUCTION
MERCER ISLAND 6427
6427 E MERCER WAY, MERCER ISLAND, WA 98040

City of MERCER ISLAND
PERMIT
June 18, 2025

PERMIT NUMBER

FOR PLANNING DEPT USE ONLY

SECTIONS AND ASSEMBLIES
SCALE: AS NOTED

A4.1

GENERAL SECTION NOTES

A. DO NOT SCALE DRAWINGS. USE DIMENSIONS GIVEN.
B. ALL DIMENSIONS ARE TO FACE OF FRAMING, MASONRY, CONCRETE OR FOUNDATION (U.N.O.).
C. REF. SHEET A0.1 FOR GENERAL ARCH'L NOTES.

KEYNOTES

1. PROVIDE ⅝" GWB AT UNDERSIDE OF STAIRS.
2. CONCRETE RETAINING WALL FOUNDATION PER STRUC'L.
3. STAIR PER DETAIL X.XX.

SYMBOL LEGEND

FRAMING

BLOCKING

WALL ASSEMBLIES

W1 — WALL: TYP. EXTERIOR
SIDING PER ELEVATION
WATER RESISTIVE BARRIER (HYDROGAP OR EQUAL)
R-5 MIN. RIGID INSULATION
SHEATHING PER STRUCTURAL
2x FRAMING PER STRUCTURAL
R-21 MIN. BATT INSULATION
½" GWB

W2 — WALL: INSULATED CONCRETE WALL
DRAINBOARD (BELOW GRADE)
FLUID APPLIED WATERPROOFING (BELOW GRADE)
CONCRETE WALL PER STRUCTURAL
1" RIGID INSULATION (R-5)
TAPED SEAMS PER MFR.
2x FRAMING
R-13 MIN. BATT INSULATION
½" GWB

W3 — WALL: TYP. INTERIOR PARTITION
½" GWB
2x FRAMING PER PLAN @ 16" O.C.
½" GWB

W4 — WALL: INSULATED INTERIOR
½" GWB
2x6 FRAMING PER PLAN @ 16" O.C.
R-21 MIN. BATT INSULATION
½" GWB

FLOOR ASSEMBLIES

F1 — FLOOR: UNINSULATED FRAMED (TYP.)
FINISH FLOORING PER OWNER
SHEATHING & NAILING PER STRUCTURAL
FLOOR TRUSSES PER STRUCTURAL

F2 — FLOOR: INSULATED FRAMED
FINISH FLOORING PER OWNER
SHEATHING & NAILING PER STRUCTURAL
FLOOR TRUSSES PER STRUCTURAL
R-38 BATT INSULATION

F3 — FLOOR: INSULATED SLAB ON GRADE
CONCRETE SLAB PER STRUCTURAL
VAPOR BARRIER (10 MIL MIN.), TAPE SEAMS w/ VINYL SEAM TAPE
R-10 (2" MIN) TAPERED THERMAL BREAK
R-10 (2" XPS MIN.) RIGID INSULATION UNDER ENTIRE SLAB
4" COMPACTED GRAVEL

ROOF/CEILING ASSEMBLIES

R1 — ROOF: TYPICAL
METAL PANEL ROOFING PER OWNER
ICE + WATER SHIELD FOR 24" ABOVE PARAPET
ROOFING UNDERLAYMENT
SHEATHING AND NAILING PER STRUC'L
FRAMING PER STRUC'L
R-49 MIN. BATT INSULATION

R2 — ROOF: UNINSULATED
R1 ASSEMBLY, EXCEPT:
NO CAVITY INSULATION

R3 — ROOF: UNVENTED
R1 ASSEMBLY, EXCEPT:
R-10 MIN. SPRAY FOAM INSUL. BLW SHEATHING
R-38 MIN. BATT INSULATION INSTALLED DIRECTLY BLW SPRAY FOAM INSULATION

UNVENTED ASSEMBLY PURSUANT TO IRC R806.5.1.3.

R4 — ROOF: CANOPY
METAL PANEL ROOFING PER OWNER
TPO MEMBRANE
SHEATHING AND NAILING PER STRUC'L
FRAMING PER STRUC'L RIPPED TO SLOPE

C1 — CEILING: TYPICAL
⅝" GWB

C2 — CEILING: SOFFIT
¾" T&G CEDAR

DECK ASSEMBLIES

D1 — DECK: CONCRETE PATIO
CONCRETE SLAB PER STRUCTURAL
4" COMPACTED GRAVEL

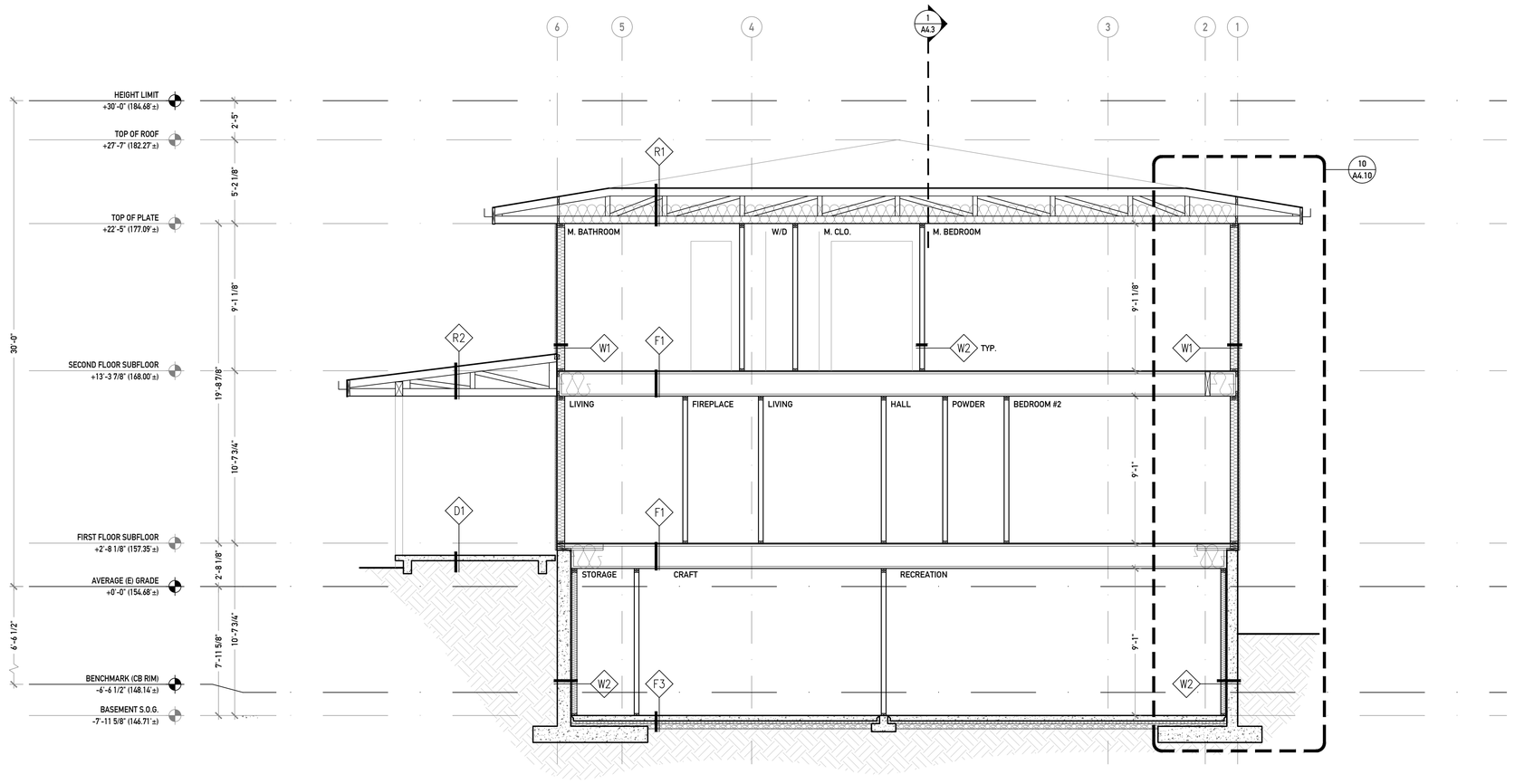

1 A4.2 **TRANSVERSE SECTION NEAR GRID E**
SCALE: 1/4" = 1'-0"

0 2 4 8
1/4" = 1'-0"

ORIGINAL SHEET SIZE: 24"x 36"

CITIZEN DESIGN

NEW CONSTRUCTION
MERCER ISLAND 6427
6427 E MERCER WAY, MERCER ISLAND, WA 98040

City of MERCER ISLAND
PERMIT
June 18, 2025

PERMIT NUMBER

FOR PLANNING DEPT USE ONLY

SECTIONS AND ASSEMBLIES
SCALE: AS NOTED

A4.2

GENERAL SECTION NOTES

A. DO NOT SCALE DRAWINGS. USE DIMENSIONS GIVEN.
B. ALL DIMENSIONS ARE TO FACE OF FRAMING, MASONRY, CONCRETE OR FOUNDATION (U.N.O.).
C. REF. SHEET A0.1 FOR GENERAL ARCH'L NOTES.

KEYNOTES

1. PROVIDE ⅝" GWB AT UNDERSIDE OF STAIRS.
2. CONCRETE RETAINING WALL FOUNDATION PER STRUC'L.
3. STAIR PER DETAIL X.XX.

SYMBOL LEGEND

FRAMING

BLOCKING

WALL ASSEMBLIES

W1 — WALL: TYP. EXTERIOR
SIDING PER ELEVATION
WATER RESISTIVE BARRIER (HYDROGAP OR EQUAL)
R-5 MIN. RIGID INSULATION
SHEATHING PER STRUCTURAL
2x FRAMING PER STRUCTURAL
R-21 MIN. BATT INSULATION
½" GWB

W2 — WALL: INSULATED CONCRETE WALL
DRAINBOARD (BELOW GRADE)
FLUID APPLIED WATERPROOFING (BELOW GRADE)
CONCRETE WALL PER STRUCTURAL
1" RIGID INSULATION (R-5)
TAPED SEAMS PER MFR.
2x FRAMING
R-13 MIN. BATT INSULATION
½" GWB

W3 — WALL: TYP. INTERIOR PARTITION
½" GWB
2x FRAMING PER PLAN @ 16" O.C.
½" GWB

W4 — WALL: INSULATED INTERIOR
½" GWB
2x6 FRAMING PER PLAN @ 16" O.C.
R-21 MIN. BATT INSULATION
½" GWB

FLOOR ASSEMBLIES

F1 — FLOOR: UNINSULATED FRAMED (TYP.)
FINISH FLOORING PER OWNER
SHEATHING & NAILING PER STRUCTURAL
FLOOR TRUSSES PER STRUCTURAL

F2 — FLOOR: INSULATED FRAMED
FINISH FLOORING PER OWNER
SHEATHING & NAILING PER STRUCTURAL
FLOOR TRUSSES PER STRUCTURAL
R-38 BATT INSULATION

F3 — FLOOR: INSULATED SLAB ON GRADE
CONCRETE SLAB PER STRUCTURAL
VAPOR BARRIER (10 MIL MIN.), TAPE SEAMS w/ VINYL SEAM TAPE
R-10 (2" MIN) TAPERED THERMAL BREAK
R-10 (2" XPS MIN.) RIGID INSULATION UNDER ENTIRE SLAB
4" COMPACTED GRAVEL

ROOF/CEILING ASSEMBLIES

R1 — ROOF: TYPICAL
METAL PANEL ROOFING PER OWNER
ICE + WATER SHIELD FOR 24" ABOVE PARAPET
ROOFING UNDERLAYMENT
SHEATHING AND NAILING PER STRUC'L
FRAMING PER STRUC'L
R-49 MIN. BATT INSULATION

R2 — ROOF: UNINSULATED
R1 ASSEMBLY, EXCEPT:
NO CAVITY INSULATION

R3 — ROOF: UNVENTED
R1 ASSEMBLY, EXCEPT:
R-10 MIN. SPRAY FOAM INSUL. BLW SHEATHING
R-38 MIN. BATT INSULATION INSTALLED DIRECTLY BLW SPRAY FOAM INSULATION

UNVENTED ASSEMBLY PURSUANT TO IRC R806.5.1.3.

R4 — ROOF: CANOPY
METAL PANEL ROOFING PER OWNER
TPO MEMBRANE
SHEATHING AND NAILING PER STRUC'L
FRAMING PER STRUC'L RIPPED TO SLOPE

C1 — CEILING: TYPICAL
⅝" GWB

C2 — CEILING: SOFFIT
¾" T&G CEDAR

DECK ASSEMBLIES

D1 — DECK: CONCRETE PATIO
CONCRETE SLAB PER STRUCTURAL
4" COMPACTED GRAVEL

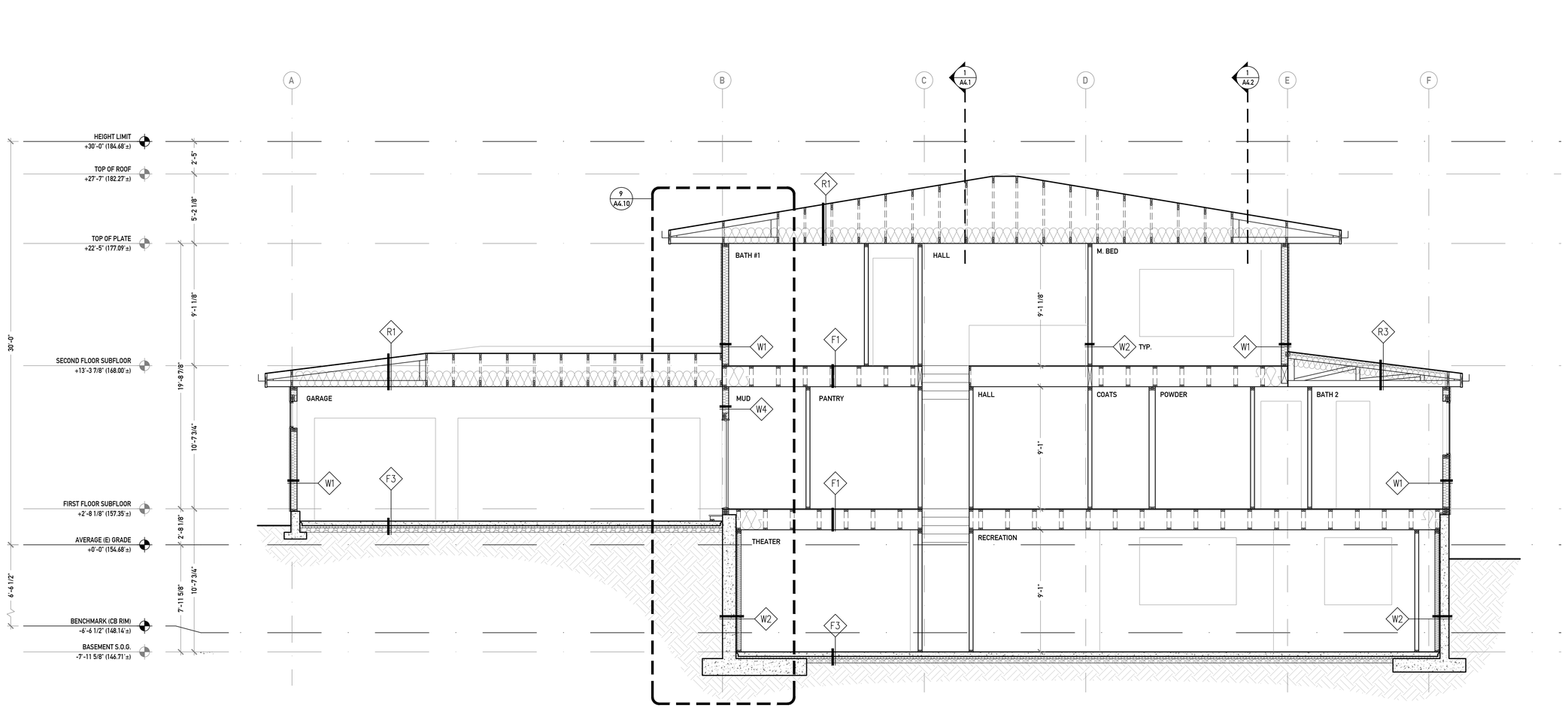

1 / A4.3 **LONGITUDINAL SECTION**
SCALE: 1/4" = 1'-0"

0 2 4 8
1/4" = 1'-0"

ORIGINAL SHEET SIZE: 24"x 36"

CITIZEN DESIGN

NEW CONSTRUCTION
MERCER ISLAND 6427
6427 E MERCER WAY, MERCER ISLAND, WA 98040

City of MERCER ISLAND
PERMIT
June 18, 2025

PERMIT NUMBER

FOR PLANNING DEPT USE ONLY

SECTIONS AND ASSEMBLIES
SCALE: AS NOTED

A4.3

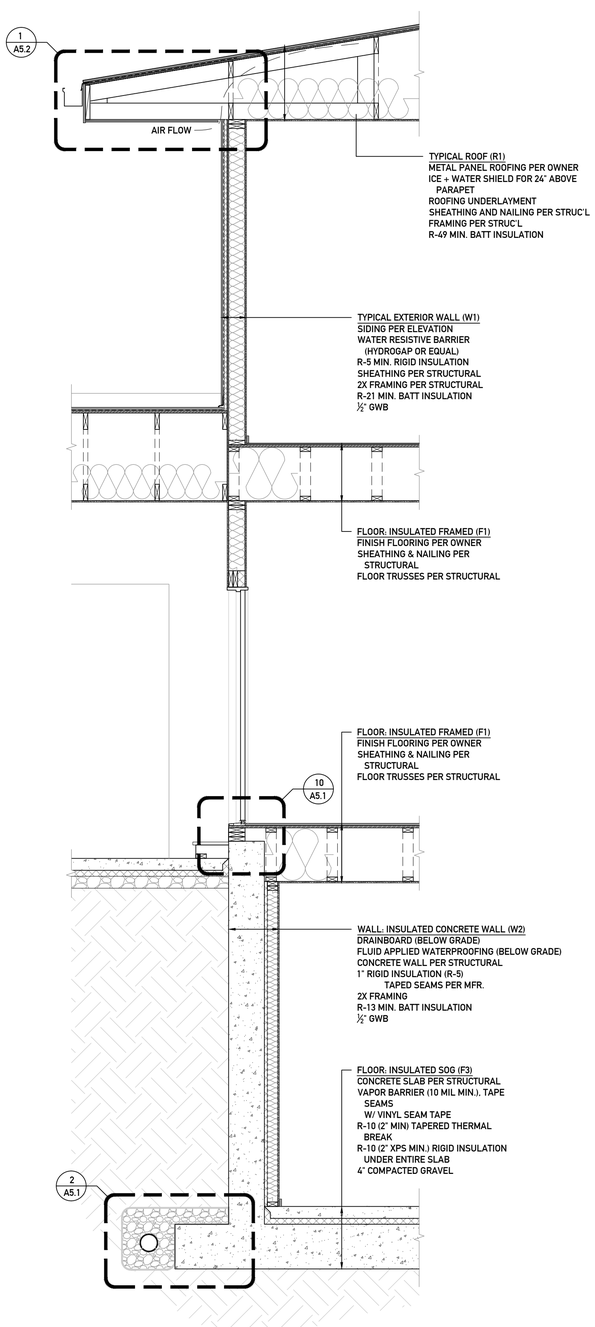

9 A4.10 **WALL SECTION**
SCALE: 1/2" = 1'-0"

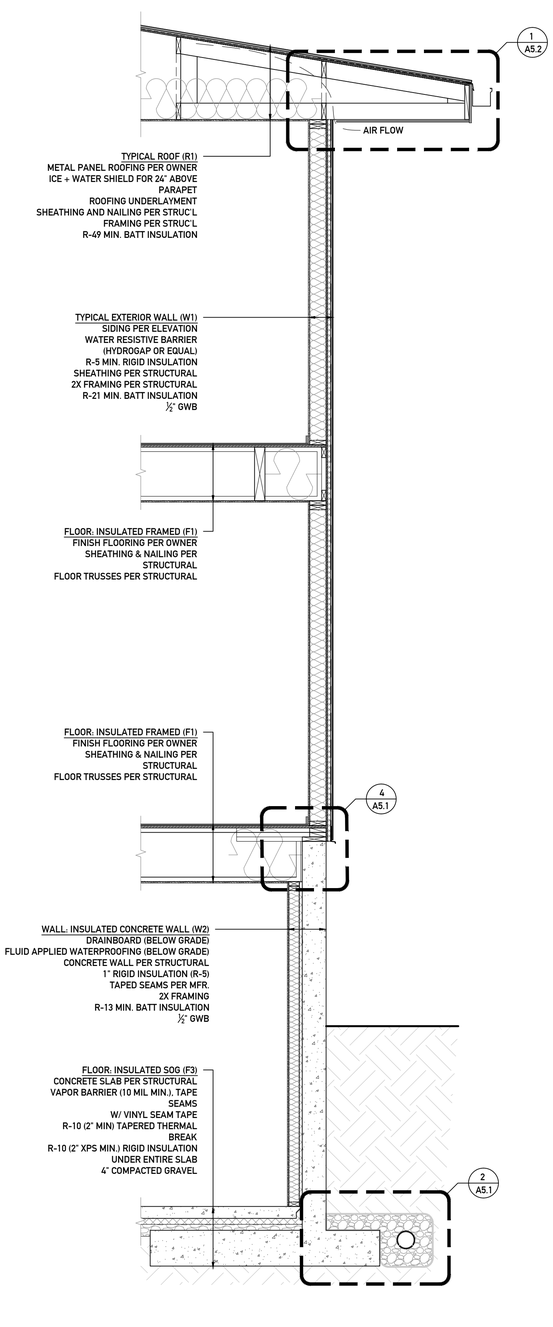

10 A4.10 **WALL SECTION**
SCALE: 1/2" = 1'-0"

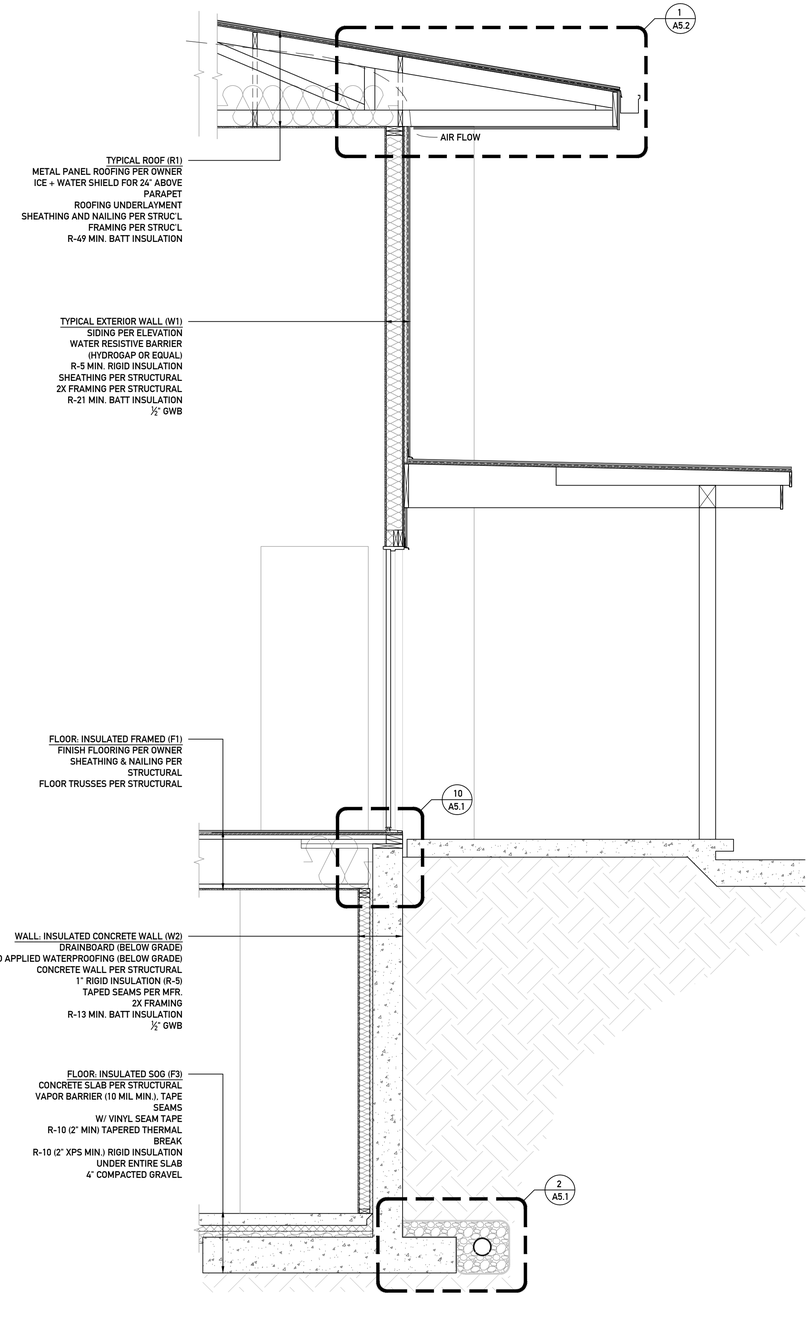

11 A4.10 **WALL SECTION**
SCALE: 1/2" = 1'-0"

ORIGINAL SHEET SIZE: 24" x 36"

CITIZEN DESIGN

NEW CONSTRUCTION
MERCER ISLAND 6427
6427 E MERCER WAY, MERCER ISLAND, WA 98040

City of MERCER ISLAND
PERMIT
June 18, 2025

PERMIT NUMBER

FOR PLANNING DEPT USE ONLY

WALL SECTIONS
SCALE: AS NOTED

A4.10

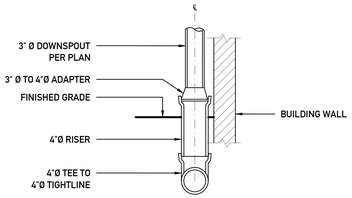

1 A5.1 **TYP. DOWNSPOUT CONNECTION**
SCALE: 1" = 1'-0"

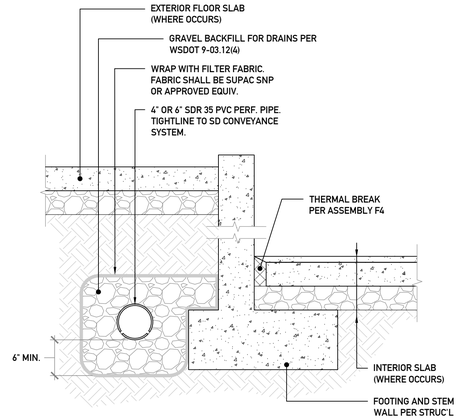

2 A5.1 **TYP. FOOTING DRAIN & THERMAL BR.**
SCALE: 1" = 1'-0"

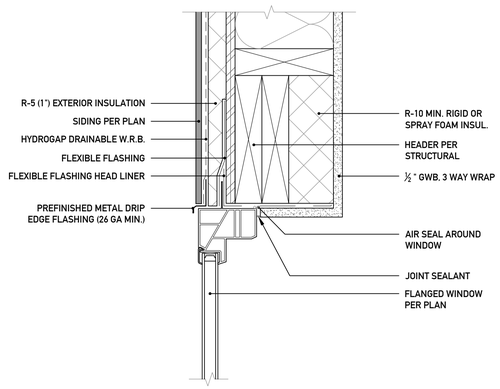

3 A5.1 **TYP. WINDOW HEAD**
SCALE: 3" = 1'-0"

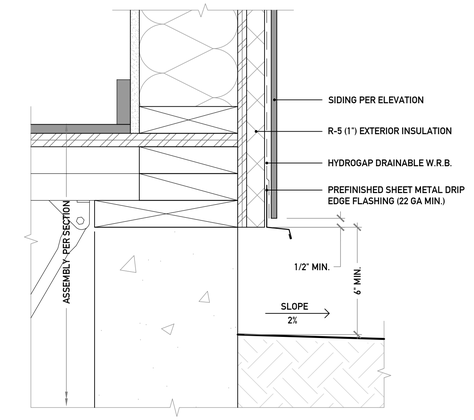

4 A5.1 **TYP. SIDING BASE**
SCALE: 3" = 1'-0"

5 A5.1 **TYP. WINDOW JAMB**
SCALE: 3" = 1'-0"

6 A5.1 **LOW CLEARANCE SIDING BASE**
SCALE: 3" = 1'-0"

7 A5.1 **TYP. INSIDE CORNER**
SCALE: 3" = 1'-0"

8 A5.1 **TYP. OUTSIDE CORNER**
SCALE: 3" = 1'-0"

9 A5.1 **TYP. WINDOW SILL**
SCALE: 3" = 1'-0"

10 A5.1 **TYP. DOOR SILL**
SCALE: 3" = 1'-0"

ORIGINAL SHEET SIZE: 24"x 36"

CITIZEN DESIGN

NEW CONSTRUCTION
MERCER ISLAND 6427
6427 E MERCER WAY, MERCER ISLAND, WA 98040

City of MERCER ISLAND
PERMIT
June 18, 2025

PERMIT NUMBER

FOR PLANNING DEPT USE ONLY

DETAILS
SCALE: AS NOTED
A5.1

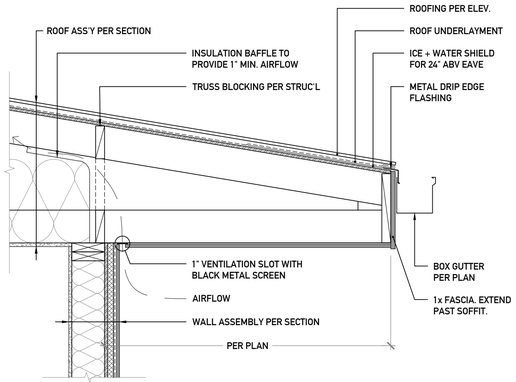

1 A5.2 **TYP. EAVE AND GUTTER**
SCALE: 1" = 1'-0"

NOTE:
GUARDRAIL TO BE DESIGN/BUILD BY OTHERS AND SATISFY THE FOLLOWING CRITERIA:
- TOP RAIL TO RESIST A 200 LB CONCENTRATED LOAD
- INFILL COMPONENTS TO RESIST A 50 LB LOAD DISTRIBUTED OVER A 12" x 12" AREA

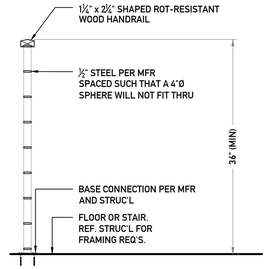

2 A5.2 **TYP. GUARDRAIL**
SCALE: 1" = 1'-0"

NOTE. HANDRAIL ENDS SHALL RETURN TO THE WALL OR TERMINATE IN NEWEL POSTS OR SAFETY TERMINALS.

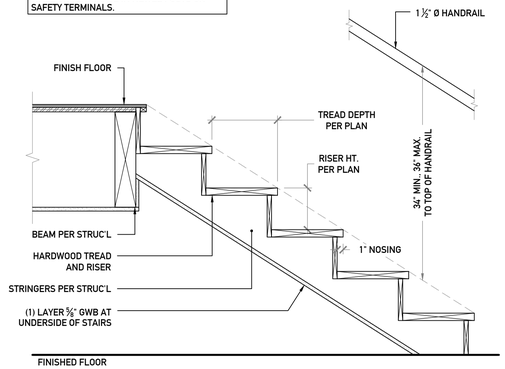

3 A5.2 **TYP. STAIR AND HANDRAIL**
SCALE: 1" = 1'-0"

ORIGINAL SHEET SIZE: 24"x 36"

CITIZEN DESIGN

NEW CONSTRUCTION
MERCER ISLAND 6427
6427 E MERCER WAY, MERCER ISLAND, WA 98040

City of MERCER ISLAND
PERMIT
June 18, 2025

PERMIT NUMBER

FOR PLANNING DEPT USE ONLY

DETAILS
SCALE: AS NOTED
A5.2

COPYRIGHT © 2025 MALSAM TSANG ENGINEERING CORPORATION - ALL RIGHTS RESERVED

GENERAL STRUCTURAL NOTES

THE FOLLOWING APPLY UNLESS SHOWN OTHERWISE ON THE DRAWINGS

CRITERIA

1. ALL MATERIALS, WORKMANSHIP, DESIGN, AND CONSTRUCTION SHALL CONFORM TO THE DRAWINGS, SPECIFICATIONS, AND THE INTERNATIONAL BUILDING CODE (IBC) 2021 EDITION.

2. DESIGN LOADING CRITERIA

FLOOR LIVE LOAD (RESIDENTIAL)		40 PSF
FLOOR LIVE LOAD (RESIDENTIAL DECKS AND BALCONIES)		60 PSF
SNOW		25 PSF
WIND		METHOD - DIRECTIONAL PROCEDURE
		Kzt=1.0, GCpi=0.18, 97 MPH (RISK CATEGORY II), EXPOSURE "C"
EARTHQUAKE	ANALYSIS PROCEDURE: EQUIVALENT LATERAL FORCE PROCEDURE LATERAL SYSTEM: LIGHT FRAMED SHEAR WALLS SDC D, SITE CLASS D, Ie=1.0, Ss=1.451, S1=0.502, Sds=0.967, Sd1=NULL, Cs=0.149, R=6.5, SEISMIC DESIGN BASE SHEAR Vsx=24.74 KIPS	

3. STRUCTURAL DRAWINGS SHALL BE USED IN CONJUNCTION WITH ARCHITECTURAL DRAWINGS FOR BIDDING AND CONSTRUCTION. CONTRACTOR SHALL VERIFY DIMENSIONS AND CONDITIONS FOR COMPATIBILITY AND SHALL NOTIFY ARCHITECT OF ANY DISCREPANCIES PRIOR TO CONSTRUCTION.

4. PRIMARY STRUCTURAL ELEMENTS NOT DIMENSIONED ON THE STRUCTURAL PLANS AND DETAILS SHALL BE LOCATED BY THE ARCHITECTURAL PLANS AND DETAILS. VERTICAL DIMENSION CONTROL IS DEFINED BY THE ARCHITECTURAL WALL SECTIONS, BUILDING SECTIONS, AND PLANS. DETAILING AND SHOP DRAWING PRODUCTION FOR STRUCTURAL ELEMENTS WILL REQUIRE DIMENSIONAL INFORMATION CONTAINED IN BOTH ARCHITECTURAL AND STRUCTURAL DRAWINGS.

5. CONTRACTOR SHALL PROVIDE TEMPORARY BRACING FOR THE STRUCTURE AND STRUCTURAL COMPONENTS UNTIL ALL FINAL CONNECTIONS HAVE BEEN COMPLETED IN ACCORDANCE WITH THE PLANS. CONFORM TO ASCE 37-14 "DESIGN LOADS ON STRUCTURES DURING CONSTRUCTION."

6. CONTRACTOR SHALL BE RESPONSIBLE FOR ALL SAFETY PRECAUTIONS AND THE METHODS, TECHNIQUES, SEQUENCES OR PROCEDURES REQUIRED TO PERFORM THE CONTRACTOR'S WORK. THE STRUCTURAL ENGINEER HAS NO OVERALL SUPERVISORY AUTHORITY OR ACTUAL AND/OR DIRECT RESPONSIBILITY FOR THE SPECIFIC WORKING CONDITIONS AT THE SITE AND/OR FOR ANY HAZARDS RESULTING FROM THE ACTIONS OF ANY TRADE CONTRACTOR. THE STRUCTURAL ENGINEER HAS NO DUTY TO INSPECT, SUPERVISE, NOTE, CORRECT, OR REPORT ANY HEALTH OR SAFETY DEFICIENCIES TO THE OWNER, CONTRACTORS, OR OTHER ENTITIES OR PERSONS AT THE PROJECT SITE.

7. CONTRACTOR-INITIATED CHANGES SHALL BE SUBMITTED IN WRITING TO THE ARCHITECT AND STRUCTURAL ENGINEER FOR APPROVAL PRIOR TO FABRICATION OR CONSTRUCTION. CHANGES SHOWN ON SHOP DRAWINGS ONLY WILL NOT SATISFY THIS REQUIREMENT.

8. DRAWINGS INDICATE GENERAL AND TYPICAL DETAILS OF CONSTRUCTION. WHERE CONDITIONS ARE NOT SPECIFICALLY INDICATED BUT ARE OF SIMILAR CHARACTER TO DETAILS SHOWN, SIMILAR DETAILS OF CONSTRUCTION SHALL BE USED, SUBJECT TO REVIEW AND APPROVAL BY THE ARCHITECT AND THE STRUCTURAL ENGINEER.

9. ALL STRUCTURAL SYSTEMS WHICH ARE TO BE COMPOSED OF COMPONENTS TO BE FIELD ERECTED SHALL BE SUPERVISED BY THE SUPPLIER DURING MANUFACTURING, DELIVERY, HANDLING, STORAGE, AND ERECTION IN ACCORDANCE WITH INSTRUCTIONS PREPARED BY THE SUPPLIER. MANUFACTURERS INSTALLATION INSTRUCTIONS SHALL BE AVAILABLE ON THE JOB SITE AT THE TIME OF INSPECTION FOR THE INSPECTORS USE AND REFERENCE.

GEOTECHNICAL

10. SUBGRADE PREPARATION INCLUDING DRAINAGE, EXCAVATION, COMPACTION, AND FILLING REQUIREMENTS SHALL CONFORM STRICTLY WITH RECOMMENDATIONS GIVEN IN THE SOILS REPORT OR AS DIRECTED BY THE SOILS ENGINEER. FOOTINGS SHALL BEAR ON SOLID UNDISTURBED EARTH AT LEAST 18" BELOW LOWEST ADJACENT FINISHED GRADE. FOOTING DEPTHS/ELEVATIONS SHOWN ON PLANS (OR IN DETAILS) ARE MINIMUM AND FOR GUIDANCE ONLY; THE ACTUAL ELEVATIONS OF FOOTINGS MUST BE ESTABLISHED BY THE CONTRACTOR IN THE FIELD WORKING WITH THE TESTING LAB AND SOILS ENGINEER. BACKFILL BEHIND ALL RETAINING WALLS WITH FREE DRAINING GRANULAR FILL AND PROVIDE FOR SUBSURFACE DRAINAGE AS NOTED IN THE SOILS REPORT.

ALLOWABLE SOIL PRESSURE	3000 PSF
LATERAL EARTH PRESSURE (RESTRAINED/UNRESTRAINED)	45 PCF/35 PCF
TRAFFIC SURCHARGE	70 PSF
SEISMIC SURCHARGE	9H
PASSIVE PRESSURE	300 PCF
COEFFICIENT OF FRICTION	0.4
3" DIAMETER STANDARD WEIGHT PIPE PILE CAPACITY	6 TONS

SOILS REPORT REFERENCE: GEOTECHNICAL ENGINEERING REPORT PROPOSED SINGLE FAMILY RESIDENCE 6427 EAST MERCER WAY, MERCER ISLAND, WASHINGTON, PREPARED BY PANGEO, INC, DATED MARCH 3, 2025, FILE NUMBER 25-036.100.

11. 3" DIAMETER STANDARD WEIGHT PIPE PILES SHALL BE DRIVEN TO REFUSAL AS DEFINED BY THE SOILS ENGINEER. PIPE PILES SHALL BE INSTALLED IN STRICT CONFORMANCE TO SOILS ENGINEER'S REQUIREMENTS. TESTING OF PILES SHALL BE ACCORDANCE WITH SOILS ENGINEER'S REQUIREMENTS AND AT A MINIMUM BE TESTED IN ACCORDANCE TO ASTM STANDARD D1143-81 FOR A MINIMUM OF (1)PILE OR 3% OF 3" DIAMETER PILES UP TO (5)PILES OF EACH SIZE MAXIMUM; USE OF THE QUICK LOAD TEST METHOD IN THE STANDARD IS THE MINIMUM REQUIRED. STEEL PIPE SHALL CONFORM TO ASTM 53, GRADE A OR B, Fy = 35 KSI. PILES SHALL BE DRIVEN IN NOMINAL SECTIONS AND CONNECTED WITH COMPRESSION FITTED SLEEVE COUPLERS. PIPE JOINTS SHOULD NOT BE WELDED TOGETHER. PILES SHALL BE PLACED WITHIN 3" OF SPECIFIED LOCATION. THE CONTRACTOR SHALL DETERMINE THE LOCATION OF ALL ADJACENT UNDERGROUND UTILITIES PRIOR TO DRIVING PILES.

CONCRETE

12. CONCRETE SHALL BE MIXED, PROPORTIONED, CONVEYED AND PLACED IN ACCORDANCE WITH ACI 318 AND ACI 301, INCLUDING TESTING PROCEDURES. CONCRETE SHALL ATTAIN A 28-DAY STRENGTH OF f'c = 3000 PSI. SLUMP OF CONCRETE SHALL NOT EXCEED 6". STRUCTURAL DESIGN IS BASED ON A CONCRETE STRENGTH OF f'c = 2500 PSI, THEREFORE NO CONCRETE STRENGTH TESTING REQUIRED. CONCRETE EXPOSURE CATEGORIES ARE F1, S0, W0, AND C1.

ALL CONCRETE WITH SURFACES EXPOSED TO STANDING WATER SHALL BE AIR-ENTRAINED WITH AN AIR-ENTRAINING AGENT CONFORMING TO ASTM C260. TOTAL AIR CONTENT FOR FROST-RESISTANT CONCRETE SHALL BE IN ACCORDANCE WITH ACI 318-19, TABLE 19.3.3.1.

13. REINFORCING STEEL SHALL CONFORM TO ASTM A615, GRADE 60, fy = 60 KSI. EXCEPTIONS: ANY BARS SPECIFICALLY SO NOTED ON THE DRAWINGS SHALL BE GRADE 40, fy = 40 KSI. WELDED WIRE WIRE FABRIC SHALL CONFORM TO ASTM A1064. SPIRAL REINFORCEMENT SHALL BE DEFORMED WIRE CONFORMING TO ASTM A615, GRADE 60, fy = 60 KSI.

14. DETAILING OF REINFORCING STEEL (INCLUDING HOOKS AND BENDS) SHALL BE IN ACCORDANCE WITH ACI 315-99 AND 318-19. LAP ALL CONTINUOUS REINFORCEMENT #6 AND SMALLER 48 BAR DIAMETERS OR 2'-0" MINIMUM. PROVIDE CORNER BARS AT ALL WALL AND FOOTING INTERSECTIONS. LAP CORNER BARS #5 AND SMALLER 48 BAR DIAMETERS OR 2'-0" MINIMUM. LAPS OF LARGER BARS SHALL BE MADE IN ACCORDANCE WITH ACI 318-19, CLASS B. LAP ADJACENT MATS OF WELDED WIRE FABRIC A MINIMUM OF 8" AT SIDES AND ENDS.

NO BARS PARTIALLY EMBEDDED IN HARDENED CONCRETE SHALL BE FIELD BENT UNLESS SPECIFICALLY SO DETAILED OR APPROVED BY THE STRUCTURAL ENGINEER.

Plotted by: tylerl
Plotted Date: Jun 12, 2025 - 8:12am

15. CONCRETE PROTECTION (COVER) FOR REINFORCING STEEL SHALL BE AS FOLLOWS:

FOOTINGS AND OTHER UNFORMED SURFACES CAST AGAINST AND PERMANENTLY EXPOSED TO EARTH	3"
FORMED SURFACES EXPOSED TO EARTH OR WEATHER (#6 BARS OR LARGER)	2"
FORMED SURFACES EXPOSED TO EARTH OR WEATHER (#5 BARS OR SMALLER)	1-1/2"
COLUMN TIES OR SPIRALS AND BEAM STIRRUPS	1-1/2"
SLABS AND WALLS (INT FACE)	GREATER OF BAR DIAMETER PLUS 1/8" OR 3/4"

ANCHORAGE

16. EPOXY-GROUTED ITEMS (THREADED RODS OR REINFORCING BAR) SPECIFIED ON THE DRAWINGS SHALL BE INSTALLED USING "SET-3G" EPOXY ADHESIVE AS MANUFACTURED BY THE SIMPSON STRONG TIE COMPANY. INSTALL IN STRICT ACCORDANCE WITH ICC-ES REPORT ESR-4057. SUBSTITUTIONS PROPOSED BY THE CONTRACTOR SHALL BE SUBMITTED FOR REVIEW WITH CURRENT ICC REPORTS INDICATING EQUIVALENT OR GREATER LOAD CAPACITIES. SPECIAL INSPECTION OF INSTALLATION IS REQUIRED. RODS SHALL BE ASTM A36, UNO.

17. HEAVY DUTY THREADED CONCRETE ANCHORS SPECIFIED ON THE DRAWINGS SHALL BE "TITEN HD SCREW ANCHOR" AS MANUFACTURED BY THE SIMPSON STRONG TIE COMPANY. INSTALL IN STRICT ACCORDANCE WITH ICC-ES REPORT ESR-2713 AND ESR-1056, INCLUDING MINIMUM EMBEDMENT AND EDGE DISTANCE REQUIREMENTS. SUBSTITUTIONS PROPOSED BY THE CONTRACTOR SHALL BE SUBMITTED FOR REVIEW WITH CURRENT ICC REPORTS INDICATING EQUIVALENT OR GREATER LOAD CAPACITIES. SPECIAL INSPECTION OF INSTALLATION IS REQUIRED.

18. EXPANSION BOLTS INTO CONCRETE AND CONCRETE MASONRY UNITS SHALL BE "STRONG-BOLT 2" ANCHORS AS MANUFACTURED BY THE SIMPSON STRONG TIE COMPANY. INSTALL IN STRICT CONFORMANCE TO ICC-ES REPORT ESR-3037 AND IAPMO-UES REPORT ER-240, INCLUDING MINIMUM EMBEDMENT AND EDGE DISTANCE REQUIREMENTS. SUBSTITUTIONS PROPOSED BY THE CONTRACTOR SHALL BE SUBMITTED FOR REVIEW WITH CURRENT ICC REPORTS INDICATING EQUIVALENT OR GREATER LOAD CAPACITIES. BOLTS INTO CONCRETE MASONRY OR BRICK MASONRY UNITS SHALL BE INTO FULLY GROUTED CELLS. SPECIAL INSPECTION OF INSTALLATION IS REQUIRED.

19. DRIVE PINS AND OTHER POWDER-ACTUATED FASTENERS SHALL BE LOW VELOCITY TYPE (PDPWL-300MG, 0.145" DIAMETER, UNO) AS MANUFACTURED BY THE SIMPSON STRONG TIE COMPANY OR AN APPROVED EQUIVALENT IN STRENGTH AND EMBEDMENT. INSTALL IN STRICT ACCORDANCE WITH ICC-ES REPORT ESR-2138. MINIMUM EMBEDMENT IN CONCRETE SHALL BE 1", UNO. MAINTAIN AT LEAST 3" TO NEAREST CONCRETE EDGE.

WOOD

20. ALL 2x LUMBER SHALL BE KILN DRIED OR MC-19, AND ALL LUMBER SHALL BE GRADED AND MARKED IN CONFORMANCE WITH WCLIB STANDARD GRADING RULES FOR WEST COAST LUMBER NO 17. FURNISH TO THE FOLLOWING MINIMUM STANDARDS:

JOISTS AND BEAMS	(2x AND 3x MEMBERS)	HEM-FIR NO 2 OR SPRUCE-PINE-FIR NO 2 MINIMUM BASE VALUE, Fb = 850 PSI
	(4x MEMBERS)	DOUGLAS FIR-LARCH NO 2 MINIMUM BASE VALUE, Fb = 900 PSI
BEAMS	(6x AND LARGER)	DOUGLAS FIR-LARCH NO 2 MINIMUM BASE VALUE, Fb = 875 PSI
POSTS	(4x MEMBERS)	DOUGLAS FIR-LARCH NO 2 MINIMUM BASE VALUE, Fc = 1350 PSI
	(6x AND LARGER)	DOUGLAS FIR-LARCH NO 2 MINIMUM BASE VALUE, Fc = 600 PSI
STUDS, PLATES AND MISC FRAMING		HEM-FIR NO 2 OR SPRUCE-PINE-FIR NO 2

21. GLUED LAMINATED MEMBERS SHALL BE FABRICATED IN CONFORMANCE WITH ASTM AND ANSI/AITC STANDARDS. EACH MEMBER SHALL BEAR AN AITC OR APA-EWS IDENTIFICATION MARK AND SHALL BE ACCOMPANIED BY AN AITC OR APA-EWS CERTIFICATE OF CONFORMANCE. ALL SIMPLE SPAN GLULAM BEAMS SHALL BE DOUGLAS FIR COMBINATION 24F-V4, Fb = 2400 PSI, Fv = 265 PSI, E = 1800 KSI, UNO. ALL CANTILEVER GLULAM BEAMS SHALL BE DOUGLAS FIR COMBINATION 24F-V8, Fb = 2400 PSI, Fv = 265 PSI, E = 1800 KSI, UNO. GLUED LAMINATED COLUMNS SHALL BE DOUGLAS FIR COMBINATION 3, L2D GRADE, Fc = 2300 PSI, Fb = 2000 PSI, E = 1900 KSI.

22. MANUFACTURED LUMBER, PSL, LVL, AND LSL, SHALL BE MANUFACTURED UNDER A PROCESS APPROVED BY THE NATIONAL RESEARCH BOARD. EACH PIECE SHALL BEAR A STAMP OR STAMPS NOTING THE NAME AND PLANT NUMBER OF THE MANUFACTURER, THE GRADE, THE NATIONAL RESEARCH BOARD NUMBER, AND THE QUALITY CONTROL AGENCY. ALL PSL, LVL, AND LSL LUMBER SHALL BE MANUFACTURED IN ACCORDANCE WITH ICC-ES REPORT ESR-1387 USING DOUGLAS FIR VENEER GLUED WITH A WATERPROOF ADHESIVE MEETING THE REQUIREMENTS OF ASTM D2559 WITH ALL GRAIN PARALLEL WITH THE LENGTH OF THE MEMBER. THE MEMBERS SHALL HAVE THE FOLLOWING MINIMUM PROPERTIES:

PSL (2.0E)	Fb = 2900 PSI	E = 2000 KSI	Fv = 290 PSI
LVL (2.0E)	Fb = 2600 PSI	E = 2000 KSI	Fv = 285 PSI
LSL (1.55E)	Fb = 2325 PSI	E = 1550 KSI	Fv = 310 PSI
LSL 1-1/4" RIM (1.3E)	Fb = 1700 PSI	E = 1300 KSI	Fv = 425 PSI
PSL COLUMN (1.8E)	Fc = 2500 PSI	E = 1800 KSI	Fv = 190 PSI

DESIGN SHOWN ON PLANS IS BASED ON LUMBER MANUFACTURED BY THE TRUS-JOIST CORPORATION. ALTERNATE MANUFACTURERS MAY BE USED SUBJECT TO REVIEW AND APPROVAL BY THE ARCHITECT AND STRUCTURAL ENGINEER. ALTERNATE JOIST HANGERS AND OTHER HARDWARE MAY BE SUBSTITUTED FOR ITEMS SHOWN PROVIDED THEY HAVE CURRENT ICC APPROVAL FOR EQUAL OR GREATER LOAD CAPACITIES. ALL JOIST HANGERS AND OTHER HARDWARE SHALL BE COMPATIBLE IN SIZE WITH MEMBERS PROVIDED.

MANUFACTURED LUMBER PRODUCTS SHALL BE INSTALLED WITH A MOISTURE CONTENT OF 12% OR LESS. THE CONTRACTOR SHALL MAKE PROVISIONS DURING CONSTRUCTION TO PREVENT THE MOISTURE CONTENT OF INSTALLED BEAMS FROM EXCEEDING 12%. EXCESSIVE DEFLECTIONS MAY OCCUR IF MOISTURE CONTENT EXCEEDS THIS VALUE.

23. PREFABRICATED PLYWOOD WEB JOIST DESIGN SHOWN ON PLANS IS BASED ON JOISTS MANUFACTURED BY THE TRUS-JOIST CORPORATION. ALTERNATE PLYWOOD WEB JOIST MANUFACTURERS MAY BE USED SUBJECT TO REVIEW AND APPROVAL BY THE ARCHITECT AND STRUCTURAL ENGINEER. ALTERNATE JOIST HANGERS AND OTHER HARDWARE MAY BE SUBSTITUTED FOR ITEMS SHOWN PROVIDED THEY HAVE CURRENT ICC APPROVAL FOR EQUAL OR GREATER LOAD CAPACITIES. ALL JOIST HANGERS AND OTHER HARDWARE SHALL BE COMPATIBLE IN SIZE WITH PLYWOOD WEB JOIST PROVIDED.

24. PLYWOOD SHEATHING SHALL BE GRADE C-D, EXTERIOR GLUE OR STRUCTURAL II, EXTERIOR GLUE IN CONFORMANCE WITH DOC PS-1 OR PS-2. ORIENTED STRAND BOARD OF EQUIVALENT THICKNESS, EXPOSURE RATING AND PANEL INDEX MAY BE USED IN LIEU OF PLYWOOD.

WALL SHEATHING SHALL BE 7/16" or 1/2" (NOMINAL) WITH SPAN RATING 24/0

FLOOR SHEATHING SHALL BE 3/4" T&G (NOMINAL) WITH SPAN RATING 48/24

WATERPROOF DECK SHEATHING SHALL BE 3/4" T&G (NOMINAL) WITH SPAN RATING 48/24

FLAT ROOF SHEATHING SHALL BE 3/4" T&G (NOMINAL) WITH SPAN RATING 48/24

ROOF SHEATHING SHALL BE 1/2" or 7/16" (NOMINAL) WITH SPAN RATING 32/16 FOR ROOFS WITH A PITCH GREATER THAN 2:12

REFER TO WOOD FRAMING NOTES BELOW FOR TYPICAL NAILING REQUIREMENTS.

25. ALL WOOD IN DIRECT CONTACT WITH CONCRETE OR MASONRY SHALL BE PRESSURE-TREATED WITH AN APPROVED PRESERVATIVE OR (2)LAYERS OF ASPHALT IMPREGNATED BUILDING PAPER SHALL BE PROVIDED BETWEEN UNTREATED WOOD AND CONCRETE OR MASONRY.

26. PRESSURE TREATED WOOD (INCLUDES PRESERVATIVE AND FIRE TREATED) SHALL BE TREATED PER AWPA STANDARDS. PRESSURE TREATED WOOD FOR ABOVE GROUND USE SHALL BE TREATED TO RETENTION OF 0.25 PCF. WOOD IN CONTINUOUS CONTACT WITH FRESH WATER OR SOIL SHALL BE TREATED TO A RETENTION OF 0.40 PCF. SODIUM BORATE (SBX) TREATED WOOD SHALL NOT BE USED WHERE EXPOSED TO WEATHER. FASTENERS AND TIMBER CONNECTORS WITHOUT AMMONIA IN DIRECT CONTACT WITH ACQ-A TO A RETENTION LEVEL OF 0.40 PCF), CBA-A (UP TO A RETENTION LEVEL OF 0.41 PCF), CA-B (UP TO A RETENTION LEVEL OF 0.21 PCF), SHALL BE G185 OR A185 HOT DIPPED OR CONTINUOUS HOT-GALVANIZED PER ASTM A653. FASTENERS AND TIMBER CONNECTORS WITH AMMONIA IN DIRECT CONTACT WITH ACQ-A (OVER A RETENTION LEVEL OF 0.40 PCF), CBA-A (OVER A RETENTION LEVEL OF 0.41 PCF), CA-B (OVER A RETENTION LEVEL OF 0.21 PCF), OR WITH ACZA TREATED WOOD SHALL BE TYPE 304 OR 316 STAINLESS STEEL.

27. TIMBER CONNECTORS CALLED OUT BY LETTERS AND NUMBERS SHALL BE "STRONG-TIE" BY SIMPSON COMPANY, AS SPECIFIED IN THEIR CATALOG NUMBER C-C-2024. EQUIVALENT DEVICES BY OTHER MANUFACTURERS MAY BE SUBSTITUTED, PROVIDED THEY HAVE CURRENT ICC APPROVAL FOR EQUAL OR GREATER LOAD CAPACITIES. PROVIDE NUMBER AND SIZE OF FASTENERS AS SPECIFIED BY MANUFACTURER. CONNECTORS SHALL BE INSTALLED IN ACCORDANCE WITH THE MANUFACTURER'S RECOMMENDATIONS.

ALL 2x JOISTS SHALL BE CONNECTED TO FLUSH BEAMS WITH "LUS" SERIES JOIST HANGERS. ALL TJI JOISTS SHALL BE CONNECTED TO FLUSH BEAMS WITH "IUS" SERIES JOIST HANGERS. ALL DOUBLE-JOISTS BEAMS SHALL BE CONNECTED TO FLUSH BEAMS WITH "MIU" SERIES JOIST HANGERS.

WHERE CONNECTOR STRAPS CONNECT (2)MEMBERS, PLACE ONE-HALF OF THE NAILS OR BOLTS IN EACH MEMBER.

ALL SHIMS SHALL BE SEASONED AND DRIED AND THE SAME GRADE (MINIMUM) AS MEMBERS CONNECTED.

28. WOOD FASTENERS

A. NAIL SIZES SPECIFIED ON DRAWINGS ARE BASED ON THE FOLLOWING SPECIFICATIONS:

SIZE	TYPE	LENGTH	SHANK Ø	HEAD Ø
8d	COMMON	2-1/2"	0.131"	0.281"
10d	GUN	3"	0.131"	0.281"
12d	GUN	3-1/4"	0.131"	0.281"
16d	BOX	3-1/2"	0.135"	0.344"

IF CONTRACTOR PROPOSES THE USE OF ALTERNATE NAILS, THEY SHALL SUBMIT NAIL SPECIFICATIONS TO THE STRUCTURAL ENGINEER (PRIOR TO CONSTRUCTION) FOR REVIEW AND APPROVAL.

NAILS - PLYWOOD (APA RATED SHEATHING) FASTENERS TO FRAMING SHALL BE DRIVEN FLUSH TO FACE OF SHEATHING WITH NO COUNTERSINKING PERMITTED.

B. ALL BOLTS IN WOOD MEMBERS SHALL CONFORM TO ASTM A307. PROVIDE WASHERS UNDER THE HEADS AND NUTS OF ALL BOLTS AND LAG BOLTS BEARING ON WOOD. INSTALLATION OF LAG SCREWS SHALL CONFORM TO THE NATIONAL DESIGN SPECIFICATION FOR WOOD CONSTRUCTION (2018 EDITION) WITH A LEAD BORE HOLE OF 60-70% OF THE SHANK DIAMETER. LEAD HOLES ARE NOT REQUIRED FOR 3/8" AND SMALLER LAG SCREWS. BOLT HOLES SHALL BE A MINIMUM OF 1/32" TO A MAXIMUM OF 1/16" LARGER THAN THE BOLT DIAMETER. HOLES SHALL BE ACCURATELY ALIGNED IN MAIN MEMBERS AND SIDE PLATES/MEMBERS. BOLTS SHALL NOT BE FORCIBLY DRIVEN.

C. SDS AND SDWS SCREWS CALLED OUT ON PLAN ARE TIMBER SCREWS MANUFACTURED BY SIMPSON STRONG-TIE COMPANY. SCREWS SHALL BE INSTALLED IN ACCORDANCE WITH THE MANUFACTURERS RECOMMENDATIONS. EQUIVALENT SCREWS BY OTHER MANUFACTURERS MAY BE SUBSTITUTED, PROVIDED THEY HAVE CURRENT ICC APPROVAL FOR EQUAL OR GREATER LOAD CAPACITIES. LAG SCREWS ARE NOT AN EQUIVALENT SUBSTITUTION.

29. WOOD FRAMING NOTES - THE FOLLOWING APPLY UNLESS NOTED OTHERWISE ON THE PLANS:

A. ALL WOOD FRAMING DETAILS NOT SHOWN OTHERWISE SHALL BE CONSTRUCTED TO THE MINIMUM STANDARDS OF THE IBC, THE AITC "TIMBER CONSTRUCTION MANUAL", AND THE AF&PA "NATIONAL DESIGN SPECIFICATION FOR WOOD CONSTRUCTION". MINIMUM NAILING, SHALL CONFORM TO TABLE 2304.10.2. OF THE IBC, UNO. COORDINATE THE SIZE AND LOCATION OF ALL OPENINGS WITH ARCHITECTURAL AND MECHANICAL DRAWINGS.

B. WALL FRAMING: REFER TO ARCHITECTURAL DRAWINGS FOR THE SIZE OF ALL WALLS. ALL STUDS SHALL BE SPACED AT 16"oc, UNO. (2)STUDS MINIMUM SHALL BE PROVIDED AT THE END OF ALL WALLS AND AT EACH SIDE OF ALL OPENINGS, AND AT BEAM OR HEADER BEARING LOCATIONS. (2)2x8 HEADERS SHALL BE PROVIDED OVER ALL OPENINGS IN STRUCTURAL WALLS, UNO. NAIL MULTI-MEMBER HEADERS WITH (2)ROWS 10d AT 12"oc. SOLID BLOCKING FOR WOOD COLUMNS SHALL BE PROVIDED THROUGH FLOORS TO SUPPORTS BELOW. PROVIDE CONTINUOUS SOLID BLOCKING AT MID-HEIGHT OF ALL STUD WALLS OVER 10'-0" IN HEIGHT.

ALL WALLS SHALL HAVE A SINGLE BOTTOM PLATE AND A DOUBLE TOP PLATE. END NAIL TOP PLATE AND BOTTOM PLATE TO EACH STUD WITH (3)10d NAILS. FACE NAIL DOUBLE TOP PLATES WITH 10d AT 12"oc AND LAP MINIMUM 4'-0" AT JOINTS AND PROVIDE (12)10d NAILS AT 4"oc EACH SIDE OF JOINT. AT TOP PLATE INTERSECTIONS PROVIDE (3)10d FACE NAILS.

ALL STUD WALLS SHALL HAVE THEIR LOWER WOOD PLATES ATTACHED TO WOOD FRAMING BELOW WITH (2)ROWS OF 12d NAILS AT 16"oc, OR ATTACHED TO CONCRETE BELOW WITH 5/8" DIAMETER ANCHOR BOLTS AT 4'-0"oc EMBEDDED 7" MINIMUM, UNO. THERE SHALL BE A MINIMUM OF (2)BOLTS PER PLATE SECTION WITH (1)BOLT LOCATED NOT MORE THAN 12" OR LESS THAN 4-1/2" FROM EACH END OF THE PLATE SECTION. INDIVIDUAL MEMBERS OF BUILT-UP POSTS SHALL BE NAILED TO EACH OTHER WITH (2)ROWS OF 10d AT 16"oc. UNLESS NOTED OTHERWISE, GYPSUM WALLBOARD SHALL BE FASTENED TO THE INTERIOR SURFACE OF ALL STUDS AND PLATES WITH #6 x 1-1/4" TYPE S OR W SCREWS AT 12"oc. UNLESS NOTED OTHERWISE, 7/16" OR 1/2" (NOMINAL) APA RATED SHEATHING (SPAN RATING 24/0) SHALL BE NAILED TO ALL EXTERIOR SURFACES WITH 8d NAILS AT 6"oc AT PANEL EDGES AND TOP AND BOTTOM PLATES (BLOCK UN-SUPPORTED EDGES) AND TO ALL INTERMEDIATE STUDS AND BLOCKING WITH 8d NAILS AT 12"oc. ALLOW 1/8" SPACING AT ALL PANEL EDGES AND PANEL ENDS.

C. FLOOR AND ROOF FRAMING: PROVIDE DOUBLE JOISTS UNDER ALL PARALLEL PARTITIONS THAT EXTEND OVER MORE THAN HALF THE JOIST LENGTH AND AROUND ALL OPENINGS IN FLOORS OR ROOFS, UNO. PROVIDE SOLID BLOCKING AT ALL BEARING POINTS. TOENAIL TIMBER JOISTS TO SUPPORTS WITH (3)10d NAILS AND NAIL TJI JOISTS TO SUPPORTS WITH (2)10d NAILS. ATTACH JOISTS TO BEAMS WITH SIMPSON JOIST HANGERS IN ACCORDANCE WITH NOTES ABOVE. NAIL ALL MULTI-JOIST BEAMS TOGETHER WITH (2)ROWS 10d AT 12"oc. TOENAIL RIM JOIST TO TOP PLATE WITH 10d AT 6"oc. TOENAIL BLOCKING BETWEEN JOISTS TO TOP PLATE WITH (3)10d NAILS.

UNLESS NOTED OTHERWISE ON THE PLANS, PLYWOOD ROOF AND FLOOR SHEATHING SHALL BE LAID UP WITH GRAIN PERPENDICULAR TO SUPPORTS WITH END JOINTS STAGGERED, AND NAILED AT 6"oc WITH 8d NAILS TO FRAMED PANEL EDGES, STRUTS AND OVER STUD WALLS AS SHOWN ON PLANS AND AT 12"oc TO INTERMEDIATE SUPPORTS. PROVIDE APPROVED PLYWOOD EDGE CLIPS CENTERED BETWEEN JOISTS/TRUSSES AT UNBLOCKED ROOF SHEATHING EDGES. ALL FLOOR SHEATHING EDGES SHALL HAVE APPROVED T&G JOINTS OR SHALL BE SUPPORTED WITH SOLID BLOCKING. ALLOW 1/8" SPACING AT ALL PANEL EDGES AND ENDS OF FLOOR AND ROOF SHEATHING. TOENAIL BLOCKING TO SUPPORTS WITH 10d AT 12"oc, UNO.

30. NOTCHES AND HOLES IN WOOD FRAMING:

A. SAWN LUMBER JOISTS AND RAFTERS: NOTCHES AT THE ENDS OF JOISTS SHALL NOT EXCEED 1/4 THE JOIST DEPTH. NOTCHES IN THE TOP OR BOTTOM OF JOISTS SHALL NOT EXCEED 1/6 THE JOIST DEPTH, BE LONGER THAN 1/3 THE JOIST DEPTH, OR BE LOCATED IN THE MIDDLE 1/3 OF THE SPAN. HOLES SHALL NOT BE WITHIN 2" OF THE TOP OR BOTTOM OF THE JOIST AND THE DIAMETER SHALL NOT EXCEED 1/3 THE JOIST DEPTH. SPACING BETWEEN HOLES SHALL BE A MINIMUM OF (2)TIMES THE DIAMETER OF THE LARGEST HOLE OR 2" AND SHALL BE LOCATED A MINIMUM OF 2" FROM ANY NOTCH.

B. EXTERIOR AND BEARING WALLS: WOOD STUDS ARE PERMITTED TO BE NOTCHED TO A DEPTH NOT EXCEEDING 1/4 OF ITS WIDTH. A HOLE NOT GREATER IN DIAMETER THAN 40% OF THE STUD WIDTH IS PERMITTED IN WOOD STUDS. HOLES SHALL NOT BE WITHIN 5/8" TO THE EDGE OF THE STUD. SPACING BETWEEN HOLES SHALL BE A MINIMUM OF (2)TIMES THE DIAMETER OF THE LARGEST HOLE OR 2" AND SHALL NOT BE LOCATED AT THE SAME SECTION AS A NOTCH.

C. CUTS, NOTCHES, AND HOLES IN MANUFACTURED LUMBER, PREFABRICATED PLYWOOD WEB JOISTS, AND PREFABRICATED TRUSSES ARE PROHIBITED EXCEPT WHERE NOTED ON STRUCTURAL PLANS OR PERMITTED BY MANUFACTURER'S RECOMMENDATIONS.

31. ELECTRICAL, MECHANICAL, PLUMBING, AND DRAINAGE SYSTEMS SHALL BE DESIGNED TO ACCOMMODATE THE DIFFERENTIAL SHRINKAGE OR MOVEMENT OF THE WOOD STRUCTURE (3/8" PER FLOOR).

⚠ 32. DEFLECTION OF CANTILEVERS SHALL BE CLOSELY MONITORED BY THE CONTRACTOR DURING CONSTRUCTION. CONTRACTOR TO VERIFY AND ENSURE ALL POST CAPS AND POST BEARING CONDITIONS ARE INSTALLED IN STRICT CONFORMANCE TO THE STRUCTURAL PLANS. CANTILEVERS IN WOOD FRAMING CAN DEFLECT UP TO 1/8" PER FOOT (I.E. 4' CANTILEVER MAY DEFLECT 1/2"). IF DEFLECTION EXCEEDS 1/8" PER FOOT NOTIFY STRUCTURAL ENGINEER IMMEDIATELY. BEFORE FINISHES ARE INSTALLED, FLOORS AT OR ABOVE CANTILEVERS MAY REQUIRE LEVELING COMPOUND AND SOFFITS FURRED TO MAKE THEM LEVEL.

33. PREFABRICATED CONNECTOR PLATE WOOD FLOOR TRUSSES SHALL BE DESIGNED BY THE MANUFACTURER IN ACCORDANCE WITH THE "NATIONAL DESIGN STANDARD FOR METAL PLATE-CONNECTED WOOD TRUSS CONSTRUCTION", ANSI/TPI 1 BY THE TRUSS PLATE INSTITUTE FOR THE SPANS AND CONDITIONS SHOWN ON THE PLANS. LOADING SHALL BE AS FOLLOWS:

TOP CHORD LIVE LOAD	40 PSF
TOP CHORD DEAD LOAD	10 PSF
BOTTOM CHORD DEAD LOAD	5 PSF
TOTAL LOAD	55 PSF

REFER TO PLAN FOR ADDITIONAL LOADING. ALL FLOOR TRUSSES SHALL BE DESIGNED FOR A MAXIMUM LIVE LOAD DEFLECTION OF THE SPAN DIVIDED BY 480.

WOOD TRUSSES SHALL UTILIZE APPROVED CONNECTOR PLATES (GANGNAIL OR EQUAL). SUBMIT SHOP DRAWINGS AND DESIGN CALCULATIONS TO THE ARCHITECT AND STRUCTURAL ENGINEER FOR REVIEW PRIOR TO FABRICATION. SUBMITTED DOCUMENTS SHALL BE STAMPED AND SIGNED BY A STRUCTURAL ENGINEER REGISTERED IN THE STATE OF WASHINGTON. PROVIDE FOR SHAPE BEARING POINTS, INTERSECTIONS, ETC, SHOWN ON THE DRAWINGS. PROVIDE ALL TRUSS TO TRUSS AND TRUSS TO GIRDER TRUSS CONNECTION DETAILS AND REQUIRED CONNECTION MATERIALS. PROVIDE FOR ALL TEMPORARY AND PERMANENT TRUSS BRACING AND BRIDGING.

34. PREFABRICATED CONNECTOR PLATE WOOD ROOF TRUSSES SHALL BE DESIGNED BY THE MANUFACTURER IN ACCORDANCE WITH THE "NATIONAL DESIGN STANDARD FOR METAL PLATE-CONNECTED WOOD TRUSS CONSTRUCTION", ANSI/TPI 1 BY THE TRUSS PLATE INSTITUTE FOR THE SPANS AND CONDITIONS SHOWN ON THE PLANS. LOADING SHALL BE AS FOLLOWS:

TOP CHORD LIVE LOAD	25 PSF
TOP CHORD DEAD LOAD	10 PSF
BOTTOM CHORD DEAD LOAD	5 PSF
TOTAL LOAD	40 PSF
WIND UPLIFT (TOP CHORD)	10 PSF
BOTTOM CHORD LIVE LOAD (BOTTOM CHORD LIVE LOAD DOES NOT ACT CONCURRENTLY WITH THE ROOF LIVE LOAD)	10 PSF

REFER TO PLAN FOR ADDITIONAL LOADING

TRUSSES SHALL BE DESIGNED TO NOT ALLOW LIMITED STORAGE PER IBC TABLE 1607.1. WEBS SHALL BE CONFIGURED SO THAT ALL OPENINGS ARE SMALLER THAN 24" WIDE x 42" HIGH.

WOOD TRUSSES SHALL UTILIZE APPROVED CONNECTOR PLATES (GANGNAIL OR EQUAL). SUBMIT SHOP DRAWINGS AND DESIGN CALCULATIONS TO THE ARCHITECT AND STRUCTURAL ENGINEER FOR REVIEW PRIOR TO FABRICATION. SUBMITTED DOCUMENTS SHALL BE STAMPED AND SIGNED BY A STRUCTURAL ENGINEER REGISTERED IN THE STATE OF WASHINGTON. PROVIDE FOR SHAPES, BEARING POINTS, INTERSECTIONS, HIPS, VALLEYS, ETC, SHOWN ON THE DRAWINGS. EXACT COMPOSITION OF SPECIAL HIP, VALLEY, AND INTERSECTION AREAS, USE OF GIRDER TRUSSES, JACK TRUSSES, STEP-DOWN TRUSSES, ROOF OVER-FRAMING, ETC SHALL BE DETERMINED BY THE MANUFACTURER UNLESS SPECIFICALLY INDICATED ON THE PLANS. PROVIDE ALL TRUSS TO TRUSS AND TRUSS TO GIRDER TRUSS CONNECTION DETAILS AND REQUIRED CONNECTION MATERIALS. PROVIDE FOR ALL TEMPORARY AND PERMANENT TRUSS BRACING AND BRIDGING.

FOR ABBREVIATIONS SEE 1/S3.0

MALSAM TSANG STRUCTURAL ENGINEERING
122 S JACKSON ST - SUITE 210
SEATTLE, WA 98104 - 206.789.6038

6427 E MERCER WAY
MERCER ISLAND, WA

PROJECT NO	0424.2025.01.01
PROJECT MANAGER	RAF
DRAWN	JAS
ENGINEER	JESSICA FORTIN 206.669.8709 JESSICAF@MALSAM-TSANG.COM

REV	DESCRIPTION	DATE
	PERMIT SET	6.12.25

ARCH	CITIZEN DESIGN 206.535.7908

GENERAL STRUCTURAL NOTES

S1.0

SCALE - NTS

COPYRIGHT © 2025 MALSAM TSANG ENGINEERING CORPORATION - ALL RIGHTS RESERVED

PIPE PILE NOTES

1. REFER TO GENERAL STRUCTURAL NOTES SHEET S1.0 FOR ADDITIONAL REQUIREMENTS.
2. REFER TO SOILS REPORT FOR ADDITIONAL PILE INSTALLATION REQUIREMENTS.
3. CONTRACTOR TO VERIFY ALL ELEVATIONS AND DIMENSIONS WITH ARCHITECTURAL DRAWINGS, SURVEY DRAWINGS, AND EXISTING SITE CONDITIONS.
4. DO NOT SCALE DRAWINGS. REFER TO ARCHITECTURAL DRAWINGS FOR ALL DIMENSIONS.

PILE SPECIFICATIONS

1. 3" DIAMETER STANDARD WEIGHT PIPE PILES SHALL BE DRIVEN TO REFUSAL. REFUSAL SHALL BE DEFINED AS LESS THAN 1" PENENTRATION IN 12 SECONDS DURING CONTINUOUS DRIVING OF A 600-LB HYDRAULIC HAMMER AS DEFINED BY GEOTECHNICAL ENGINEER.
2. PIPE PILES SHALL BE INSTALLED IN STRICT CONFORMANCE TO SOILS ENGINEER'S REQUIREMENTS. REQUIREMENTS. TESTING OF PILES SHALL BE ACCORDANCE WITH SOILS ENGINEER'S REQUIREMENTS AND AT A MINIMUM BE TESTED IN ACCORDANCE TO ASTM STANDARD D1143-81 FOR A MINIMUM OF (1)PILE OR 3% OF 3" DIAMETER PILES UP TO (5)PILES OF EACH SIZE MAXIMUM; USE OF THE QUICK LOAD TEST METHOD IN THE STANDARD IS THE MINIMUM REQUIRED.
3. GEOTECHNICAL SPECIAL INSPECTOR SHALL BE CONTINUOUSLY PRESENT DURING PIPE PILE INSTALLATION AND TESTING.
4. STEEL PIPE SHALL CONFORM TO ASTM A53, GRADE A OR B, Fy = 35 KSI. PILES SHALL BE DRIVEN IN NOMINAL SECTIONS AND CONNECTED WITH COMPRESSION FITTED SLEEVE COUPLERS. PIPE JOINTS ARE NOT ALLOWED TO BE WELDED TOGETHER.
5. PIPE PILES NEED TO BE PLACED WITHIN 3" OF SPECIFIED LOCATION. THE CONTRACTOR SHALL DETERMINE THE LOCATION OF ALL ADJACENT UNDERGROUND UTILITIES PRIOR TO DRIVING PILES.
6. PIPE PILES SHALL BE DRIVEN TO A MINIMUM EMBEDMENT OF 15' (MINIMUM OF 8' BELOW FINISHED BASEMENT).

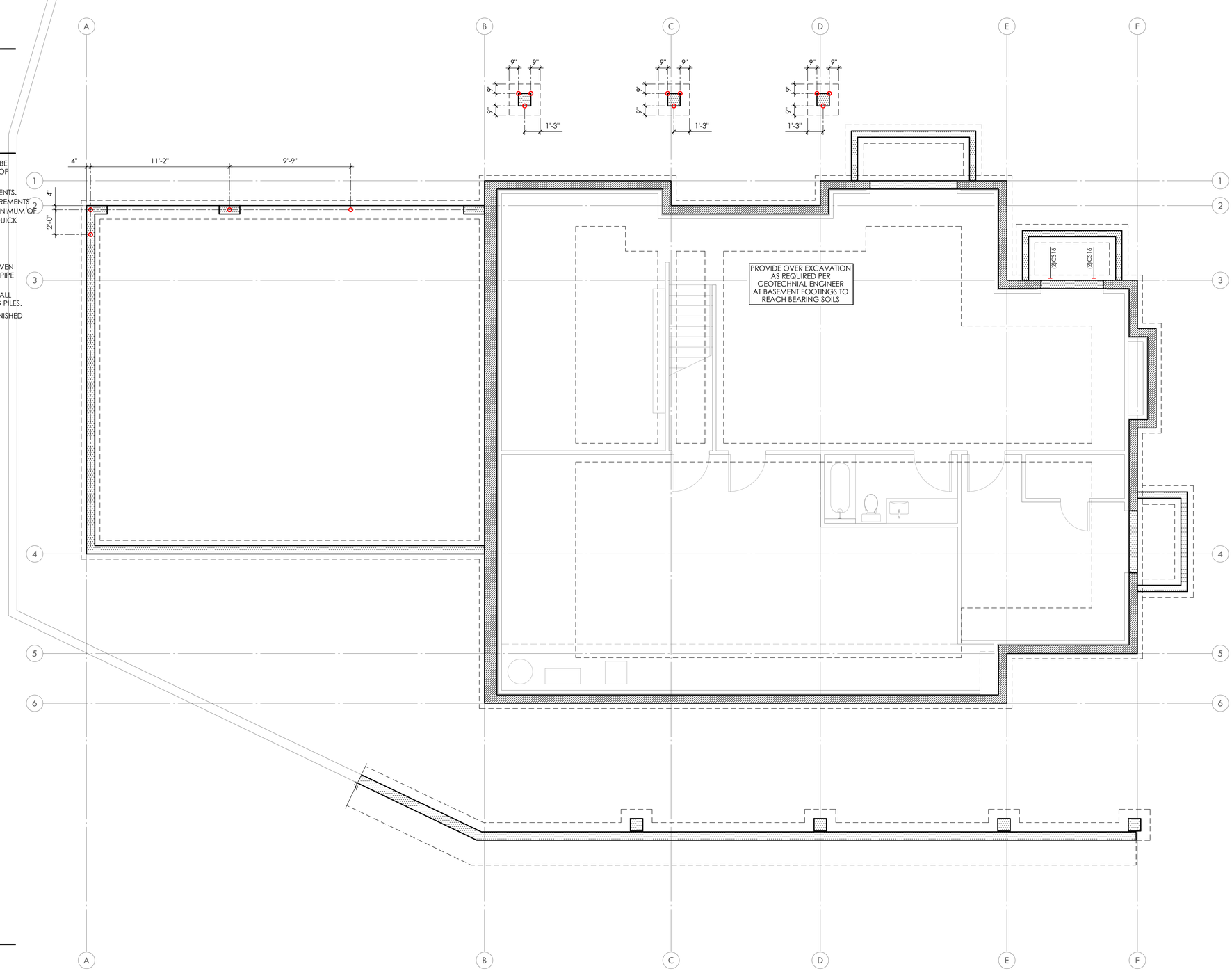

LEGEND

- 3"Ø STANDARD WEIGHT PILE (6-TON CAPACITY) REFER TO 2/S3.1 FOR EMBEDMENT INTO FOOTING

MATERIALS

- SAWN LUMBER
- TRUSSES
- ENGINEERED
- GLU-LAM
- STEEL MEMBER

PIN PILE PLAN

N

MALSAM TSANG STRUCTURAL ENGINEERING
122 S JACKSON ST - SUITE 210
SEATTLE, WA 98104 - 206.789.6038

6427 E MERCER WAY
MERCER ISLAND, WA

IVAN C. TSANG
STATE OF WASHINGTON
43968
REGISTERED
PROFESSIONAL ENGINEER

PROJECT NO	0424.2025.01.01
PROJECT MANAGER	RAF
DRAWN	JAS
ENGINEER	JESSICA FORTIN
	206.669.8709
	JESSICAF@MALSAM-TSANG.COM

REV	DESCRIPTION	DATE
	PERMIT SET	6.12.25

ARCH — CITIZEN DESIGN 206.535.7908

FOUNDATION PLAN
FRAMING PLAN

S2.0

SCALE - 1/4" = 1'-0"

Plotted By: YiHsi
Plotted Date: 6.12.2025 - 8:12am

COPYRIGHT © 2025 MALSAM TSANG ENGINEERING CORPORATION - ALL RIGHTS RESERVED

PLAN NOTES

1. BOTTOM OF ALL FOOTINGS SHALL BE 18" MINIMUM BELOW LOWEST ADJACENT GRADE, UNO.
2. SLAB ON GRADE SHALL BE 4" MINIMUM THICKNESS. REINFORCE WITH 6x6 W1.4 x W1.4 WWM CENTERED IN SLAB. PROVIDE RIGID INSULATION AT INTERIOR SPACES AND VAPOR BARRIER BELOW SLAB PER ARCHITECTURAL DRAWINGS OVER 4" MINIMUM FREE DRAINING GRAVEL OVER FIRM NATIVE SOILS OR STRUCTURAL FILL PER SOILS ENGINEER.
3. REFER TO SHEET S3.0 FOR TYPICAL FOUNDATION AND CONCRETE DETAILS.
4. STHD HOLDOWNS ARE DIMENSIONED TO THE CENTERLINE OF STRAP. HDU HOLDOWNS ARE DIMENSIONED TO THE CENTERLINE OF ANCHOR BOLT. DIMENSIONS ARE BASED OFF OF DRAWINGS PROVIDED BY THE ARCHITECT AND SHOULD BE VERIFIED.
5. REFER TO GENERAL STRUCTURAL NOTES SHEET S1.0 FOR ADDITIONAL REQUIREMENTS.
6. DO NOT SCALE DRAWINGS. REFER TO ARCHITECTURAL DRAWINGS FOR ALL DIMENSIONS.

FOOTING SCHEDULE

MARK	SIZE	REINFORCING
A	2'-6" SQ x 12" DP	(4)#4 EW BOT

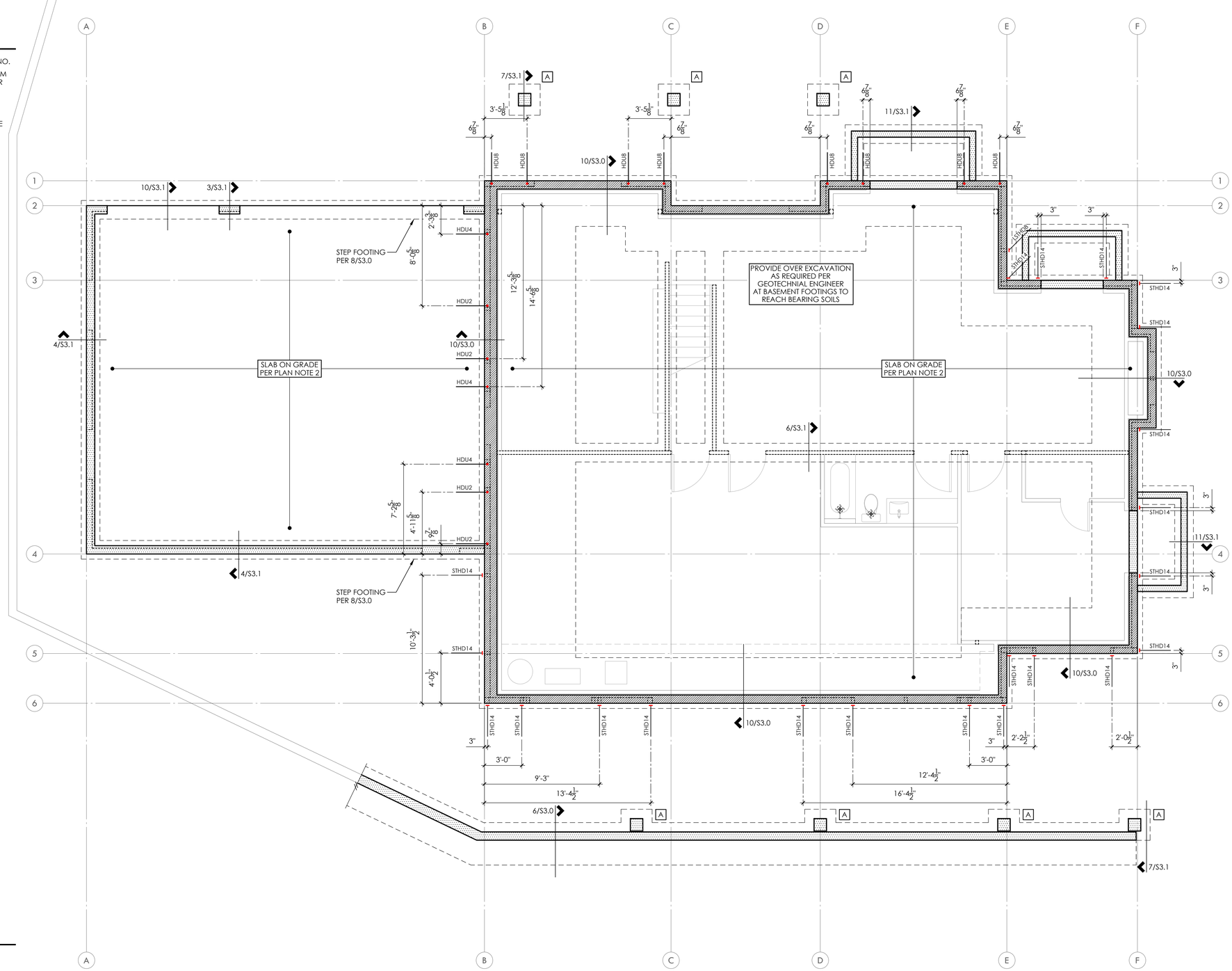

LEGEND

- CONCRETE WALL BELOW
- FULL HEIGHT CONCRETE WALL
- PLUMBING PENETRATION ABOVE

MATERIALS

- SAWN LUMBER
- TRUSSES
- ENGINEERED
- GLU-LAM
- STEEL MEMBER

FOUNDATION PLAN

BASEMENT WALLS SHOWN DASHED

N

MALSAM TSANG STRUCTURAL ENGINEERING
122 S JACKSON ST - SUITE 210
SEATTLE, WA 98104 - 206.789.6038

6427 E MERCER WAY
MERCER ISLAND, WA

IVAN C. TSANG — STATE OF WASHINGTON — 43968 — REGISTERED PROFESSIONAL ENGINEER

PROJECT NO	0424.2025.01.01
PROJECT MANAGER	RAF
DRAWN	JAS
ENGINEER	JESSICA FORTIN
	206.669.8709
	JESSICAF@MALSAM-TSANG.COM

REV	DESCRIPTION	DATE
	PERMIT SET	6.12.25

ARCH — CITIZEN DESIGN 206.535.7908

FOUNDATION PLAN

S2.1

SCALE - 1/4" = 1'-0"

Plotted By: YiHsi
Plotted Date: Jun 12, 2025 - 8:12am

COPYRIGHT © 2025 MALSAM TSANG ENGINEERING CORPORATION - ALL RIGHTS RESERVED

PLAN NOTES

1. TYPICAL FLOOR FRAMING CONSISTS OF 3/4" T&G APA RATED SHEATHING (SPAN RATING 48/24) OVER PRE-MANUFACTURED TRUSSES AT 24"oc, UNO. TRUSSES TO BE A MIN DEPTH OF 18".
2. GLUE AND NAIL FLOOR SHEATHING w/ 8d AT 6"oc AT FRAMED PANEL EDGES AND OVER SHEAR-WALLS AND AT 12"oc IN FIELD, UNO.
3. "SW_" INDICATES SHEARWALL BELOW FRAMING SHOWN. REFER TO SHEARWALL SCHEDULE ON 4/S4.0 FOR ADDITIONAL INFORMATION. ALL EXTERIOR WALLS ARE SW6, UNO.
4. ALL REQUIRED HEADERS ARE SHOWN ON PLAN AND SHALL BE (2)2x8, UNO. REFER TO DETAIL 8/S4.0 FOR ADDITIONAL REQUIREMENTS.
5. PROVIDE (2)BEARING (TRIMMER) STUDS AT EACH END OF ALL HEADERS AND BEAMS 6'-0" IN LENGTH AND OVER, UNO.
6. WHERE POSTS OCCUR, PROVIDE SOLID VERTICAL GRAIN BLOCKING THRU FLOOR TO MATCHING SUPPORTS BELOW, UNO.
7. TYPICAL WALL FRAMING CONSISTS OF 2x6's AT 16"oc AT EXTERIOR WALLS AND 2x4's or 2x6's AT 16"oc AT INTERIOR WALLS PER ARCH DRAWINGS, UNO.
8. REFER TO SHEET S4.0 FOR TYPICAL WOOD FRAMING DETAILS.
9. REFER TO GENERAL STRUCTURAL NOTES SHEET S1.0 FOR ADDITIONAL REQUIREMENTS.
10. DO NOT SCALE DRAWINGS. REFER TO ARCH DRAWINGS FOR ALL DIMENSIONS.

FLUSH BEAM SCHEDULE

MARK	SIZE①	BRG STUDS	HANGER
B1	GL 3-1/2 x 15	2	HHUS410②
B2	GL 5-1/2 x 15	2	HGUS5.50/10
B3	GL 3-1/2 x 18	2	HHUS410②
B4	GL 5-1/2 x 18	2	HGUS5.50/10
B5	GL 5-1/2 x 10-1/2	3	-

① ALL GLULAM BEAMS ARE 24F-V4 - UNO
② PROVIDE HUC410 WHERE REQUIRED - UNO

FOOTNOTES

① TRUSS MANUFACTURER TO DESIGN FOR A 400 LBS/FT LINE LOAD FOR STAIRS
② ALIGN w/ POST ABOVE

LEGEND

- CONCRETE WALL BELOW
- FULL HEIGHT CONCRETE WALL
- STRUCTURAL WALL ABOVE
- SPAN AND EXTENTS
- HEADER/BEAM BELOW FRAMING - TYP
- (x) NUMBER OF BUILT UP STUDS
- PLUMBING PENETRATION ABOVE
- HORIZ CS16 x 3'-0" - BEAM TO BEAM

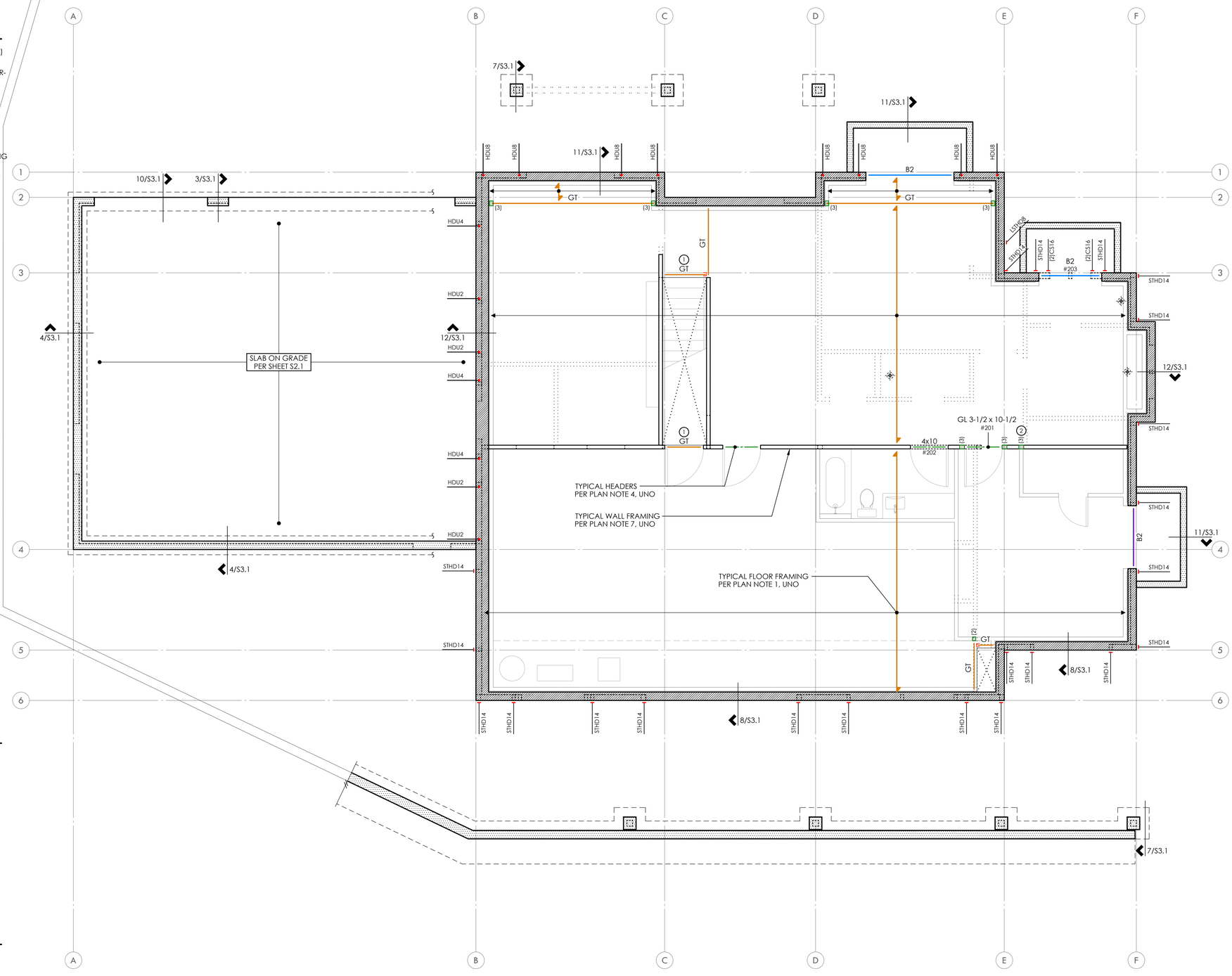

MATERIALS

- SAWN LUMBER
- TRUSSES
- ENGINEERED
- GLU-LAM
- STEEL MEMBER

MAIN FLOOR FRAMING PLAN

MAIN FLOOR WALLS SHOWN DASHED
BASEMENT WALLS SHOWN SOLID

N

MALSAM TSANG STRUCTURAL ENGINEERING
122 S JACKSON ST - SUITE 210
SEATTLE, WA 98104 - 206.789.6038

6427 E MERCER WAY
MERCER ISLAND, WA

IVAN C. TSANG — STATE OF WASHINGTON — 43968 — REGISTERED PROFESSIONAL ENGINEER

PROJECT NO	0424.2025.01.01
PROJECT MANAGER	RAF
DRAWN	JAS
ENGINEER	JESSICA FORTIN
	206.669.8709
	JESSICAF@MALSAM-TSANG.COM

REV	DESCRIPTION	DATE
	PERMIT SET	6.12.25

ARCH	CITIZEN DESIGN
	206.535.7908

MAIN FLOOR
FRAMING PLAN

S2.2
SCALE - 1/4" = 1'-0"

Printed by: rafael
Printed date: Jun 12, 2025 - 8:12am

COPYRIGHT © 2025 MALSAM TSANG ENGINEERING CORPORATION - ALL RIGHTS RESERVED

PLAN NOTES

1. TYPICAL FLOOR FRAMING CONSISTS OF 3/4" T&G APA RATED SHEATHING (SPAN RATING 48/24) OVER PRE-MANUFACTURED TRUSSES AT 24"oc, UNO. TRUSSES TO BE A MIN DEPTH OF 18".
2. GLUE AND NAIL FLOOR SHEATHING w/ 8d AT 6"oc AT FRAMED PANEL EDGES AND OVER SHEAR-WALLS AND AT 12"oc IN FIELD, UNO.
3. TYPICAL ROOF FRAMING CONSISTS OF 7/16" or 1/2" APA RATED SHEATHING (SPAN RATING 32/16) OVER PRE-MANUFACTURED TRUSSES AT 24"oc, UNO. PROVIDE H2.5A CLIPS EACH END OF ALL TRUSSES, AND H2.5A EACH SIDE OF ALL MULTIPLE TRUSSES, UNO. REFER TO ARCH DRAWINGS FOR TRUSS PROFILE.
4. NAIL ROOF SHEATHING w/ 8d AT 6"oc AT FRAMED PANEL EDGES AND OVER SHEARWALLS, AND AT 12"oc IN THE FIELD, UNO.
5. "SW_" INDICATES SHEARWALL BELOW FRAMING SHOWN. REFER TO SHEARWALL SCHEDULE ON 4/S4.0 FOR ADDITIONAL INFORMATION. ALL EXTERIOR WALLS ARE SW6, UNO.
6. ALL REQUIRED HEADERS ARE SHOWN ON PLAN AND SHALL BE (2)2x8, UNO. REFER TO DETAIL 8/S4.0 FOR ADDITIONAL REQUIREMENTS.
7. PROVIDE (2)BEARING (TRIMMER) STUDS AT EACH END OF ALL HEADERS, BEAMS, AND GIRDER TRUSSES 6'-0" IN LENGTH AND OVER, UNO.
8. WHERE POSTS OCCUR, PROVIDE SOLID VERTICAL GRAIN BLOCKING THRU FLOOR TO MATCHING SUPPORTS BELOW, UNO.
9. TYPICAL WALL FRAMING CONSISTS OF 2x6's AT 16"oc AT EXTERIOR WALLS AND 2x4's or 2x6's AT 16"oc AT INTERIOR WALLS PER ARCH DRAWINGS, UNO.
10. REFER TO SHEET S4.0 FOR TYPICAL WOOD FRAMING DETAILS.
11. REFER TO GENERAL STRUCTURAL NOTES SHEET S1.0 FOR ADDITIONAL REQUIREMENTS.
12. DO NOT SCALE DRAWINGS. REFER TO ARCH DRAWINGS FOR ALL DIMENSIONS.

FLUSH BEAM SCHEDULE

MARK	SIZE①	BRG STUDS	HANGER
B1	GL 3-1/2 x 15	2	HHUS410②
B2	GL 5-1/2 x 15	2	HGUS5.50/10
B3	GL 3-1/2 x 18	2	HHUS410②
B4	GL 5-1/2 x 18	2	HGUS5.50/10
B5	GL 5-1/2 x 10-1/2	3	-

① ALL GLULAM BEAMS ARE 24F-V4 - UNO
② PROVIDE HUC410 WHERE REQUIRED - UNO

FOOTNOTES

① PROVIDE 0.22"Ø x 6" SDWS TIMBER SCREWS AT 16"oc THRU DOUBLE TOP PLATE INTO BEAM
② CANOPY FRAMING CONSISTS OF 2x12's AT 24"oc - JOISTS MAY BE TAPERED TO A MIN DEPTH OF 7-1/2"
③ TRUSS MANUFACTURER TO DESIGN TRUSS TO TRANSFER 230 PLF LATERALLY FROM TOP TO BOTTOM CHORD
④ BEAMS TO BEAR DIRECTLY ON HEADER PER PLAN w/ CCQ CAP
⑤ GIRDER TRUSS BEARING POINT
⑥ TRUSS MANUFACTURER TO DESIGN FOR A 380 LBS/FT LINE LOAD FOR STAIRS
⑦ PROVIDE HORIZ CS16 AT HEADER AND SILL PER 11/S4.0

LEGEND

- STRUCTURAL WALL BELOW
- STRUCTURAL WALL ABOVE
- SPAN AND EXTENTS
- HEADER/BEAM BELOW FRAMING - TYP
- SLOPE DN — DIRECTION OF SLOPE
- (x) — NUMBER OF BUILT UP STUDS
- PLUMBING PENETRATION ABOVE
- * — HORIZ CS16 x 3'-0" - BEAM TO BEAM
- H — HTS30C - BEAM TO TOP PLATE
- DS — DRAG STRUT - NAIL THRU SHEATHING w/ 8d AT 4"oc INTO ENTIRE LENGTH OF MEMBER

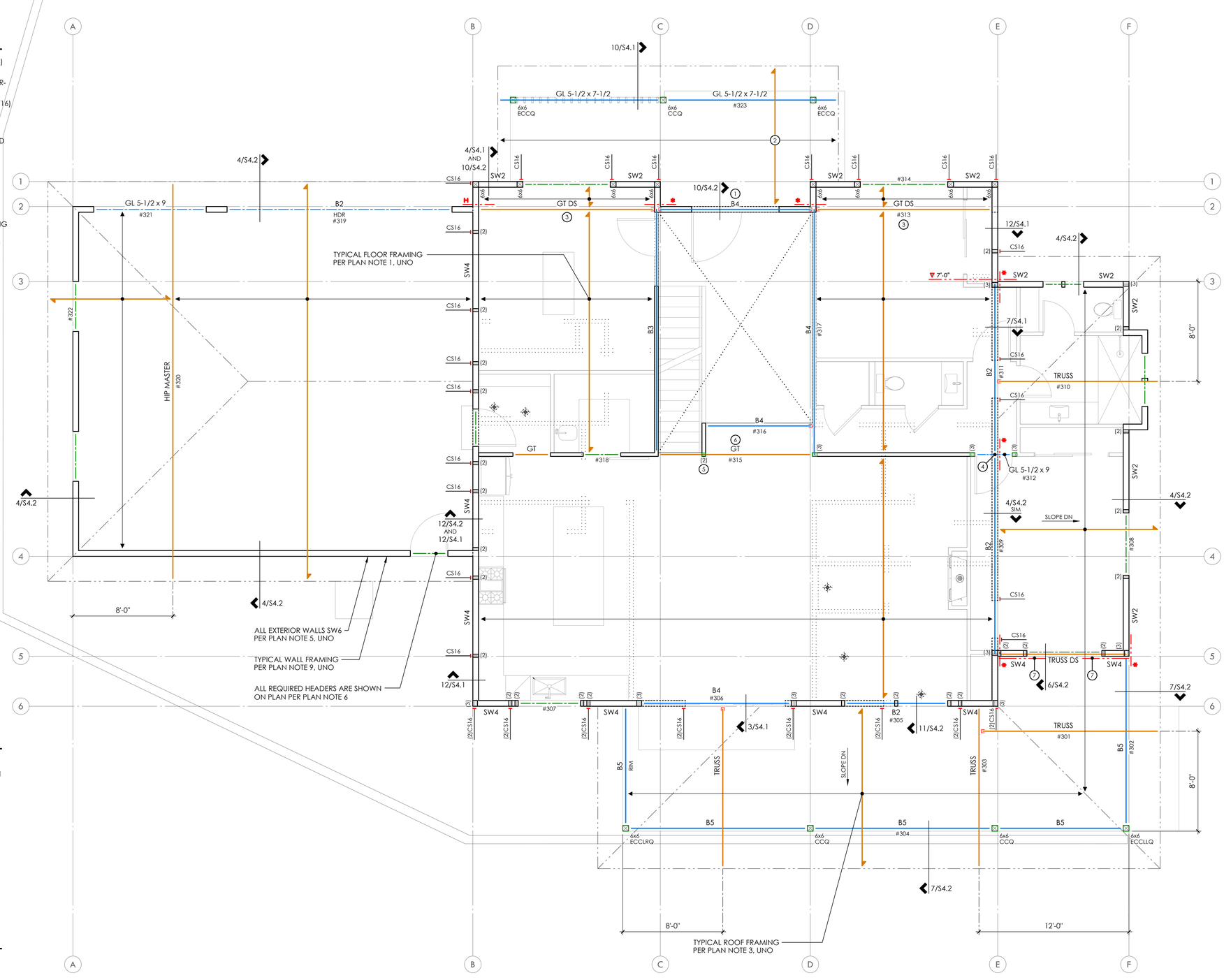

MATERIALS

- SAWN LUMBER
- TRUSSES
- ENGINEERED
- GLU-LAM
- STEEL MEMBER

SECOND FLOOR FRAMING PLAN

SECOND FLOOR WALLS SHOWN DASHED
MAIN FLOOR WALLS SHOWN SOLID

MALSAM TSANG STRUCTURAL ENGINEERING
122 S JACKSON ST - SUITE 210
SEATTLE, WA 98104 - 206.789.6038

6427 E MERCER WAY
MERCER ISLAND, WA

IVAN C. TSANG — STATE OF WASHINGTON — 43968 — REGISTERED PROFESSIONAL ENGINEER

PROJECT NO	0424.2025.01.01
PROJECT MANAGER	RAF
DRAWN	JAS
ENGINEER	JESSICA FORTIN 206.669.8709 JESSICAF@MALSAM-TSANG.COM

REV	DESCRIPTION	DATE
	PERMIT SET	6.12.25

ARCH — CITIZEN DESIGN 206.535.7908

SECOND FLOOR FRAMING PLAN

S2.3

SCALE - 1/4" = 1'-0"

Plotted by: rafael
Plotted Date: Jun 12, 2025 - 8:13am

COPYRIGHT © 2025 MALSAM TSANG ENGINEERING CORPORATION - ALL RIGHTS RESERVED

PLAN NOTES

1. TYPICAL ROOF FRAMING CONSISTS OF 7/16" or 1/2" APA RATED SHEATHING (SPAN RATING 32/16) OVER PRE-MANUFACTURED TRUSSES AT 24"oc, UNO. PROVIDE H2.5A CLIPS EACH END OF ALL TRUSSES, AND H2.5A EACH SIDE OF ALL MULTIPLE TRUSSES, UNO. REFER TO ARCH DRAWINGS FOR TRUSS PROFILE.
2. NAIL ROOF SHEATHING w/ 8d AT 6" oc AT FRAMED PANEL EDGES AND OVER SHEARWALLS, AND AT 12"oc IN FIELD, UNO.
3. "SW_" INDICATES SHEARWALL BELOW FRAMING SHOWN. REFER TO SHEARWALL SCHEDULE ON 4/S4.0 FOR ADDITIONAL INFORMATION. ALL EXTERIOR WALLS ARE SW6, UNO.
4. ALL REQUIRED HEADERS ARE SHOWN ON PLAN AND SHALL BE (2)2x8, UNO. REFER TO DETAIL 8/S4.0 FOR ADDITIONAL REQUIREMENTS.
5. PROVIDE (2)BEARING (TRIMMER) STUDS AT EACH END OF ALL HEADERS, BEAMS, AND GIRDER TRUSSES 6'-0" IN LENGTH AND OVER, UNO.
6. WHERE POSTS OCCUR, PROVIDE SOLID VERTICAL GRAIN BLOCKING THRU FLOOR TO MATCHING SUPPORTS BELOW, UNO.
7. TYPICAL WALL FRAMING CONSISTS OF 2x6's AT 16"oc AT EXTERIOR WALLS AND 2x4's or 2x6's AT 16"oc AT INTERIOR WALLS PER ARCH DRAWINGS, UNO.
8. REFER TO SHEET S4.0 FOR TYPICAL WOOD FRAMING DETAILS.
9. REFER TO GENERAL STRUCTURAL NOTES SHEET S1.0 FOR ADDITIONAL REQUIREMENTS.
10. DO NOT SCALE DRAWINGS. REFER TO ARCH DRAWINGS FOR ALL DIMENSIONS.

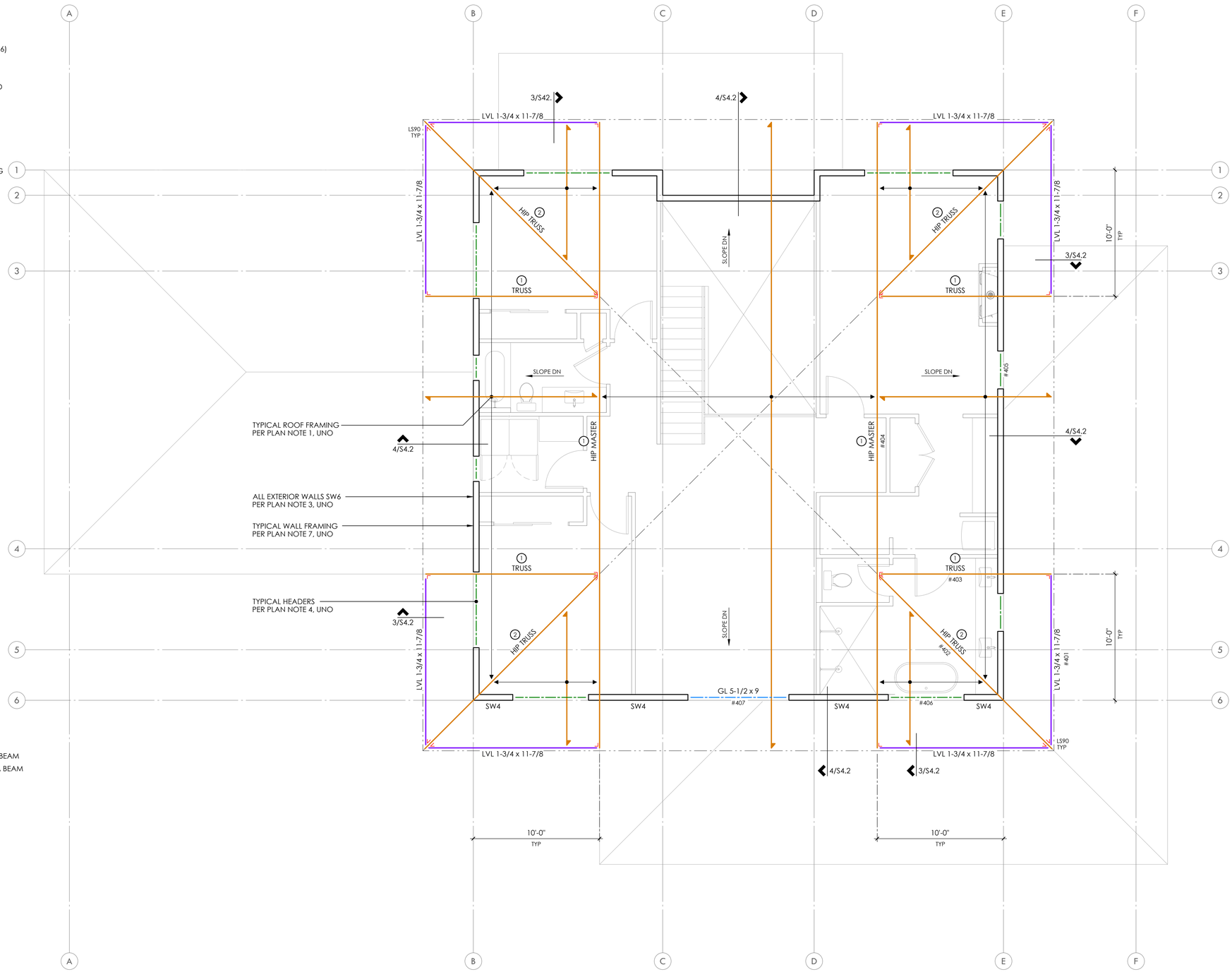

FOOTNOTES

① TRUSS MANUFACTURER TO DESIGN FOR A 600 LB POINT LOAD AT END OF TRUSS FOR FASCIA BEAM
② TRUSS MANUFACTURER TO DESIGN FOR A 1200 LB POINT LOAD AT END OF TRUSS FOR FASCIA BEAM

LEGEND

- STRUCTURAL WALL BELOW
- SPAN AND EXTENTS
- HEADER/BEAM BELOW FRAMING - TYP
- SLOPE DN — DIRECTION OF SLOPE
- (x) — NUMBER OF BUILT UP STUDS

MATERIALS

- SAWN LUMBER
- TRUSSES
- ENGINEERED
- GLU-LAM
- STEEL MEMBER

ROOF FRAMING PLAN

SECOND FLOOR WALLS SHOWN SOLID

N

MALSAM TSANG STRUCTURAL ENGINEERING
122 S JACKSON ST - SUITE 210
SEATTLE, WA 98104 - 206.789.6038

6427 E MERCER WAY
MERCER ISLAND, WA

PROJECT NO	0424.2025.01.01
PROJECT MANAGER	RAF
DRAWN	JAS
ENGINEER	JESSICA FORTIN
	206.669.8709
	JESSICAF@MALSAM-TSANG.COM

REV	DESCRIPTION	DATE
	PERMIT SET	6.12.25

ARCH — CITIZEN DESIGN 206.535.7908

ROOF FRAMING PLAN

S2.4

SCALE - 1/4" = 1'-0"

Plotted By: rafer
Plotted Date: Jun 12, 2025 - 8:13am

COPYRIGHT © 2025 MALSAM TSANG ENGINEERING CORPORATION - ALL RIGHTS RESERVED

ABBREVIATIONS

±	PLUS OR MINUS	GL	GLUE LAMINATED TIMBER	OSB	ORIENTED STRAND BOARD
Ø	DIAMETER	GR	GRADE	PLF	POUNDS PER LINEAR FOOT
AB	ANCHOR BOLT	GT	GIRDER TRUSS	PLY	PLYWOOD
ADDL	ADDITIONAL	GWB	GYPSUM WALLBOARD	PREFAB	PREFABRICATED
ALT	ALTERNATE	HD	HOLDOWN	PSF	POUNDS PER SQUARE FOOT
APPROX	APPROXIMATE	HDR	HEADER	PSI	POUNDS PER SQUARE INCH
ARCH	ARCHITECT, ARCHITECTURAL	HF	HEM FIR	PSL	PARALLEL STRAND LUMBER
BLKG	BLOCKING	HGR	HANGER	PT	PRESSURE TREATED LUMBER
BM	BEAM	HM	HIP MASTER	REINF	REINFORCING
BOE	BOTTOM OF EXCAVATION	HORIZ	HORIZONTAL	REQD	REQUIRED
BOT	BOTTOM	HT	HEIGHT	SOG	SLAB ON GRADE
℄	CENTERLINE	IBC	INTERNATIONAL BUILDING CODE	SQ	SQUARE
CLR	CLEARANCE	INT	INTERIOR	STD	STANDARD
CONT	CONTINUOUS	IRC	INTERNATIONAL RESIDENTIAL CODE	SW	SHEARWALL
DBL	DOUBLE	JST	JOIST	T&G	TONGUE AND GROOVE
DF	DOUGLAS FIR	K	KIPS (1000 LBS)	THRD	THREADED
DP	DEEP, DEPTH	KP	KING POST	TPL	TRIPLE
DN	DOWN	L	LENGTH	TRANSV	TRANSVERSE
DS	DRAG STRUT	LBS	POUNDS	TYP	TYPICAL
DWGS	DRAWINGS	LONG	LONGITUDINAL	UNO	UNLESS NOTED OTHERWISE
(E)	EXISTING	LSL	LAMINATED STRUCTURAL LUMBER	VERT	VERTICAL
EA	EACH	LVL	LAMINATED VENEER LUMBER	W	WIDE OR WIDTH
EMBED	EMBEDMENT	MAX	MAXIMUM	w/	WITH
EQ	EQUAL	MB	MACHINE BOLT	w/o	WITHOUT
EQUIV	EQUIVALENT	MFR	MANUFACTURER	WHS	WELDED HEADED STUD
EW	EACH WAY	MIN	MINIMUM	WTS	WELDED THREADED STUD
EXP	EXPANSION	MISC	MISCELLANEOUS	WWM	WELDED WIRE MESH
EXT	EXTERIOR	NO	NUMBER		
FDN	FOUNDATION	NTS	NOT TO SCALE		
FRMG	FRAMING	oc	ON CENTER		
FT	FEET	OPP	OPPOSITE		
FTG	FOOTING				
GA	GAUGE				
GALV	GALVANIZED				

1

2

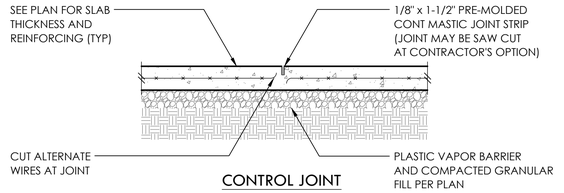

NOTE:

PROVIDE CONTROL OR CONSTRUCTION JOINTS IN SLABS ON GRADE TO BREAK UP SLAB INTO RECTANGULAR AREAS OF 200 SQUARE FEET OR LESS. AREAS TO BE APPROX SQUARE AND HAVE NO ACUTE ANGLES. JOINT LOCATIONS TO BE APPROVED BY THE ARCHITECT.

TYPICAL SLAB JOINTS 3

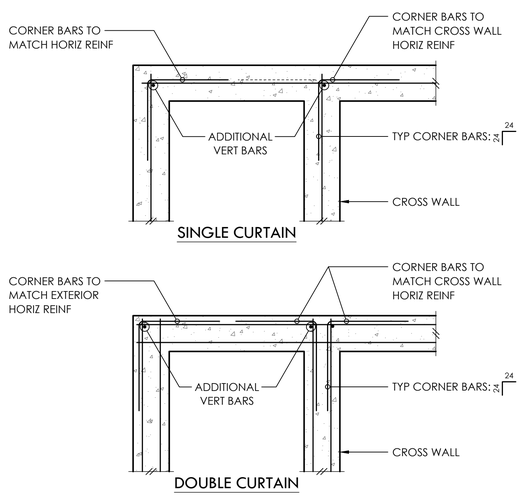

TYP CORNER BARS AT CONCRETE WALLS AND FTGS 4

MALSAM TSANG STRUCTURAL ENGINEERING
122 S JACKSON ST - SUITE 210
SEATTLE, WA 98104 - 206.789.6038

6427 E MERCER WAY
MERCER ISLAND, WA

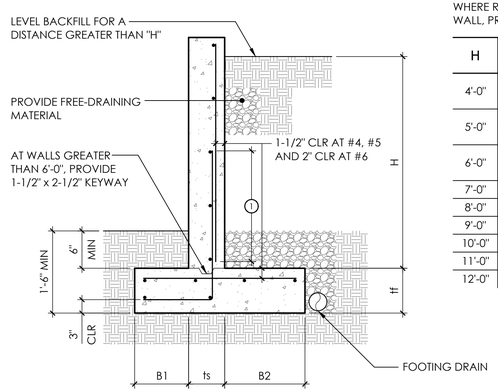

1 LAP SPLICE - #4 = 32", #5 = 40", #6 = 48"

RETAINING WALL SCHEDULE 6

NOTE:

WHERE RETAINED SOIL SUPPORTS A DRIVE SURFACE WITHIN A DISTANCE 'H' FROM THE FACE OF CONCRETE WALL, PROVIDE FOOTING, WALL, AND REINFORCING FOR A WALL 2'-0" HIGHER THAN ACTUAL 'H'(H+2)

H	B1	ts	B2	tf	STEM REINF		FOOTING REINF	
					VERT	HORIZ	TOP	LONG
4'-0"	6"	6"	1'-3"	9"	#4 AT 18"oc	#4 AT 16"oc	-	(3)#4
	6"	8"	1'-0"	9"	#4 AT 18"oc	#4 AT 12"oc	-	(3)#4
5'-0"	6"	6"	2'-0"	10"	#4 AT 18"oc	#4 AT 16"oc	-	(4)#4
	6"	8"	2'-0"	10"	#4 AT 12"oc	#4 AT 12"oc	-	(4)#4
6'-0"	9"	6"	2'-6"	10"	#4 AT 11"oc	#4 AT 16"oc	#4 AT 11"oc	(5)#4
	9"	8"	2'-3"	10"	#4 AT 12"oc	#4 AT 12"oc	#4 AT 11"oc	(5)#4
7'-0"	1'-3"	8"	2'-9"	10"	#4 AT 10"oc	#4 AT 12"oc	#4 AT 11"oc	(6)#4
8'-0"	1'-3"	8"	3'-6"	12"	#5 AT 11"oc	#4 AT 12"oc	#5 AT 14"oc	(5)#5
9'-0"	1'-6"	8"	4'-0"	12"	#5 AT 8"oc	#4 AT 12"oc	#5 AT 14"oc	(6)#5
10'-0"	1'-9"	8"	4'-6"	15"	#6 AT 8"oc	#4 AT 12"oc	#5 AT 11"oc	(8)#5
11'-0"	2'-0"	10"	5'-0"	15"	#6 AT 8"oc	#4 AT 10"oc	#5 AT 11"oc	(9)#5
12'-0"	2'-3"	12"	5'-3"	15"	#6 AT 8"oc	#5 AT 12"oc	#5 AT 10"oc	(9)#5

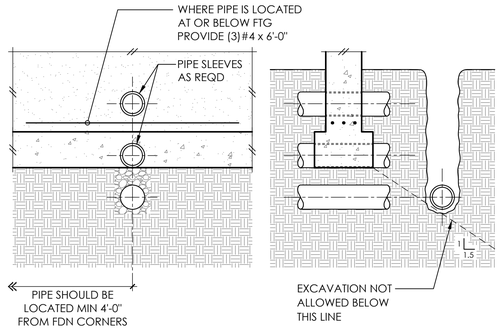

PIPE AND TRENCH LOCATIONS 7

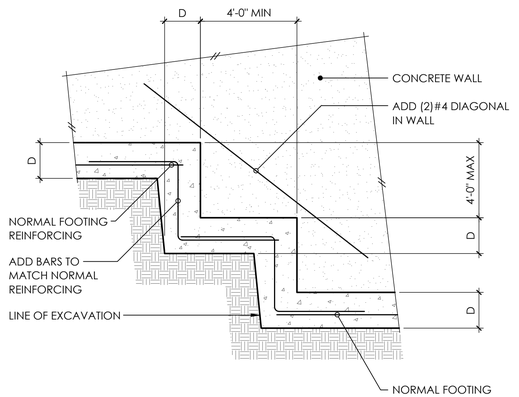

TYPICAL STEPPED FOOTING 8

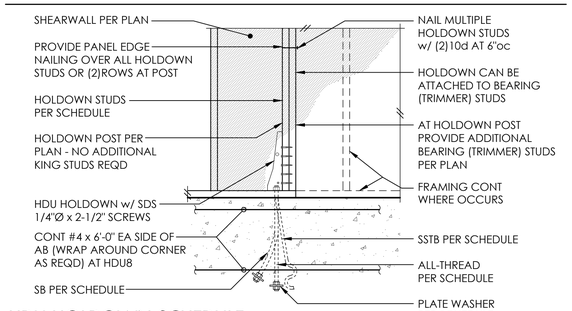

HDU HOLDOWN SCHEDULE

PLAN	AT STEMWALL		AT FOOTING①②			HD POST③	
MARK	AB	EMBED	ALL-THREAD	WASHER	EMBED	4x WALL	6x WALL
HDU2	5/8"Ø - SSTB16(L)	12-5/8"	5/8"Ø	1-3/4"SQ x 1/2	9"	(2)2x4	(2)2x6
HDU4	5/8"Ø - SB5/8 x 24	18"	5/8"Ø	1-3/4"SQ x 1/2	9"	(2)2x4	(2)2x6
HDU5	5/8"Ø - SB5/8 x 24	18"	5/8"Ø	1-3/4"SQ x 1/2	9"	(2)2x4	(2)2x6
HDU8	7/8"Ø - SB7/8 x 24	18"	7/8"Ø	2-1/2"SQ x 1/2	12"	4x6	6x6

① ALL HOLDOWN ANCHOR BOLTS THAT NEED TO BE EMBEDDED INTO FOOTING ARE SPECIFICALLY SHOWN ON PLAN
② A307 ALL-THRD w/ PLATE WASHER PER SCHEDULE AND DOUBLE NUT BOT OR EQUIVALENT SIMPSON PAB
③ MINIMUM SIZE OF POST UNO ON FRAMING PLANS

11

LSTHD/STHD HOLDOWN SCHEDULE

PLAN MARK	NAILS①	HD POST②
LSTHD8(RJ)	(20)16d SINKERS	DBL STUD
STHD10(RJ)	(28)16d SINKERS	DBL STUD
STHD14(RJ)	(30)16d SINKERS	DBL STUD

① 16d SINKERS = 0.148"Ø x 3-1/4"
② MINIMUM SIZE OF POST UNO ON FRAMING PLANS

12

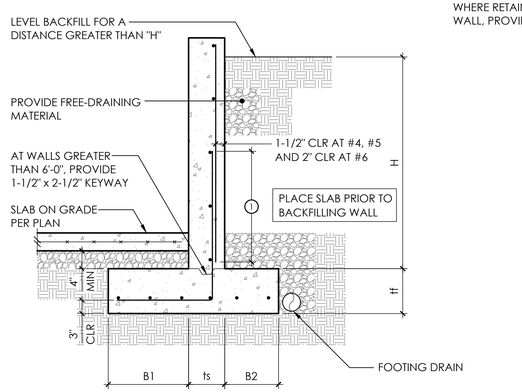

1 LAP SPLICE - #4 = 32", #5 = 40", #6 = 48"

RETAINING WALL SCHEDULE w/ SLAB 10

NOTE:

WHERE RETAINED SOIL SUPPORTS A DRIVE SURFACE WITHIN A DISTANCE 'H' FROM THE FACE OF CONCRETE WALL, PROVIDE FOOTING, WALL, AND REINFORCING FOR A WALL 2'-0" HIGHER THAN ACTUAL 'H'(H+2)

H	B1	ts	B2	tf	STEM REINF		FTG REINF
					VERT	HORIZ	LONG
4'-0"	1'-0"	6"	9"	9"	#4 AT 18"oc	#4 AT 16"oc	(3)#4
	1'-3"	8"	5"	9"	#4 AT 18"oc	#4 AT 12"oc	(3)#4
5'-0"	1'-9"	6"	9"	10"	#4 AT 11"oc	#4 AT 16"oc	(4)#4
	1'-6"	8"	9"	10"	#4 AT 11"oc	#4 AT 12"oc	(4)#4
6'-0"	2'-3"	6"	9"	10"	#4 AT 11"oc	#4 AT 16"oc	(4)#4
	2'-0"	8"	9"	10"	#4 AT 11"oc	#4 AT 12"oc	(4)#4
7'-0"	2'-9"	8"	9"	10"	#4 AT 9"oc	#4 AT 12"oc	(5)#4
8'-0"	3'-3"	8"	1'-0"	12"	#5 AT 11"oc	#4 AT 12"oc	(5)#5
9'-0"	3'-6"	8"	1'-3"	12"	#5 AT 8"oc	#4 AT 12"oc	(5)#5
10'-0"	4'-3"	8"	1'-6"	15"	#6 AT 8"oc	#4 AT 12"oc	(7)#5
11'-0"	4'-9"	10"	1'-6"	15"	#6 AT 8"oc	#4 AT 10"oc	(8)#5
12'-0"	5'-3"	12"	1'-6"	15"	#6 AT 8"oc	#5 AT 12"oc	(9)#5

Plotted By: tyler
Plotted Date: Jun 12, 2025 - 8:13am

PROJECT NO	0424.2025.01.01
PROJECT MANAGER	RAF
DRAWN	JAS
ENGINEER	JESSICA FORTIN
	206.669.8709
	JESSICAF@MALSAM-TSANG.COM

REV	DESCRIPTION	DATE
	PERMIT SET	6.12.25

ARCH — CITIZEN DESIGN 206.535.7908

TYPICAL CONCRETE DETAILS

S3.0

SCALE - 3/4" = 1'-0"

COPYRIGHT © 2025 MALSAM TSANG ENGINEERING CORPORATION - ALL RIGHTS RESERVED

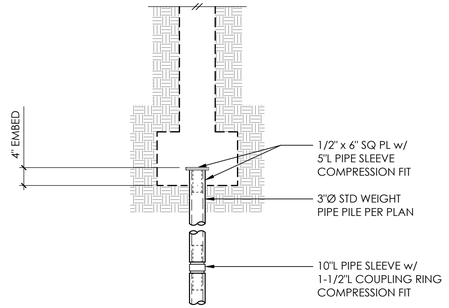

1

3"Ø PILES
TYPICAL PIPE PILE 2

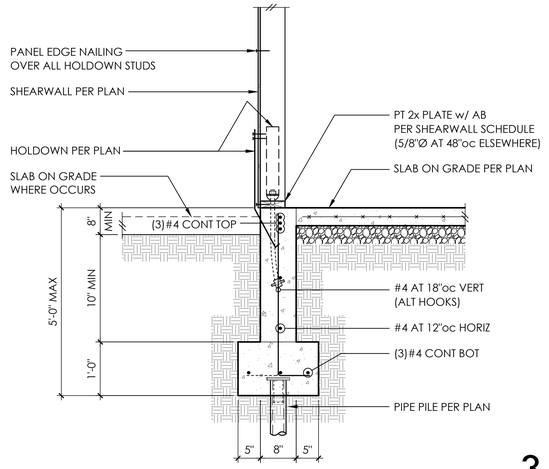

3

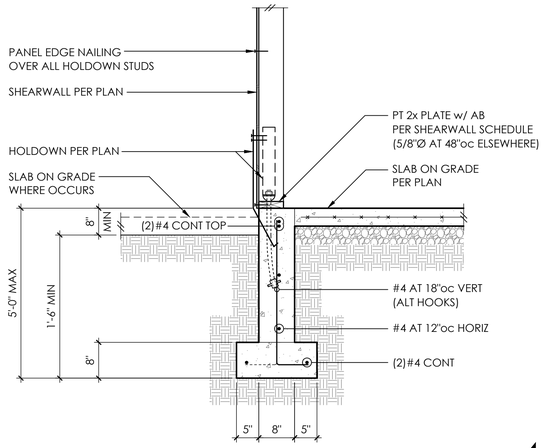

4

5

6

7

8

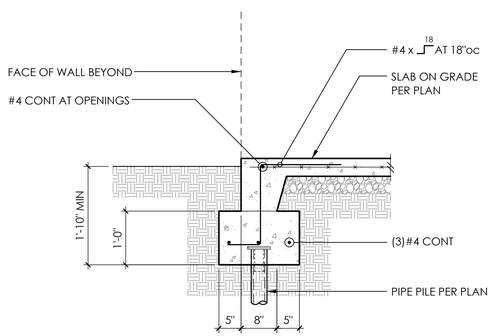

9

TYPICAL TURNED DOWN SLAB EDGE 10

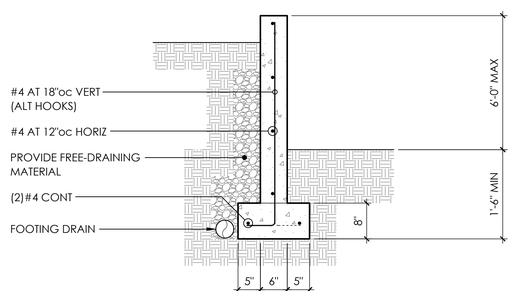

11

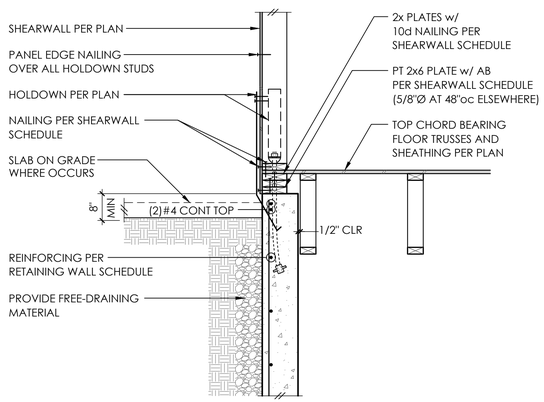

12

MALSAM TSANG
STRUCTURAL ENGINEERING
122 S JACKSON ST - SUITE 210
SEATTLE, WA 98104 - 206.789.6038

6427 E MERCER WAY
MERCER ISLAND, WA

IVAN C. TSANG
STATE OF WASHINGTON
43968
REGISTERED
PROFESSIONAL ENGINEER

PROJECT NO	0424.2025.01.01
PROJECT MANAGER	RAF
DRAWN	JAS
ENGINEER	JESSICA FORTIN
	206.669.8709
	JESSICAF@MALSAM-TSANG.COM

REV	DESCRIPTION	DATE
	PERMIT SET	6.12.25

ARCH CITIZEN DESIGN
206.535.7908

CONCRETE DETAILS

S3.1
SCALE - 3/4" = 1'-0"

Plotted By: YiHsi
Plotted Date: Jun 12, 2025 - 8:13am

COPYRIGHT © 2025 MALSAM TSANG ENGINEERING CORPORATION - ALL RIGHTS RESERVED

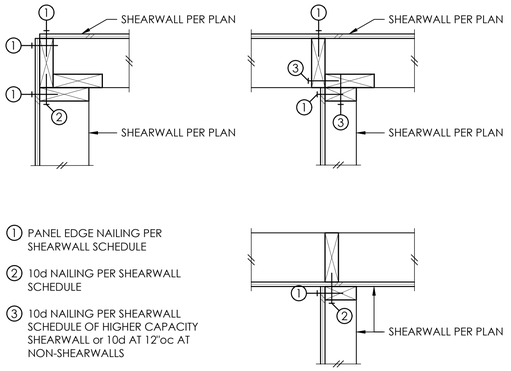

1. PANEL EDGE NAILING PER SHEARWALL SCHEDULE
2. 10d NAILING PER SHEARWALL SCHEDULE
3. 10d NAILING PER SHEARWALL SCHEDULE OF HIGHER CAPACITY SHEARWALL or 10d AT 12"oc AT NON-SHEARWALLS

SCALE: 1-1/2" = 1'-0"

TYPICAL SHEARWALL INTERSECTIONS 1

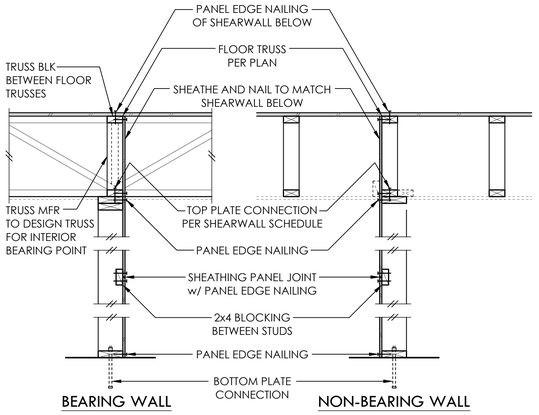

NOTE:
SEE SHEARWALL SCHEDULE FOR ALL NAILING AND CONNECTIONS, NOT OTHERWISE NOTED

TYPICAL SHEARWALL CONSTRUCTION 2

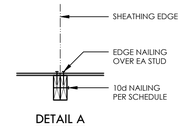

DETAIL A
PLAN VIEW AT ABUTTING PANEL EDGES OF SW3 AND SW2

SHEARWALL SCHEDULE①②③④⑤⑦

MARK	SHEATHING	PANEL EDGE NAILING	TOP PLATE CONNECTION		BASE PLATE CONNECTION	
			TRUSS	RIM/BEAM⑥	AT WOOD	AT CONCRETE
SW6	1/2" PLY or 7/16" OSB	8d AT 6"oc	10d AT 6"oc	A35 AT 30"oc	12d AT 6"oc	5/8"Ø AB AT 48"oc
SW4	1/2" PLY or 7/16" OSB	8d AT 4"oc	10d AT 4"oc	A35 AT 18"oc	12d AT 4"oc	5/8"Ø AB AT 42"oc
SW3 ④	1/2" PLY or 7/16" OSB	8d AT 3"oc	(2)ROWS 10d AT 6"oc	A35 AT 16"oc	(2)ROWS 12d AT 6"oc	5/8"Ø AB AT 36"oc
SW2 ④	1/2" PLY or 7/16" OSB	8d AT 2"oc	(2)ROWS 10d AT 4"oc	A35 AT 12"oc	(2)ROWS 12d AT 4"oc	5/8"Ø AB AT 24"oc

① BLOCK PANEL EDGES WITH 2x4 LAID FLAT AND NAIL PANELS TO INTERMEDIATE SUPPORTS WITH 8d AT 12"oc.

② 8d NAILS SHALL BE 0.131"Ø x 2-1/2", 10d NAILS SHALL BE 0.131"Ø x 3", AND 12d NAILS SHALL BE 0.131"Ø x 3-1/4".

③ EMBED ANCHOR BOLTS AT LEAST 7". ALL BOLTS SHALL HAVE 3" x 3" x 0.229" PLATE WASHERS. THE PLATE WASHER SHALL EXTEND TO WITHIN 1/2" OF THE EDGE OF THE BOTTOM PLATE ON THE SIDE WITH SHEATHING.

④ 3x STUDS OR DBL STUDS NAILED TOGETHER w/ 10d NAILING IS REQD AT ABUTTING PANEL EDGES OF SW3 AND SW2. REFER TO DETAIL A. WHERE 3x STUDS ARE USED, STAGGER NAILS AT ADJOINING PANEL EDGES.

⑤ TWO STUDS MINIMUM OR POST PER PLAN ARE REQUIRED AT EACH END OF ALL SHEARWALLS AND ALL END STUDS SHALL RECEIVE PANEL EDGE NAILING.

⑥ ALL EXTERIOR WALLS SHALL BE SW6, UNLESS NOTED OTHERWISE.

⑦ NAILS SHALL NOT BE SPACED LESS THAN 3/8" FROM EDGES OF SHEATHING. SHEATHING NAILS SHALL BE DRIVEN SO THEIR HEADS ARE FLUSH WITH SHEATHING (NOT COUNTERSUNK).

⑧ LTP4's INSTALLED OVER SHEATHING WITH 8d (0.131"Ø x 2-1/2") NAILS MAY BE SUBSTITUTED FOR A35's AT CONTRACTORS OPTION.

4

MALSAM TSANG STRUCTURAL ENGINEERING
122 S JACKSON ST - SUITE 210
SEATTLE, WA 98104 - 206.789.6038

6427 E MERCER WAY
MERCER ISLAND, WA

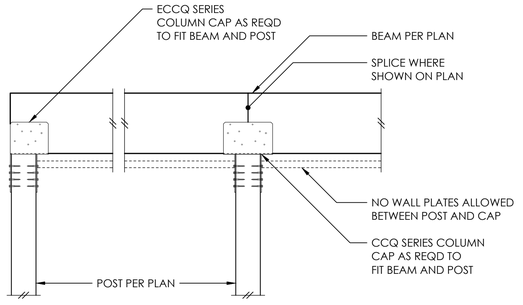

5

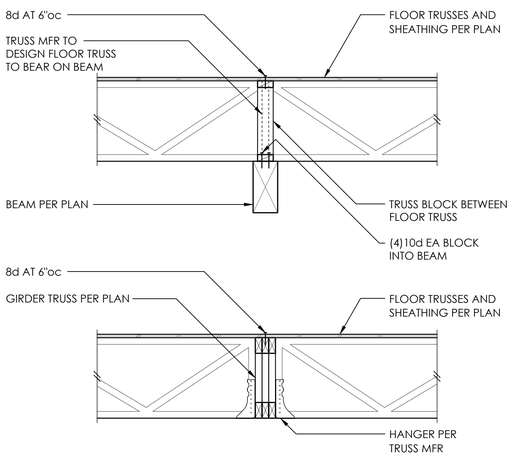

TYPICAL DROPPED BEAM AND GIRDER TRUSS 6

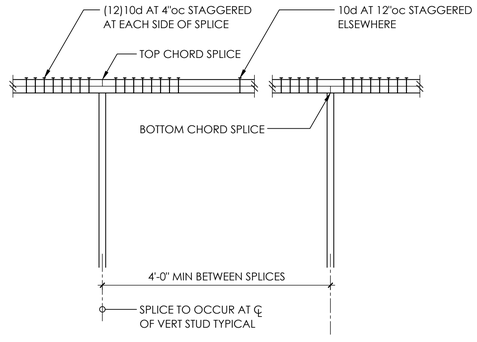

NOTE:
1. NAILING AT TOP PLATE SPLICES MAY BE ELIMINATED w/ CS16 x 30"

2. WHERE VERTICAL PENETRATIONS THRU PLATE EXCEED 1" FOR A 4x WALL OR 3" FOR A 6x WALL - PROVIDE CS16 x 30" AT TOP PLATE

3. MINIMUM EDGE DISTANCE FOR VERTICAL PENETRATIONS THRU TOP PLATE IS 1-1/4"

AT SHEARWALLS
TYPICAL TOP PLATE SPLICE 7

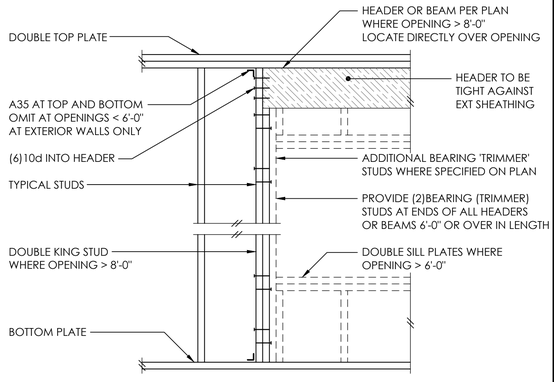

TYPICAL HEADER SUPPORT 8

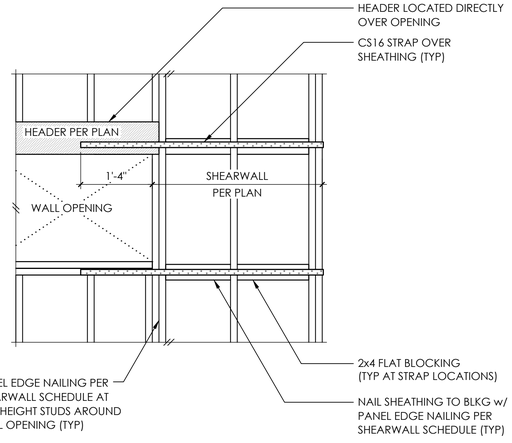

11

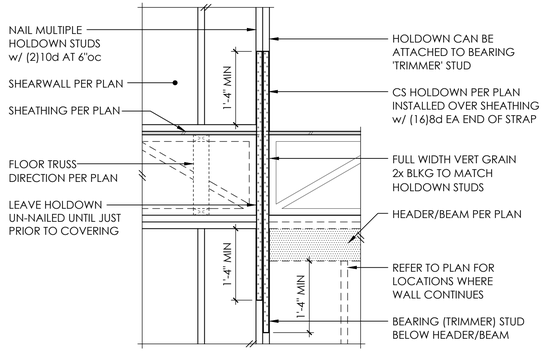

TYPICAL CS16 HOLDOWN 12

IVAN C. TSANG
STATE OF WASHINGTON
43968
REGISTERED
PROFESSIONAL ENGINEER

PROJECT NO	0424.2025.01.01
PROJECT MANAGER	RAF
DRAWN	JAS
ENGINEER	JESSICA FORTIN
	206.669.8709
	JESSICAF@MALSAM-TSANG.COM

REV	DESCRIPTION	DATE
	PERMIT SET	6.12.25

ARCH	CITIZEN DESIGN
	206.535.7908

TYPICAL WOOD FRAMING DETAILS

S4.0
SCALE - 3/4" = 1'-0"

Plotted by: rafel
Plotted Date: Jun 12, 2025 - 8:13am

COPYRIGHT © 2025 MALSAM TSANG ENGINEERING CORPORATION - ALL RIGHTS RESERVED

1

2

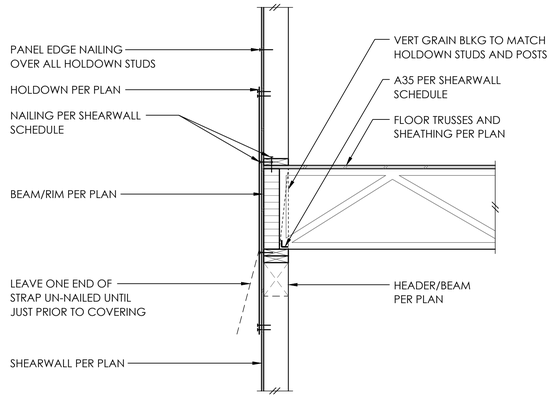

3

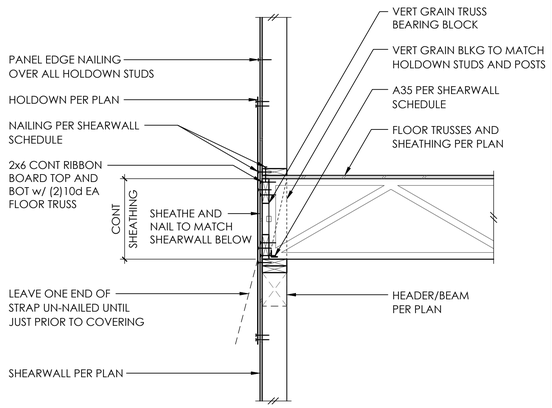

4

5

6

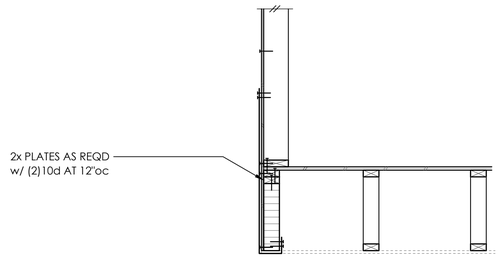

FOR CALLOUTS
IN COMMON
REFER 11/S4.1

7

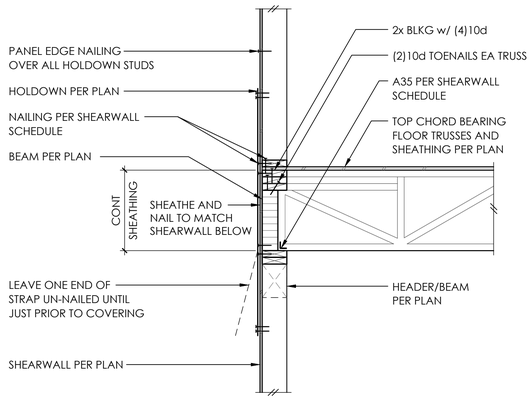

8

9

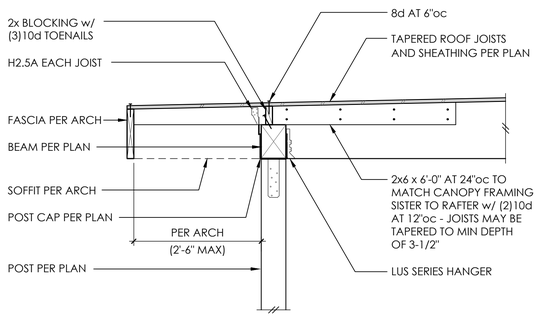

10

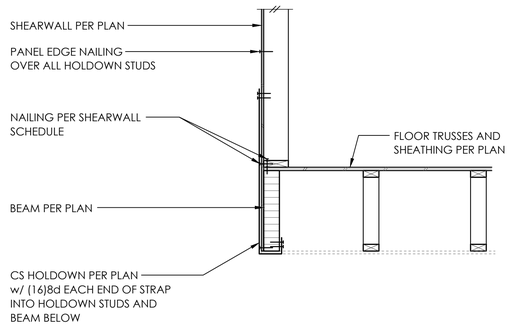

11

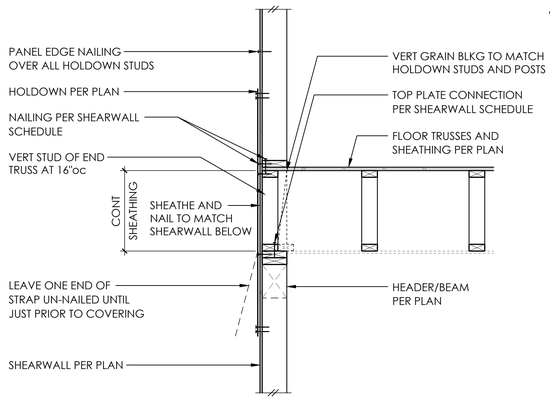

12

Printed By: rafel
Printed Date: Jul 12, 2025 - 8:13am

MALSAM TSANG
STRUCTURAL ENGINEERING
122 S JACKSON ST - SUITE 210
SEATTLE, WA 98104 - 206.789.6038

6427 E MERCER WAY
MERCER ISLAND, WA

IVAN C. TSANG
STATE OF WASHINGTON
43968
REGISTERED
PROFESSIONAL ENGINEER

PROJECT NO	0424.2025.01.01
PROJECT MANAGER	RAF
DRAWN	JAS
ENGINEER	JESSICA FORTIN
	206.669.8709
	JESSICAF@MALSAM-TSANG.COM

REV	DESCRIPTION	DATE
	PERMIT SET	6.12.25

ARCH	CITIZEN DESIGN
	206.535.7908

WOOD FRAMING DETAILS

S4.1

SCALE - 3/4" = 1'-0"

COPYRIGHT © 2025 MALSAM TSANG ENGINEERING CORPORATION - ALL RIGHTS RESERVED

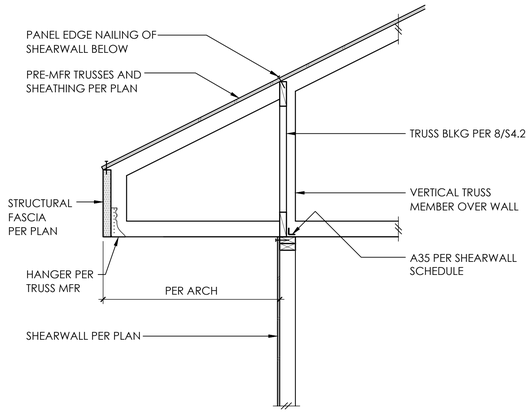

3

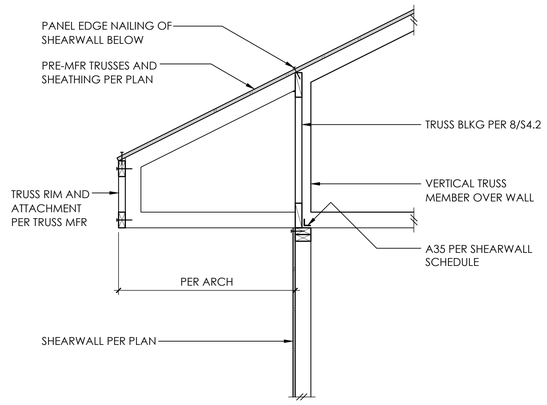

4

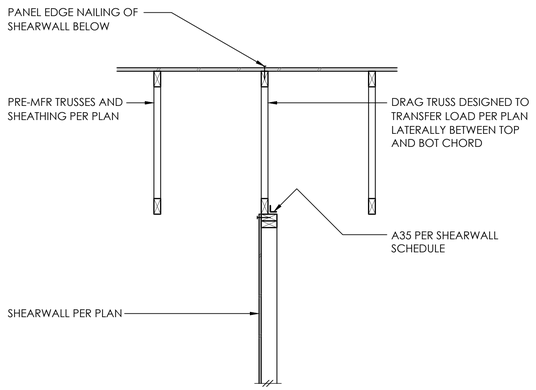

6

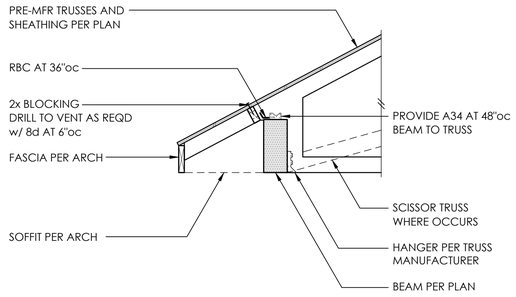

7

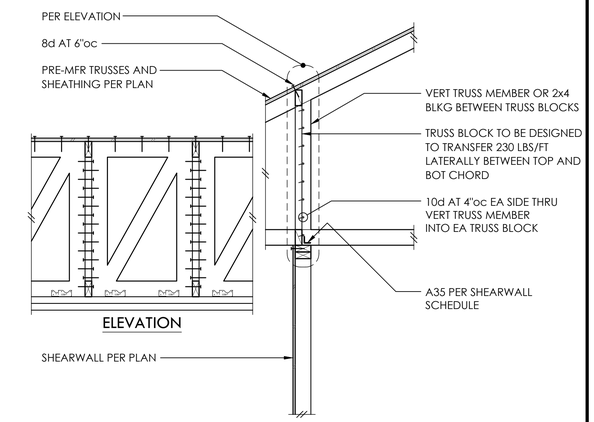

8

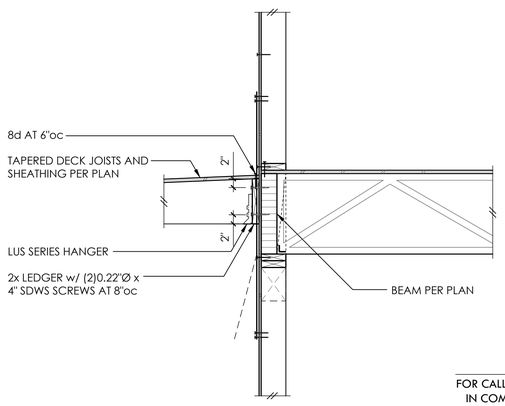

FOR CALLOUTS IN COMMON REFER X/SX.X

10

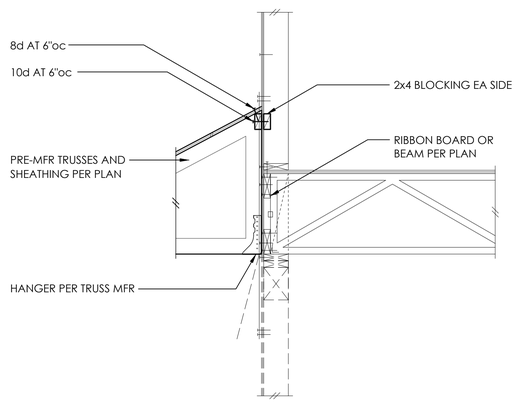

11

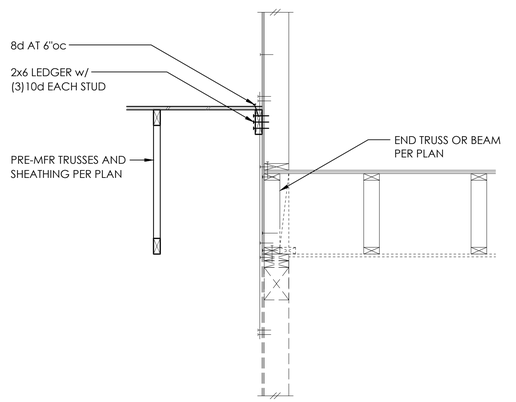

12

MALSAM TSANG STRUCTURAL ENGINEERING
122 S JACKSON ST - SUITE 210
SEATTLE, WA 98104 - 206.789.6038

6427 E MERCER WAY
MERCER ISLAND, WA

IVAN C. TSANG — STATE OF WASHINGTON — 43968 — REGISTERED PROFESSIONAL ENGINEER

PROJECT NO	0424.2025.01.01
PROJECT MANAGER	RAF
DRAWN	JAS
ENGINEER	JESSICA FORTIN
	206.669.8709
	JESSICAF@MALSAM-TSANG.COM

REV	DESCRIPTION	DATE
	PERMIT SET	6.12.25

ARCH — CITIZEN DESIGN 206.535.7908

WOOD FRAMING DETAILS

S4.2

SCALE - 3/4" = 1'-0"

Plotted by: ryanf
Plotted date: Jun 12, 2025 - 8:13am

6427 E MERCER WAY
MERCER ISLAND, WA 98040
CIVIL PLANS

LEGAL DESCRIPTION:

PARCEL "A" (APN 3024059001):

THAT PORTION OF THE NORTH 150 FEET OF THE NORTHWEST QUARTER OF THE NORTHEAST QUARTER OF SECTION 30, TOWNSHIP 24 NORTH, RANGE 5 EAST, W.M. IN KING COUNTY WASHINGTON, LYING WESTERLY OF EAST MERCER WAY AND LYING EASTERLY OF A LINE DESCRIBED AS FOLLOWS:

BEGINNING AT A POINT ON THE NORTH LINE OF SECTION 30, TOWNSHIP 24 NORTH, RANGE 5 EAST, W.M., IN KING COUNTY, WASHINGTON, WHICH BEARS SOUTH 88 DEGREES 33'02" EAST 550.23 FEET, FROM THE NORTH QUARTER OF SAID SECTION 30; THENCE SOUTH 1 DEGREE 28'29" WEST 150 FEET TO THE SOUTH LINE OF THE NORTH 150 FEET OF SAID NORTHWEST QUARTER OF THE NORTHEAST QUARTER AND THE TERMINUS OF SAID LINE, KNOWN AS THE ORIGINAL PARCEL. WHICH PORTION LIES WESTERLY OF A LINE DRAWN FROM A POINT ON THE NORTH LINE OF THE ORIGINAL PARCEL WHICH POINT LIES 342.98 FEET WEST OF THE WEST LINE OF EAST MERCER WAY AND A POINT ON THE SOUTH LINE OF THE ORIGINAL PARCEL WHICH LINE LIES 221 FEET WEST OF THE WEST LINE OF EAST MERCER WAY.

TOGETHER WITH A NONEXCLUSIVE EASEMENT FOR ROAD AND UTILITIES OVER AND ACROSS THE SOUTH 25 FEET OF THE FOLLOWING DESCRIBED TRACT: THAT PORTION OF THE NORTHWEST QUARTER OF THE NORTHEAST QUARTER OF SECTION 30, TOWNSHIP 24, NORTH, RANGE 5, EAST, W.M., IN KING COUNTY, WASHINGTON, DESCRIBED AS FOLLOWS:

BEGINNING AT THE INTERSECTION OF THE NORTH LINE OF SAID SUBDIVISION WITH THE WESTERLY MARGIN OF EAST MERCER WAY; THENCE NORTH 88 DEGREES 33'02" WEST 117.98 FEET TO TRUE POINT BEGINNING OF THIS DESCRIPTION; THENCE SOUTH 88 DEGREES 33'02" EAST 117.98 FEET; THENCE SOUTHERLY ALONG SAID WESTERLY MARGIN OF EAST MERCER WAY TO THE SOUTH LINE OF THE NORTH 150 OF SAID SUBDIVISION; THENCE NORTH 88 DEGREES 33'02" WEST ALONG SAID SOUTH LINE 118 FEET; THENCE NORTHERLY TO THE TRUE POINT OF BEGINNING;

TOGETHER WITH A NONEXCLUSIVE EASEMENT FOR ROAD AND UTILITIES OVER AND ACROSS THE SOUTH 30 FEET OF THE FOLLOWING DESCRIBED TRACT:

THAT PORTION OF THE NORTH 150 FEET OF THE NORTHWEST QUARTER OF THE NORTHEAST QUARTER OF SECTION 30, T.24N, R5EWM, IN KING COUNTY WASHINGTON, LYING WESTERLY OF EAST MERCER WAY AND LYING EASTERLY OF A LINE DESCRIBED AS FOLLOWS:

BEGINNING AT A POINT ON THE NORTH LINE OF SECTION 30, T24N, R5E WM, IN KING COUNTY, WASHINGTON, WHICH BEARS SOUTH 88 DEGREES 33'02" EAST 550.23 FEET FROM THE NORTH QUARTER CORNER OF SAID SECTION 30; THENCE SOUTH 1 DEGREE 28'29" WEST 150 FEET TO THE SOUTH LINE OF THE NORTH 150 FEET OF SAID NORTHWEST QUARTER OF THE NORTHEAST QUARTER AND THE TERMINUS OF SAID LINE, KNOWN AS THE ORIGINAL PARCEL. WHICH PORTION LIES WESTERLY OF A LINE DRAWN FROM A POINT ON THE NORTH LINE OF THE ABOVE-DESCRIBED PROPERTY WHICH LIES 117.98 FEET WEST OF THE WEST LINE OF EAST MERCER WAY TO A POINT ON THE SOUTH LINE OF THE ORIGINAL PARCEL WHICH POINT LIES 118 FEET WEST OF THE WEST LINE OF EAST MERCER WAY. SAID LOT 2 TO BE BOUNDED ON THE WEST BY A LINE DRAWN FROM A POINT ON THE NORTH LINE OF THE ORIGINAL PARCEL, WHICH POINT LIES 342.98 FEET WEST OF THE WEST LINE OF EAST MERCER WAY AND A POINT ON THE SOUTH LINE OF THE ORIGINAL PARCEL WHICH LIES 221 FEET WEST OF THE WEST LINE OF EAST MERCER WAY.

SUBJECT TO: RESERVATIONS, RESTRICTIONS, COVENANTS AND EASEMENTS OF RECORD.

PARCEL "B" (APN 3024059151):

THAT PORTION OF THE NORTHWEST QUARTER OF THE NORTHEAST QUARTER OF SECTION 30, TOWNSHIP 24 NORTH, RANGE 5 EAST, W.M., IN KING COUNTY, WASHINGTON, DESCRIBED AS FOLLOWS:

COMMENCING AT A POINT ON THE NORTH LINE OF SAID SECTION 30 WHICH BEARS SOUTH 88 DEGREES 33'02" EAST 550.23 FEET FROM THE NORTH QUARTER CORNER OF SAID SECTION 30; THENCE SOUTH 1 DEGREE 28'29" WEST 150 FEET TO THE SOUTH LINE OF THE NORTH 150 FEET OF SAID SECTION 30; THENCE SOUTH 88 DEGREES 33'02" EAST ALONG SAID SOUTH LINE OF THE NORTH 150 FEET FOR A DISTANCE OF 374.02 FEET TO THE TRUE POINT OF THE BEGINNING; THENCE CONTINUING SOUTH 88 DEGREES 33'02" EAST 103.06 FEET TO THE WESTERLY MARGIN OF EAST MERCER WAY; THENCE SOUTHERLY ALONG SAID WESTERLY MARGIN TO AN INTERSECTION WITH THE SOUTH LINE OF THE NORTH 300 FEET OF SAID SECTION 30; THENCE NORTH 88 DEGREES 33'02" WEST ALONG SAID SOUTH LINE OF THE NORTH 300 FEET TO AN INTERSECTION WITH THE NORTHERLY MARGIN OF EAST MERCER WAY; THENCE WESTERLY ALONG SAID NORTHERLY MARGIN OF EAST MERCER WAY TO A POINT FROM WHICH THE TRUE POINT OF BEGINNING BEARS NORTH 17 DEGREES 17'39" EAST, THENCE NORTH 17 DEGREES 17'39" EAST 153.12 FEET TO THE TRUE POINT OF BEGINNING.

EXCEPT THE NORTHERLY 15 FEET THEREOF AS MEASURED AT RIGHT ANGLES TO THE NORTHERLY LINE THEREOF.

PARCEL "C" (APN 3024059043):

THAT PORTION OF THE NORTHWEST QUARTER OF THE NORTHEAST QUARTER OF SECTION 30, TOWNSHIP 24 NORTH, RANGE 5 EAST, W.M., IN KING COUNTY, DESCRIBED AS FOLLOWS:

LEGAL DESCRIPTION CONT'D:

BEGINNING AT A POINT ON THE NORTH LINE OF SAID SECTION 30 WHICH BEARS SOUTH 88 DEGREES 33 MINUTES 02 SECONDS EAST 550, 23 FEET FROM THE NORTH QUARTER CORNER OF SAID SECTION 30;

THENCE SOUTH 01 DEGREES 28 MINUTES 29 SECONDS WEST 150 FEET TO THE SOUTH LINE OF THE NORTH 150 FEET OF SAID SECTION 30 TO THE TRUE POINT OF BEGINNING; THENCE SOUTH 88 DEGREES 33 MINUTES 02 SECONDS EAST ALONG SAID SOUTH LINE OF THE NORTH 150 FEET FOR A DISTANCE OF 477.08 FEET TO THE WESTERLY MARGIN OF EAST MERCER WAY; THENCE SOUTHERLY ALONG SAID WESTERLY MARGIN TO AN INTERSECTION WITH THE SOUTH LINE OF THE NORTH 300 FEET OF SAID SECTION 30; THENCE NORTH 88 DEGREES 33 MINUTES 02 SECONDS WEST ALONG SAID SOUTH MARGIN OF EAST MERCER WAY; THENCE WESTERLY ALONG SAID NORTHERLY MARGIN OF EAST MERCER WAY TO A POINT FROM WHICH THE TRUE POINT OF BEGINNING BEARS NORTH 27 DEGREES 39 MINUTES 33 SECONDS EAST 31 FEET DISTANT; THENCE NORTH 17 DEGREES 38 MINUTES 33 SECONDS EAST 31 FEET TO THE TRUE POINT OF BEGINNING.

EXCEPT THAT PORTION DESCRIBED AS FOLLOWS:

THAT PORTION OF THE NORTHWEST QUARTER OF THE NORTHEAST QUARTER OF SECTION 30, TOWNSHIP 24 NORTH, RANGE 5 EAST, W.M., IN KING COUNTY, DESCRIBED AS FOLLOWS:

BEGINNING AT A POINT ON THE NORTH LINE OF SAID SECTION 30 WHICH BEARS SOUTH 88 DEGREES 33 MINUTES 02 SECONDS EAST 550.23 FEET FROM THE NORTH QUARTER CORNER OF SAID SECTION 30; THENCE SOUTH 01 DEGREE 28 MINUTES 29 SECONDS WEST 150 FEET TO THE SOUTH LINE OF THE NORTH 150 FEET OF SAID SECTION 30; THENCE SOUTH 88 DEGREES 33 MINUTES 02 SECONDS EAST ALONG SAID SOUTH LINE OF THE NORTH 150 FEET FOR A DISTANCE OF 374.02 FEET TO THE TRUE POINT OF BEGINNING; THENCE CONTINUING SOUTH 86 DEGREES 33 MINUTES 02 SECONDS EAST 103.06 FEET TO THE WESTERLY MARGIN OF EAST MERCER WAY; THENCE SOUTHERLY ALONG SAID WESTERLY MARGIN TO AN INTERSECTION WITH THE SOUTH LINE OF THE NORTH 300 FEET OF SAID SECTION 30; THENCE NORTH 88 DEGREES 33 MINUTES 02 SECONDS WEST ALONG SAID SOUTH LINE OF THE NORTH 300 FEET TO AN INTERSECTION WITH THE NORTHERLY MARGIN OF EAST MERCER WAY; THENCE WESTERLY ALONG SAID NORTHERLY MARGIN OF EAST MERCER WAY TO A POINT FROM WHICH THE TRUE POINT OF BEGINNING BEARS NORTH 17 DEGREES 17 MINUTES 39 SECONDS EAST; THENCE NORTH 17 DEGREES 17 MINUTES 39 SECONDS EAST 153.12 FEET TO THE TRUE POINT OF BEGINNING;

EXCEPT THE NORTHERLY 15 FEET THEREOF AS MEASURED AT RIGHT ANGLES TO THE NORTHERLY LINE THEREOF.

SITUATED IN THE CITY OF MERCER ISLAND, COUNTY OF KING, STATE OF WASHINGTON.

APN 3024059213:

LOT 7 OF MERCER ISLAND SHORT PLAT NO. 82-09-18, RECORDING NO. 8410179003SD, RECORDS OF KING COUNTY, WASHINGTON.

TOGETHER WITH AN EASEMENT FOR INGRESS AND EGRESS RECORDED UNDER RECORDING NO. 8311070717 AND DELINEATED ON SAID SHORT PLAT.

SITUATE IN THE COUNTY OF KING, STATE OF WASHINGTON.

HORIZONTAL DATUM

NAD 1983 (2011); PER RTK GPS TIES AND THE WASHINGTON STATE REFERENCE NETWORK (WSRN). UNITS OF MEASUREMENT ARE U.S. SURVEY FEET.

VERTICAL DATUM

NAVD 1988; PER RTK GPS TIES AND THE WASHINGTON STATE REFERENCE NETWORK (WSRN). UNITS OF MEASUREMENT ARE U.S. SURVEY FEET.

CONTOUR INTERVAL = 1 FEET.
CONTOURS DERIVED FROM DIRECT FIELD OBSERVATION.
CONTOURS FOLLOW NATIONAL MAPPING STANDARDS, ONE-HALF CONTOUR INTERVAL.

.

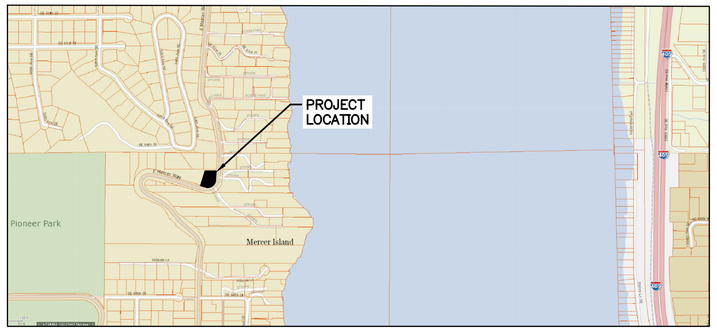

VICINITY MAP
SCALE: 1" = 200'

CONTACTS:

APPLICANT:
ISAAC GREENETZ
CITIZEN DESIGN
10 DRAVUS ST
SEATTLE, WA 98109
EMAIL: IGREENETZ@COLLABORATIVECO.COM
CONTACT: ISAAC GREENETZ

CIVIL ENGINEER:
FACET
9706 4TH AVE NE, SUITE 300
SEATTLE, WA 98115
PHONE: (206) 523.0024
CONTACT: BEN IDDINS, P.E

SURVEYOR:
INFORMED LAND SURVEY
PO BOX 5137
TACOMA, WA 98415
PHONE: (253) 627.2070
CONTACT: SHAUN WARREN

ABBREVIATIONS:

BM	= BENCHMARK
CB	= CATCH BASIN
CONC	= CONCRETE
DEMO	= DEMOLITION
EG	= EXISTING GRADE
EOP	= EDGE OF PAVEMENT
EX	= EXISTING
FF	= FINISHED FLOOR
FG	= FINISHED GRADE
FH	= FIRE HYDRANT
IE	= INVERT ELEVATION
LF	= LINEAL FEET
SD	= STORM DRAIN
SDFM	= STORM DRAIN FORCE MAIN
SDMH	= STORM DRAIN MANHOLE
SS	= SANITARY SEWER
SSSCO	= SANITARY SIDE SEWER CLEANOUT
SSS	= SANITARY SIDE SEWER
TOC	= TOP OF CURB
TOP	= TOP OF PAVEMENT
TYP	= TYPICAL
UGP	= UNDERGROUND POWER
W	= WATER
WM	= WATERMAIN

SHEET INDEX

SHEET NO	SUBSHEET NO	TITLE
1	C01	COVER SHEET
2	C02	GENERAL NOTES & LEGEND
3	C03	EXISTING CONDITIONS
4	C04	TESC PLAN
5	C05	GRADING PLAN
6	C06	DRAINAGE PLAN
7	C07	UTILITY PLAN
8	C08	DETAILS
9	C09	DETAILS
10	C10	DETAILS
11	C11	DETAILS
12	C12	DETAILS
13	C13	DETAILS
14	C14	DETAILS

COVER SHEET

NO.	DATE	BY	REVISION

BASE MAP/TOPOGRAPHY PROVIDED BY OTHERS. FACET CANNOT BE HELD LIABLE FOR ACCURACY. CONTRACTOR SHALL FIELD VERIFY GRADES, UTILITIES, AND ALL OTHER EXISTING FEATURES AND CONDITIONS. IF CONDITIONS ARE NOT AS SHOWN AND/OR PLANS ARE INCOMPLETE, CONTACT FACET PRIOR TO CONSTRUCTION.

FACET
P: 206.522.0024
www.facetnw.com
9706 4th Ave NE
Suite 300
Seattle, WA 98115
FEDERAL WAY | KIRKLAND | MOUNT VERNON | SEATTLE | SPOKANE | WHIDBEY ISLAND

BENJAMIN J. IDDINS
STATE OF WASHINGTON
Digitally Signed by Benjamin J. Iddins
Date: 2025.06.05 08:48:47 -07'00'
REGISTERED PROFESSIONAL ENGINEER

CALL 811
2 BUSINESS DAYS
BEFORE YOU DIG
(UNDERGROUND UTILITY LOCATIONS ARE APPROX.)

6427 E MERCER WAY
6427 E MERCER WAY
MERCER ISLAND, WA 98040
PROJECT No. 2501.0550.00

PERMIT PLAN

COVER SHEET

DATE: 6/5/2025

PLAN NUMBER:
C01

SHEET 1 OF 11

FILE LOCATION: Z:\SHARED\PROJECTS\ACTIVE\2025\01\2501.0550_CITIZEN DESIGN\6. 6427 E MERCER WAY MERCER ISLAND\DRAWINGS\CAD-BIM\ACTIVEFILES\6427 E MERCER WAY_MERCER ISLAND.DWG - ORIGINAL SHEET SIZE: ARCH FULL BLEED D (36.00 X 24.00 INCHES) - LAST MODIFIED BY: ZOE POPOVICH
PRINCIPAL: BI DESIGNED BY: ZP DRAWN BY: GS CK CHECKED BY: BI
PROJECT MANAGER: JR

POST-CONSTRUCTION SOIL QUALITY AND DEPTH NOTES:

1. A TOPSOIL LAYER WITH A MINIMUM ORGANIC MATTER CONTENT OF 10% DRY WEIGHT IN PLANTING BEDS, AND 5% ORGANIC MATTER CONTENT IN TURF AREAS, AND A PH FROM 6.0 TO 8.0 OR MATCHING THE PH OF THE UNDISTURBED SOIL. THE TOPSOIL LAYER SHALL HAVE A MINIMUM DEPTH OF EIGHT INCHES EXCEPT WHERE TREE ROOTS LIMIT THE DEPTH OF INCORPORATION OF AMENDMENTS NEEDED TO MEET THE CRITERIA. SUBSOILS BELOW THE TOPSOIL LAYER SHOULD BE SCARIFIED AT LEAST 4 INCHES WITH SOME INCORPORATION OF THE UPPER MATERIAL TO AVOID STRATIFIED LAYERS, WHERE FEASIBLE.
2. MULCH PLANTING BEDS WITH 2 INCHES OF ORGANIC MATERIAL
3. USE COMPOST AND OTHER MATERIALS THAT MEET ORGANIC CONTENT OUTLINED IN BMP T5.13 OF THE DOE MANUAL

TREE PROTECTION STANDARDS:

1. TREE PROTECTION FENCING SHALL BE ERECTED AT PRESCRIBED DISTANCE PER ARBORIST REPORT. FENCES SHALL BE CONSTRUCTED OF CHAIN LINK AND BE AT LEAST 4 FEET HIGH.
2. INSTALL HIGHLY VISIBLE SIGNS ON PROTECTION FENCING SPACED NO FURTHER THAN 15 FEET APART. SIGNS SHALL STATE “TREE PROTECTION AREA-ENTRANCE PROHIBITED”, AND “CITY OF MERCER ISLAND” CODE ENFORCEMENT PHONE NUMBER.
3. NO WORK SHALL BE PERFORMED WITHIN PROTECTION FENCING UNLESS APPROVED BY PLANNING OFFICIAL. IN SUCH CASES, ACTIVITIES WILL BE APPROVED AND SUPERVISED BY A “QUALIFIED TREE PROFESSIONAL”.
4. THE ORIGINAL GRADE SHALL NOT BE ELEVATED OR REDUCED WITHIN PROTECTION FENCING WITHOUT THE PLANNING OFFICIAL AUTHORIZATION BASED ON RECOMMENDATIONS FROM A QUALIFIED PROFESSIONAL.
5. NO BUILDING MATERIALS, SPOILS, CHEMICALS OR SUBSTANCES OF ANY KIND WILL BE PERMITTED WITHIN PROTECTION FENCING
6. PROTECTION FENCING SHALL BE MAINTAINED UNTIL THE PLANNING OFFICIAL AUTHORIZES ITS REMOVAL.
7. ENSURE THAT ANY APPROVED LANDSCAPING WITHIN THE PROTECTED ZONE SUBSEQUENT TO THE APPROVED REMOVAL OF PROTECTION FENCING BE PERFORMED WITH HAND LABOR.

IN ADDITION TO THE ABOVE, THE PLANNING OFFICIAL MAY REQUIRE THE FOLLOWING:

A. IF EQUIPMENT IS AUTHORIZED TO OPERATE WITHIN THE ROOT ZONE, THE AREA WILL BE MULCHED TO A DEPTH OF 6" OR COVERED WITH PLYWOOD OR SIMILAR MATERIAL TO PROTECT ROOTS FROM DAMAGE CAUSED BY HEAVY EQUIPMENT.
B. MINIMIZE ROOT DAMAGE BY EXCAVATING A 2-FOOT DEEP TRENCH, AT EDGE OF PROTECTION FENCING TO CLEANLY SEVER THE ROOTS OF PROTECTED TREES.
C. CORRECTIVE PRUNING TO AVOID DAMAGE FROM MACHINERY OR BUILDING ACTIVITY.
D. MAINTENANCE OF TREES THROUGHOUT CONSTRUCTION PERIOD BY WATERING AND FERTILIZATION.

FOOTING DRAINS:

1. FOOTING DRAINS SHALL BE INSTALLED AROUND ALL FOUNDATIONS WHICH ENCLOSE A CRAWL SPACE, CELLAR, BASEMENT, GARAGE OR OTHER BUILDING SPACE.
2. DRAINS SHALL BE CONSTRUCTED OF PERFORATED PIPE INSTALLED AT THE BASE OF THE FOOTING.
3. DRAIN PIPE SHALL MEET MATERIAL STANDARDS FOR D2729 FOR P.V.C. PIPE, WITH THE PERFORATIONS DIRECTED DOWNWARD.
4. GRANULAR BACKFILL SHALL BE PLACED AROUND AND ABOVE THE FOOTING DRAIN TO A DEPTH OF 2/3 OF THE HEIGHT OF THE WALL.
5. A FILTER FABRIC SHALL BE USED TO PREVENT SOIL PARTICLES FROM ENTERING THE FOOTING DRAIN. IT IS PREFERABLE THAT THE FABRIC BE PLACED BETWEEN THE GRANULAR BACKFILL AND THE NATIVE SOILS.

DRIVEWAY/PARKING AREA DRAINS:

1. LARGE IMPERVIOUS AREAS USED FOR PARKING OR MANEUVERING OF VEHICLES SHALL BE SLOPED TO DRAIN TO ONE OR MORE CATCH BASINS.
2. THE BASINS SHALL BE TIED INTO THE ON-SITE STORM DRAINAGE SYSTEM USING NON-PERFORATED PIPE OF THE SAME MATERIALS.
3. AT LEAST ONE CATCH BASIN SHALL HAVE AN OIL SEPARATOR TO CLEAN THE WATER, OIL AND SILT PRIOR TO ENTERING THE APPROVED STORM SYSTEM.
4. IN AREAS WHERE THE OFF-SITE STORM SYSTEM IS INADEQUATE, ON-SITE DETENTION OF RUNOFF MAY BE REQUIRED. (CONTACT THE DEVELOPMENT ENGINEER FOR MORE INFORMATION).

GENERAL:

1. SLOPE ALL DRAIN LINES AT 2% MINIMUM TOWARD THE OUTLET.
2. PROVIDE CLEANOUTS OR CONTROL STRUCTURES AS APPROPRIATE.
3. ALL DRAINAGE PIPING AND STRUCTURES ARE SUBJECT TO INSPECTION PRIOR TO BACKFILLING.
4. ROOF AND FOOTING DRAINS MAY BE COMBINED BEYOND THE LOWEST POINT OF THE FOOTING DRAIN.
5. USE SAND COLLARS AT CB CONNECTIONS TO P.V.C. PIPE.
6. UNLESS OTHERWISE SPECIFIED, 6" STORM DRAIN PIPE FOR ROOF DRAINS AND SEWER PIPE SHALL BE SDR35 PVC PIPE.
7. ALL FOOTING DRAIN AND PERFORATED PIPE SHALL BE D2729 PVC PIPE WITH THE PERFORATIONS DIRECTED DOWNWARDS.
8. ALL PERF PIPE SHALL BE 4" DIAMETER UNLESS OTHERWISE SHOWN.
9. CONTRACTOR TO VERIFY INVERTS OF STORM DRAIN IN ROW AND ADJUST ONSITE STORM SYSTEM AS NECESSARY.
10. CONTRACTOR TO FIELD LOCATE AND REROUTE ANY POTENTIAL UTILITY CONFLICTS WITH DETENTION FACILITY PRIOR TO CONSTRUCTION.
11. THE LAWN AND LANDSCAPE AREAS ARE REQUIRED TO PROVIDE POST-CONSTRUCTION SOIL QUALITY AND DEPTH IN ACCORDANCE WITH BMP T5.13. THE PROJECT CIVIL ENGINEER MUST PROVIDE A LETTER OF CERTIFICATION TO ENSURE THAT THE LAWN AND LANDSCAPE AREAS ARE MEETING THE POST-CONSTRUCTION SOIL QUALITY AND DEPTH REQUIREMENTS SPECIFIED ON THE APPROVED PLAN SET PRIOR TO FINAL INSPECTION OF THE PROJECT. CONTRACTOR MUST PROVIDE CIVIL ENGINEER W/ INFORMATION PROVING THE POST-CONSTRUCTION SOILS MEET THESE REQUIREMENTS.

DRAINAGE NOTES:

ROOF DRAINS:

1. NUMBER AND SIZE SHALL BE IN CONFORMANCE WITH THE UNIFORM PLUMBING CODE.
2. DOWNSPOUTS SHALL BE TIED INTO A NON-PERFORATED, RIGID, SMOOTH-BORE PIPE, WHICH DRAINS TO AN APPROVED STORM SYSTEM.
3. DRAINPIPE SHALL MEET MATERIAL STANDARDS FOR D2729 FOR P.V.C. PIPE, GR F-405 FOR SMOOTH-BORE H.D.P.E. PIPE.
4. PROVIDE CLEANOUTS AT THE UPPER END OF THE SYSTEM AND AT EACH CUMULATIVE CHANGE OF DIRECTION IN EXCESS OF 135 DEGREES.
5. ALL PIPE FITTINGS SHALL BE MADE OF THE SAME MATERIAL AS THE STRAIGHT PIPE. GLUED JOINTS SHALL USE A BONDING AGENT RECOMMENDED BY THE PIPE MANUFACTURER.

TESC/DEMO LEGEND:

- STABILIZED CONSTRUCTION ENTRANCE
- SOIL AMENDMENT
- PERIMETER PROTECTION (X)
- LIMITS OF LAND DISTURBING ACTIVITY (LIMITS)
- HIGH VISIBILITY FENCING (HVF)
- STOCKPILE LOCATION
- TREE PROTECTION FENCING
- TREE REMOVAL
- TEMPORARY SWALE

SURFACING LEGEND:

- CONCRETE
- ASPHALT
- ASPHALT ROADWAY MILL & RESURFACE
- SOIL AMENDMENT AREA / LANDSCAPE
- ROOF
- CURB & GUTTER
- ROOF OVERHANG
- RETAINING WALL
- SAWCUT

STORM DRAINAGE LEGEND:

- TYPE I CATCH BASIN
- TYPE 2 CATCH BASIN W/ GRATED LID
- AREA DRAIN
- STORM CLEANOUT
- STORM DRAINAGE PIPE (<12" Ø) (SD)
- STORM DRAINAGE PIPE (≥12" Ø)
- FOOTING DRAINS (DRN)

SANITARY SEWER LEGEND:

- SANITARY SIDE SEWER CLEANOUT
- SANITARY SEWER MANHOLE
- SANITARY SIDE SEWER (SSS)

WATER LEGEND:

- DOMESTIC WATER SERVICE / WATER MAIN < 12" (W)
- WATER METER

DRY UTILITY LEGEND:

- UNDERGROUND POWER SERVICE (UGP)
- GAS SERVICE LINE (GAS)

GRADING LEGEND:

- FINISH GRADE CONTOUR
- EXISTING GRADE CONTOUR

GENERAL NOTES & LEGEND

NO.	DATE	BY	REVISION

BASE MAP TOPOGRAPHY PROVIDED BY OTHERS. FACET CANNOT BE HELD LIABLE FOR ACCURACY. CONTRACTOR SHALL FIELD VERIFY GRADES, UTILITIES, AND ALL OTHER EXISTING FEATURES AND CONDITIONS. IF CONDITIONS ARE NOT AS SHOWN AND/OR PLANS ARE INCOMPLETE, CONTACT FACET PRIOR TO CONSTRUCTION.

FACET
P: 206.522.0024
www.facetnw.com
9706 4th Ave NE
Suite 300
Seattle, WA 98115
FEDERAL WAY | KIRKLAND | MOUNT VERNON | SEATTLE | SPOKANE | WHIDBEY ISLAND

BENJAMIN J. RIDER
STATE OF WASHINGTON
Digitally Signed by Benjamin J. Rider
2025.06.05 09:09:07 -07'00'
REGISTERED PROFESSIONAL ENGINEER

CALL 811
2 BUSINESS DAYS BEFORE YOU DIG
(UNDERGROUND UTILITY LOCATIONS ARE APPROX.)

6427 E MERCER WAY

6427 E MERCER WAY
MERCER ISLAND, WA 98040
PROJECT No. 2501.0550.00

PERMIT PLAN

GENERAL NOTES & LEGEND

DATE: 6/5/2025

PLAN NUMBER:

C02

SHEET 2 OF 11

FILE LOCATION: Z:\SHARED\PROJECTS\ACTIVE\2025\01\2501.0550_CITIZEN DESIGN_6427 E MERCER WAY MERCER ISLAND\DRAWINGS\CAD-REVIT\ACTIVEFILE\6427 E MERCER WAY_MERCER ISLAND.DWG - ORIGINAL SHEET SIZE: ARCH FULL BLEED D (36.00 X 24.00 INCHES) - LAST MODIFIED BY: ZOE POPOVICH
PRINCIPAL: BI PROJECT MANAGER: JR DESIGNED BY: ZP DRAWN BY: GS, CK CHECKED BY: BI

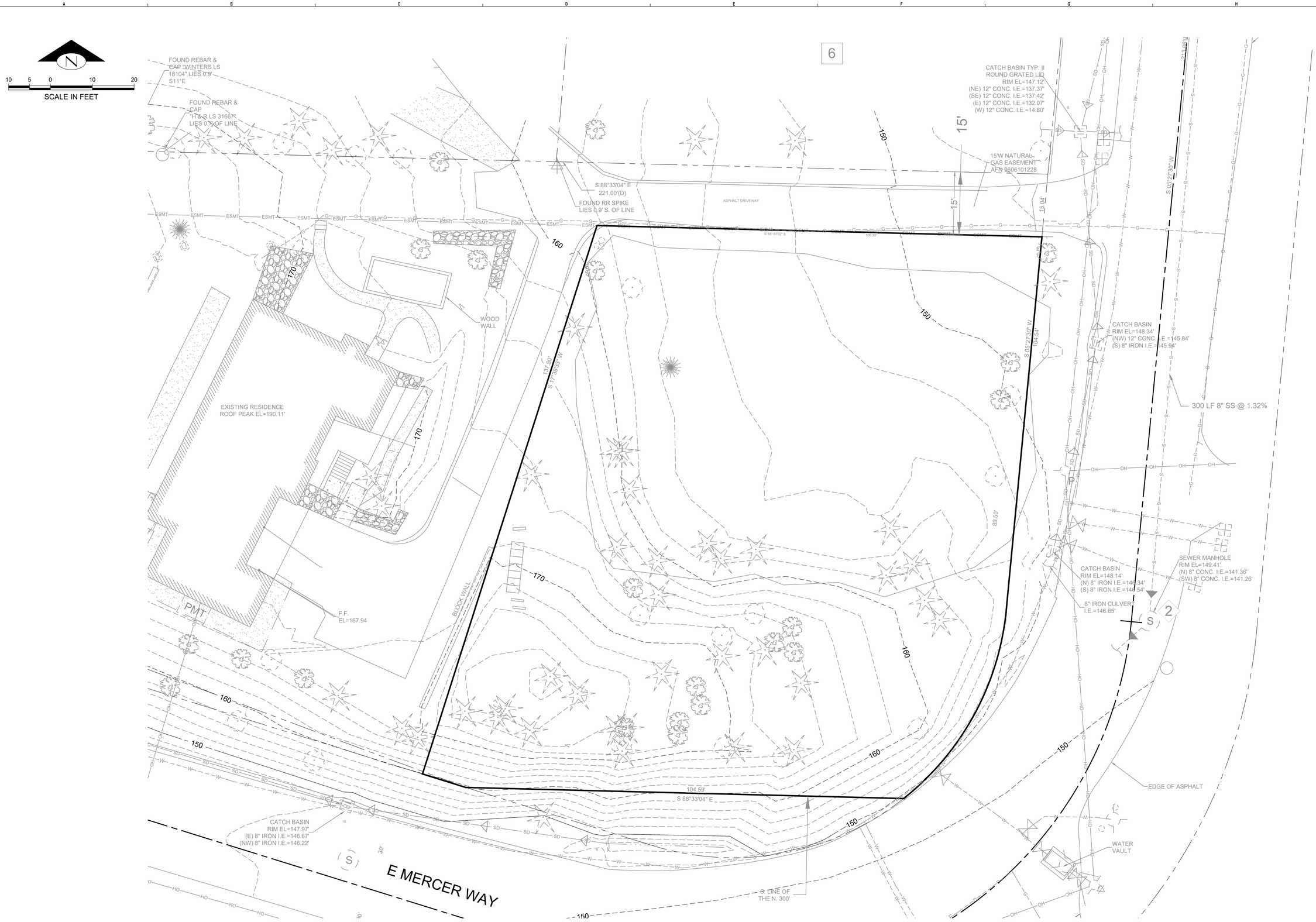

EXISTING CONDITIONS

SCALE: 1" = 10'

NO.	DATE	BY	REVISION

BASE MAP/TOPOGRAPHY PROVIDED BY OTHERS. FACET CANNOT BE HELD LIABLE FOR ACCURACY. CONTRACTOR SHALL FIELD VERIFY GRADES, UTILITIES, AND ALL OTHER EXISTING FEATURES AND CONDITIONS. IF CONDITIONS ARE NOT AS SHOWN AND/OR PLANS ARE INCOMPLETE, CONTACT FACET PRIOR TO CONSTRUCTION.

FACET
P: 206.523.0024
www.facetnw.com
9706 4th Ave NE
Suite 300
Seattle, WA 98115
FEDERAL WAY | KIRKLAND | MOUNT VERNON | SEATTLE | SPOKANE | WHIDBEY ISLAND

BENJAMIN J. IDDINGS
STATE OF WASHINGTON
Digitally Signed By Benjamin J. Iddings
2025.06.05 09:09:23 -07'00'
REGISTERED PROFESSIONAL ENGINEER

CALL 811
2 BUSINESS DAYS BEFORE YOU DIG
(UNDERGROUND UTILITY LOCATIONS ARE APPROX.)

6427 E MERCER WAY

6427 E MERCER WAY
MERCER ISLAND, WA 98040
PROJECT No. 2501.0550.00

PERMIT PLAN

EXISTING CONDITIONS

DATE: 6/5/2025

PLAN NUMBER:

C03

SHEET 3 OF 11

FILE LOCATION: Z:\SHARED\PROJECTS\ACTIVE\2025\01\2501.0550_CITIZEN DESIGN_6427 E MERCER WAY\ MERCER ISLAND\DRAWINGS\CAD-BE\UTILACTIVEFILE\6427 E MERCER WAY_MERCER ISLAND.DWG - ORIGINAL SHEET SIZE: ARCH FULL BLEED D (36.00 X 24.00 INCHES) - LAST MODIFIED BY: ZOE POPOVICH
PRINCIPAL: BI PROJECT MANAGER: JR DESIGNED BY: ZP DRAWN BY: GS, CK CHECKED BY: BI

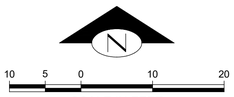

KEY NOTES:		
KEY	NOTE:	DETAIL/ SHEET
1	INSTALL TEMPORARY STORM DRAIN INLET PROTECTION IN ALL STRUCTURES WITHIN 500' OF THE PROJECT SITE (INCLUDING THOSE THAT BECOME OPERABLE DURING CONSTRUCTION) AND REMOVE AFTER PERMANENT SITE STABILIZATION	A/C08
2	INSTALL TEMPORARY STABILIZED CONSTRUCTION ENTRANCE OFF EDGE OF EX DWY. CONTRACTOR TO DETERMINE FINAL LOCATION IN FIELD BASED ON ACCESS AVAILABILITY	B/C08
3	INSTALL APPROX 278 LF PERIMETER PROTECTION*	C/C08
4	TREE PROTECTION FENCING (TYP)	TP/C04
5	PROPOSED STOCKPILE LOCATION. CONTRACTOR TO DETERMINE FINAL LOCATION IN FIELD	-
6	CONTRACTOR TO SWEEP STREET DAILY OR MORE OFTEN IF NECESSARY TO REMOVE TRACKED SEDIMENT	-
7	AMEND ALL DISTRUBED PERVIOUS AREAS IN ACCORDANCE W/ BMP T5.13 IN VOLUME V OF THE DOE 2019 STORMWATER MANAGEMENT MANUAL FOR WESTERN WASHINGTON	-
8	APPROXIMATE ON-SITE CLEARING LIMITS	-
9	INSTALL HIGH VISIBILITY FENCE ALONG ROW & PRIVATE DRIVE AISLE	-
10	EX GAS SERVICE LINE TO REMAIN AND BE PROTECTED	-
11	EX WATER METER AND SERVICE LINE TO REMAIN AND BE PROTECTED FOR NEIGHBORING PARCEL (#302405-9043)	-

* INSTALL PERIMETER PROTECTION, SUCH AS SILT FENCING, COMPOST SOCKS, OR STRAW WATTLES IN ACCORDANCE WITH VOL II OF THE 2019 DOE STORMWATER MANAGEMENT MANUAL FOR WESTERN WASHINGTON

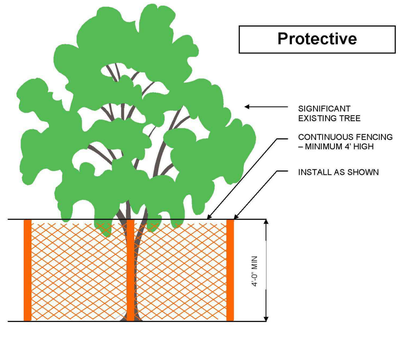

1. PROTECTIVE FENCING SHALL BE LOCATED WHERE SHOWN ON PLANS. FENCE SHALL COMPLETELY ENCIRCLE TREE(S) AT THE DRIPLINE OR BEYOND. AVOID DRIVING POSTS OR STAKES INTO MAJOR ROOTS. FENCE MUST REMAIN UP THROUGHOUT PROJECT.
2. NO STOCKPILING OF MATERIALS, GRADE CHANGES, VEHICULAR TRAFFIC, OR STORAGE OF EQUIPMENT OR MACHINERY SHALL BE ALLOWED WITHIN THE LIMIT OF THE FENCING. PLEASE CALL ARBORIST FOR MITIGATION MEASURES IF FENCING MUST COME DOWN.
3. TREATMENT OF ROOTS EXPOSED DURING CONSTRUCTION: FOR ROOTS OVER 1" IN DIAMETER DAMAGED DURING CONSTRUCTION, MAKE A CLEAN STRAIGHT CUT TO REMOVE DAMAGED PORTION OF ROOT. ALL EXPOSED ROOTS SHALL BE TEMPORARILY COVERED WITH DAMP BURLAP WITH CONTINUOUS IRRIGATION, TO PREVENT DRYING. COVER WITH SOIL AS SOON AS POSSIBLE—3" OF MULCH RECOMMENDED.

S:\DSG\FORMS\TreeFencing 08/2009

TREE PROTECTION FENCING (TP C04)
NOT TO SCALE

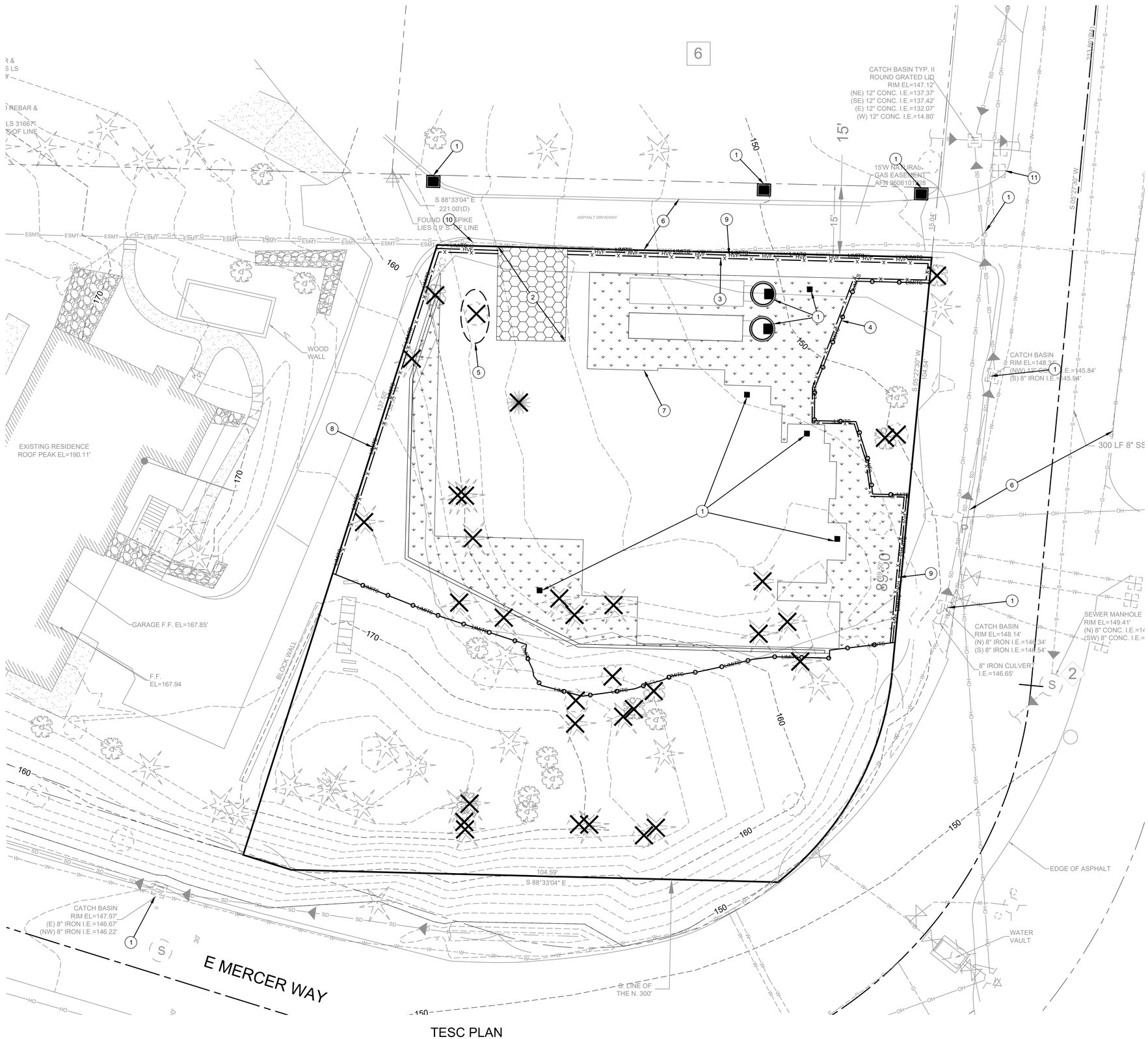

TESC PLAN
SCALE: 1" = 10'

NO.	DATE	BY	REVISION

BASE MAP/TOPOGRAPHY PROVIDED BY OTHERS. FACET CANNOT BE HELD LIABLE FOR ACCURACY. CONTRACTOR SHALL FIELD VERIFY GRADES, UTILITIES, AND ALL OTHER EXISTING FEATURES AND CONDITIONS. IF CONDITIONS ARE NOT AS SHOWN AND/OR PLANS ARE INCOMPLETE, CONTACT FACET PRIOR TO CONSTRUCTION.

FACET
P: 206.523.0024
www.facetnw.com
9706 4th Ave NE
Suite 300
Seattle, WA 98115
FEDERAL WAY | KIRKLAND | MOUNT VERNON | SEATTLE | SPOKANE | WHIDBEY ISLAND

BENJAMIN DIGIACOMO STATE OF WASHINGTON 24931 REGISTERED PROFESSIONAL ENGINEER
Digitally signed by Benjamin DiGiacomo
Date: 2025.06.05 17:09:35 -07'00'

CALL 811
2 BUSINESS DAYS BEFORE YOU DIG
(UNDERGROUND UTILITY LOCATIONS ARE APPROX.)

6427 E MERCER WAY

6427 E MERCER WAY
MERCER ISLAND, WA 98040
PROJECT No. 2501.0550.00

PERMIT PLAN

TESC PLAN

DATE: 6/5/2025

PLAN NUMBER:
C04

SHEET 4 OF 11

FILE LOCATION: Z:\SHARED\PROJECTS\ACTIVE\2025\01\2501.0550_CITIZEN DESIGN_6427 E MERCER WAY_MERCER ISLAND\DRAWINGS\CAD-BEST\ACTIVEFILES\427 E MERCER WAY_MERCER ISLAND.DWG - ORIGINAL SHEET SIZE: ARCH FULL BLEED D (36.00 X 24.00 INCHES) - LAST MODIFIED BY: ZOE POPOVICH
PRINCIPAL: BI PROJECT MANAGER: JR DESIGNED BY: ZP DRAWN BY: GS, CK CHECKED BY: BI

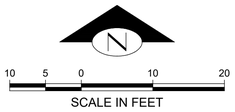

KEY NOTES:		
KEY	NOTE:	DETAIL/ SHEET
1	EXISTING CONTOUR	-
2	PROPOSED CONTOUR	-
3	SAWCUT AND MATCH EG	-
4	REPLACE EX BERM AT EDGE OF ASPHALT TO MAINTAIN FLOWLINE (4" TALL, 6" WIDE BERM)	-
5	5.0 FT ACCESS AND UTILITIES EASEMENT	-

GENERAL NOTE:
1. 2:1 MAX LANDSCAPE SLOPING PER GEOTECHNICAL REPORT

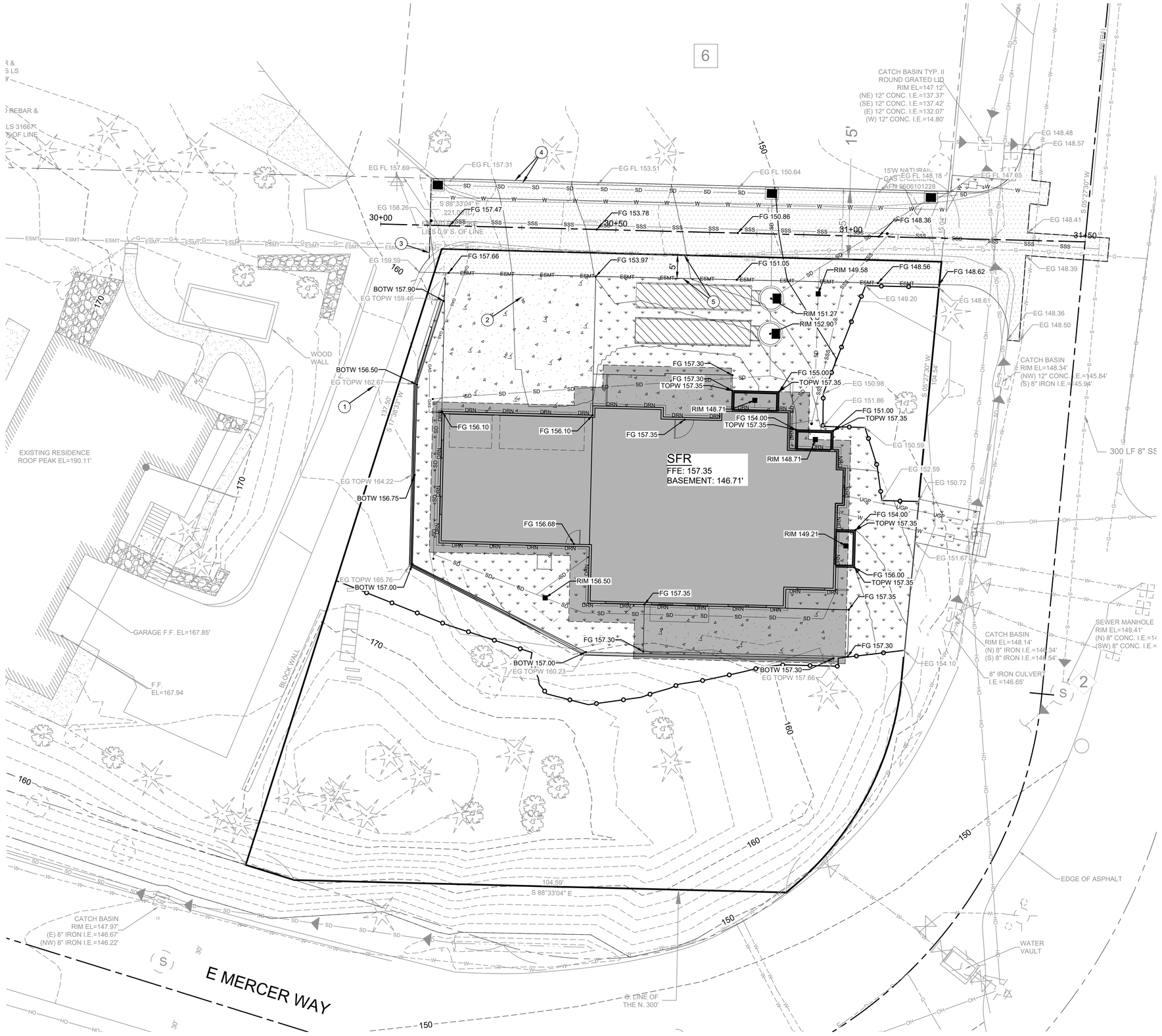

GRADING PLAN
SCALE: 1" = 10'

NO.	DATE	BY	REVISION

BASE MAP/TOPOGRAPHY PROVIDED BY OTHERS. FACET CANNOT BE HELD LIABLE FOR ACCURACY CONTRACTOR SHALL FIELD VERIFY GRADES, UTILITIES, AND ALL OTHER EXISTING FEATURES AND CONDITIONS. IF CONDITIONS ARE NOT AS SHOWN AND/OR PLANS NEED TO BE MODIFIED, CONTACT FACET PRIOR TO CONSTRUCTION.

FACET
P: 206.522.0024
www.facetnw.com
9706 4th Ave NE
Suite 300
Seattle, WA 98115
FEDERAL WAY | KIRKLAND | MOUNT VERNON | SEATTLE | SPOKANE | WHIDBEY ISLAND

BENJAMIN J. IDDINGS
STATE OF WASHINGTON
REGISTERED PROFESSIONAL ENGINEER
digitally signed by Ben Iddings
Date: 2025.06.05 17:09:50 -07'00'

CALL 811
2 BUSINESS DAYS
BEFORE YOU DIG
(UNDERGROUND UTILITY LOCATIONS ARE APPROX.)

6427 E MERCER WAY

6427 E MERCER WAY
MERCER ISLAND, WA 98040
PROJECT No. 2501.0550.00

PERMIT PLAN

GRADING PLAN

DATE: 6/5/2025
PLAN NUMBER:
C05
SHEET 5 OF 11

FILE LOCATION: Z:\SHARED\PROJECTS\ACTIVE\2025\01\2501.0550_CITIZEN DESIGN_6427 E MERCER WAY MERCER ISLAND\DRAWINGS\CAD-REVIT\ACTIVEFILE\6427 E MERCER WAY_MERCER ISLAND.DWG - ORIGINAL SHEET SIZE: ARCH FULL BLEED D (36.00 X 24.00 INCHES) - LAST MODIFIED BY: ZOE POPOVICH
PRINCIPAL: BI PROJECT MANAGER: JR DESIGNED BY: ZP DRAWN BY: GS, CK CHECKED BY: BI

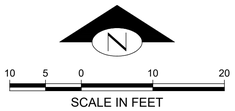

KEY NOTES:

KEY	NOTE	DETAIL/ SHEET
1	NEW BLIND TEE CONNECTION INTO EX STORM MAIN (SEE GRADING PROFILE - PRIVATE ROAD, THIS SHEET)	E/C09
2	TYPE 1 CB (SEE GRADING PROFILE - PRIVATE ROAD, THIS SHEET)	D/C09
3	TYPE 1 CB (SEE GRADING PROFILE - PRIVATE ROAD, THIS SHEET)	D/C09
4	8" SD @ 2.00% MIN (SEE GRADING PROFILE - PRIVATE ROAD, THIS SHEET)	G/C09
5	TYPE 1 CB (SEE GRADING PROFLIE - PRIVATE ROAD, THIS SHEET)	D/C09
6	AREA DRAIN W/ 2' MIN SUMP RIM 149.58 4" IE (W) 144.60 4" IE (S) 144.60	-
7	4" SOLID WALL PVC FOOTING DRAIN TIGHTLINE @ 2.00% MIN	-
8	18 LF 8" SD @ 2.00% MIN	G/C09
9	TYPE 2 CB (54Ø) W/ FLOW CONTROL STRUCTURE RIM 151.27 8" IE (N) 147.10 8" IE (S) 143.50 36" IE (W) 143.50 8" IE (NE) 143.50 (OUTLET) OVERFLOW ELEV 148.00	F/C09
10	8" SD @ ELEV 143.50	-
11	DETENTION FACILITY FACILITY DIMENSION: (2) 24.5'L X 5'Ø TOP OF FACILITY 148.00 DEAD STORAGE ELEV 143.50 BOTTOM OF FACILITY 143.00	C11
12	36" SD @ ELEV 143.50	-
13	4" WYE IE 151.35	-
14	AREA DRAIN RIM 148.71 4" IE 146.85	-
15	37 LF 8" SD @ 2.00% MIN	G/C09
16	TYPE 2 CB RIM 152.90 4" IE (S) 150.00 36" IE (W) 143.50 8" IE (N) 143.50	E/C09
17	16 LF 4" SD @ 2.00% MIN	G/C09
18	72 LF 4" SD @ 2.00% MIN	G/C09
19	4" SDCO RIM 156.29 4" IE 152.80	H/C10
20	PERIMETER FOOTING DRAIN: 4" PERFORATED PVC PIPE IN 3/4" WASHED ROCK WRAPPED IN FILTER FABRIC (TYP)	-
21	35 LF 4" SD @ 2.00% MIN	G/C09
22	4" SDCO RIM 156.85 4" IE 153.55	H/C10
23	26 LF 4" SD @ 2.00% MIN	G/C09
24	13 LF 4" SD @ 2.00% MIN	G/C09

25	AREA DRAIN RIM 156.50 4" IE (E) 154.15 4" IE (W) 154.15	-
26	67 LF 4" SD @ 2.00% MIN	G/C09
27	4" ROOF DOWNSPOUT TIGHTLINE W/ 1.5' MIN COVER @ 2.00% MIN SLOPE (TYP)	-
28	AREA DRAIN RIM 149.21 4" IE 147.45	-
29	WINDOW WELL AREA DRAINS TO TIGHTLINE INTO FOOTING DRAIN CONVEYANCE SYSTEM (TYP)	-
30	12 LF 8" SD @ 2.00% MIN	G/C09
31	6 LF 4" SD @ 2.00% MIN	G/C09

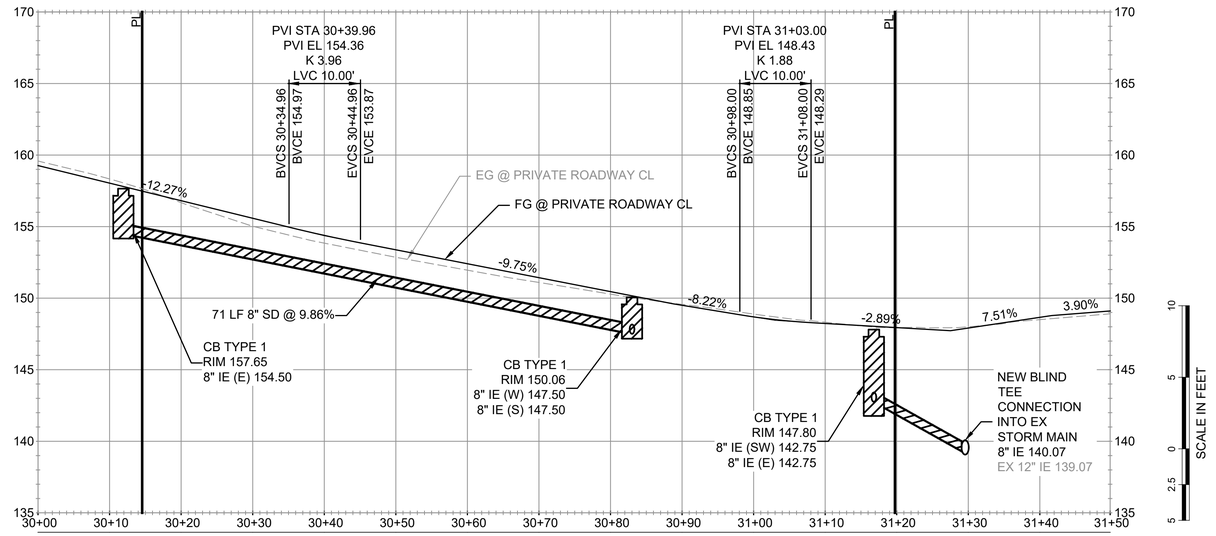

GRADING PROFILE - PRIVATE ROAD

SCALE: H: 1" = 10"; V: 1" = 5'

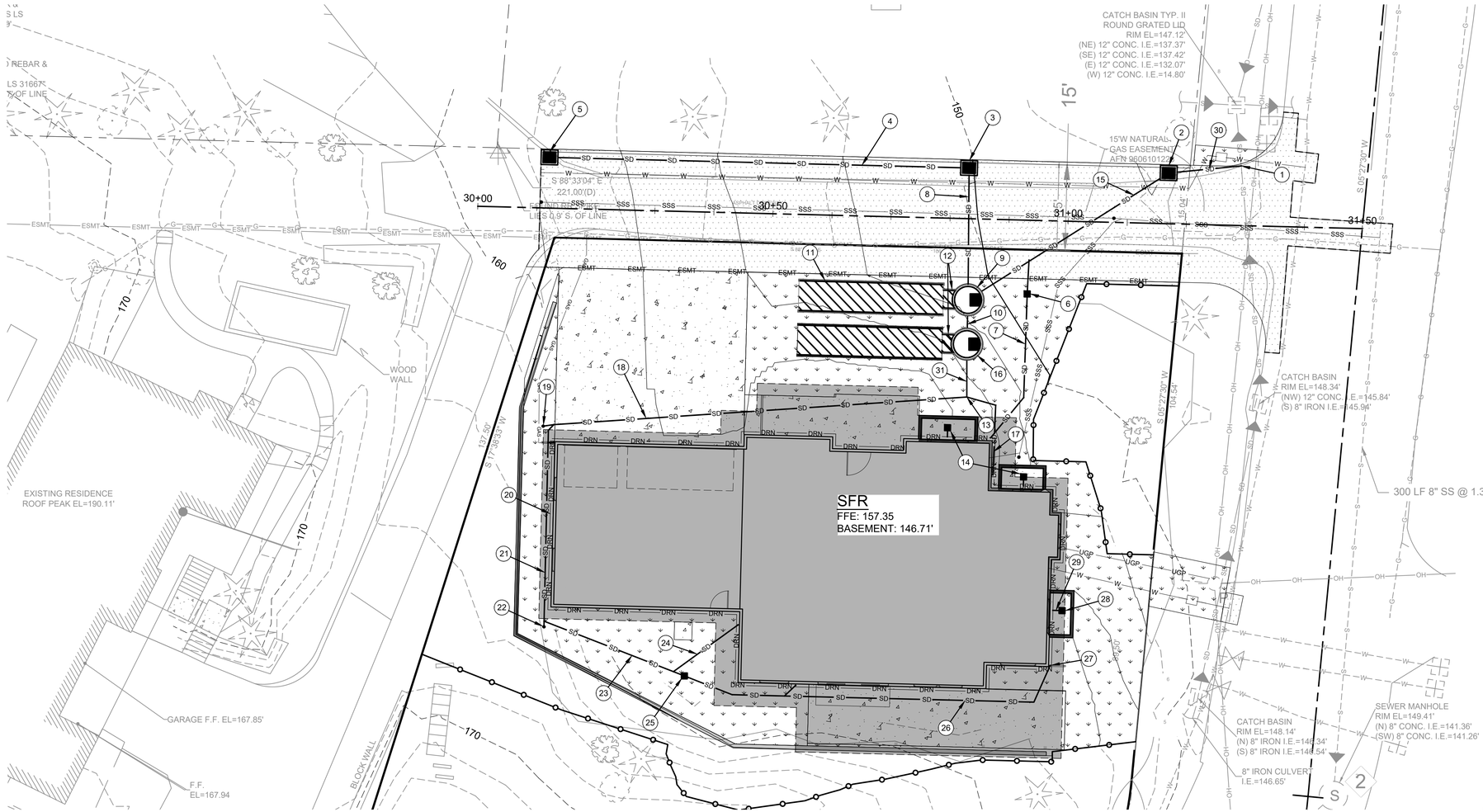

DRAINAGE PLAN

SCALE: 1" = 10'

BASE MAP/TOPOGRAPHY PROVIDED BY OTHERS. FACET CANNOT BE HELD LIABLE FOR ACCURACY. CONTRACTOR SHALL FIELD VERIFY GRADES, UTILITIES, AND ALL OTHER EXISTING FEATURES AND CONDITIONS. IF CONDITIONS ARE NOT AS SHOWN AND/OR PLANS NEED TO BE REVISED, CONTACT FACET PRIOR TO CONSTRUCTION.

NO.	DATE	BY	REVISION

FACET
P: 206.522.0024
www.facetnw.com
9706 4th Ave NE
Suite 300
Seattle, WA 98115
FEDERAL WAY | KIRKLAND | MOUNT VERNON | SEATTLE | SPOKANE | WHIDBEY ISLAND

BENJAMIN J. IDDINGS
STATE OF WASHINGTON
PROFESSIONAL ENGINEER
Digitally signed by BenIddings
Date: 2025.06.05 07:47:00 -07'00'

CALL 811
2 BUSINESS DAYS BEFORE YOU DIG
(UNDERGROUND UTILITY LOCATIONS ARE APPROX.)

6427 E MERCER WAY

6427 E MERCER WAY
MERCER ISLAND, WA 98040
PROJECT No. 2501.0550.00

PERMIT PLAN

DRAINAGE PLAN

DATE: 6/5/2025

PLAN NUMBER:

C06

SHEET 6 OF 11

FILE LOCATION: Z:\SHARED\PROJECTS\ACTIVE\2025\01\2501.0550_CITIZEN DESIGN_6427 E MERCER WAY MERCER ISLAND\DRAWINGS\CAD-REVIT\ACTIVEFILE\6427 E MERCER WAY_MERCER ISLAND.DWG - ORIGINAL SHEET SIZE: ARCH FULL BLEED D (36.00 X 24.00 INCHES) - LAST MODIFIED BY: ZOE POPOVICH
PRINCIPAL: BI PROJECT MANAGER: JR DESIGNED BY: ZP DRAWN BY: GS, CK CHECKED BY: BI

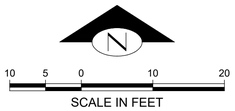

KEY NOTES:

KEY	NOTE:	DETAIL/ SHEET
1	NEW CONNECTION INTO EX SANITARY SEWER MAIN 6" IE 142.96 EX 8" IE 142.63	L/C10
2	45 LF 6" SSS @ 2.00% MIN	I/C10
3	6" SSSCO RIM 148.29 6" IE 143.86	K/C10
4	46 LF 6" SSS @ 2.00% MIN	I/C10
5	6" SSSCO RIM 151.85 6" IE 144.78	K/C10
6	5 LF 6" SSS @ 2.00% MIN	I/C10
7	6" SSS IE 145.00	J/C10
8	APPROX. LOCATION OF EX POWER POLE	-
9	APPROX. LOCATION OF UNDERGROUND POWER ROUTING TO PROPOSED SFR. DESIGN TO BE PROVIDED BY PSE.	-
10	NEW 1" POLY DOMESTIC SERVICE CONNECTION TO EX WATER MAIN	M,N/C10
11	NEW 1" WATER METER AND 1" POLY SERVICE LINE FOR SFR	M,N/C10
12	APPROX. LOCATION OF GAS SERVICE LINE. DESIGN TO BE PROVIDED BY PSE, COORDINATION BY OTHERS.	-
13	HEAT PUMP COMPRESSOR PAD	-
14	6" SSSCO RIM 157.93 6" IE 153.00 (FOR FUTURE DEVELOPMENT ON PARCEL #3024059001)	K/C10
15	90 LF 6" SSS @ 2.00% MIN	I/C10
16	CAP WATER SERVICE AT EDGE OF IMPROVEMENTS (FOR FUTURE DEVELOPMENT ON PARCEL #3024059001)	-

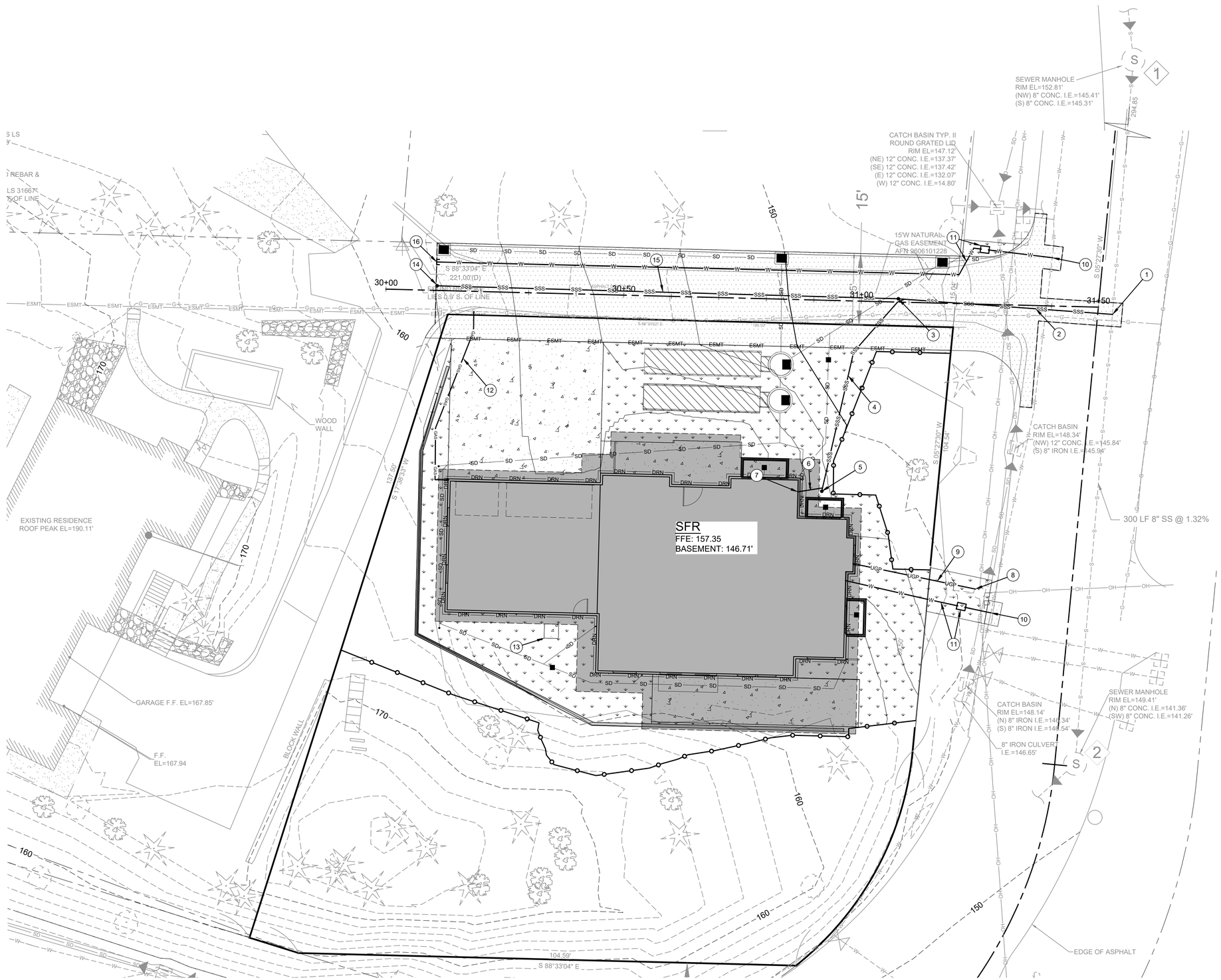

UTILITY PLAN
SCALE: 1" = 10'

FACET
P: 206.522.0024
www.facetnw.com
9706 4th Ave NE
Suite 300
Seattle, WA 98115
FEDERAL WAY | KIRKLAND | MOUNT VERNON | SEATTLE | SPOKANE | WHIDBEY ISLAND

NO.	DATE	BY	REVISION

BASE MAP/TOPOGRAPHY PROVIDED BY OTHERS. FACET CANNOT BE HELD LIABLE FOR ACCURACY. CONTRACTOR SHALL FIELD VERIFY GRADES, UTILITIES, AND ALL OTHER EXISTING FEATURES AND CONDITIONS. IF CONDITIONS ARE NOT AS SHOWN AND/OR PLANS ARE NEEDED, CONTACT FACET. AS SHOWN CONTACT FACET PRIOR TO CONSTRUCTION.

BENJAMIN DIGITALLY SIGNED BY BEN FIELDING
STATE OF WASHINGTON
DATE: 2025.08.05 17:10:42
REGISTERED PROFESSIONAL ENGINEER
STATE OF WASHINGTON
57202

CALL 811
2 BUSINESS DAYS BEFORE YOU DIG
(UNDERGROUND UTILITY LOCATIONS ARE APPROX.)

6427 E MERCER WAY
6427 E MERCER WAY
MERCER ISLAND, WA 98040
PROJECT No. 2501.0550.00

PERMIT PLAN

UTILITY PLAN

DATE: 6/5/2025

PLAN NUMBER:
C07
SHEET 7 OF 11

FILE LOCATION: Z:\SHARED\PROJECTS\ACTIVE\2025\01\2501.0550_CITIZEN DESIGN_6427 E MERCER WAY MERCER ISLAND\DRAWINGS\CAD-REVIT\ACTIVEFILE\6427 E MERCER WAY_MERCERISLAND.DWG - ORIGINAL SHEET SIZE: ARCH FULL BLEED D (36.00 X 24.00 INCHES) - LAST MODIFIED BY: ZOE POPOVICH
PRINCIPAL: BI PROJECT MANAGER: JR DESIGNED BY: ZP DRAWN BY: GS, CK CHECKED BY: BI

NOTES

1. Size the Below Inlet Grate Device (BIGD) for the storm water structure it will service.
2. The BIGD shall have a built-in high-flow relief system (overflow bypass).
3. The retrieval system must allow removal of the BIGD without spilling the collected material.
4. Perform maintenance in accordance with Standard Specification 8-01.3(15).

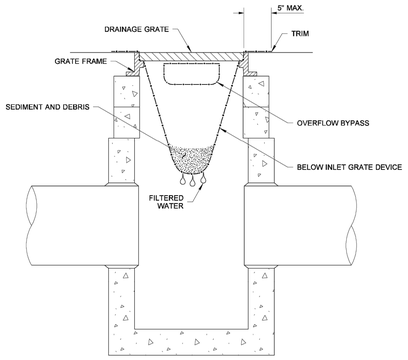

SECTION VIEW
NOT TO SCALE

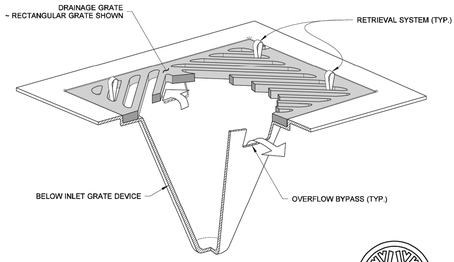

ISOMETRIC VIEW

STATE OF WASHINGTON
REGISTERED
LANDSCAPE ARCHITECT
MARK W. MAURER
CERTIFICATE NO. 000598

NOTE: THIS PLAN IS NOT A LEGAL ENGINEERING DOCUMENT BUT AN ELECTRONIC DUPLICATE. THE ORIGINAL, SIGNED BY THE ENGINEER AND APPROVED FOR PUBLICATION, IS KEPT ON FILE AT THE WASHINGTON STATE DEPARTMENT OF TRANSPORTATION. A COPY MAY BE OBTAINED UPON REQUEST.

STORM DRAIN INLET PROTECTION

STANDARD PLAN I-40.20-00

SHEET 1 OF 1 SHEET

APPROVED FOR PUBLICATION

Pasco Bakotich III — STATE DESIGN ENGINEER — *09-20-07* — DATE

Washington State Department of Transportation

STORM DRAIN INLET PROTECTION
WSDOT PLAN NO. I-40.20-20
NTS
A C04

NOT TO SCALE

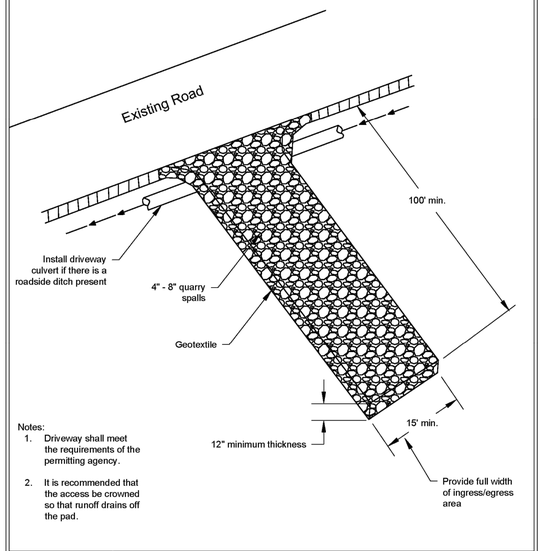

Notes:
1. Driveway shall meet the requirements of the permitting agency.
2. It is recommended that the access be crowned so that runoff drains off the pad.

DEPARTMENT OF ECOLOGY
State of Washington

Stabilized Construction Access

Revised June 2018

Please see *http://www.ecy.wa.gov/copyright.html* for copyright notice including permissions, limitation of liability, and disclaimer.

STABILIZED CONSTRUCTION ENTRANCE
DOE PLAN
NTS
B C04

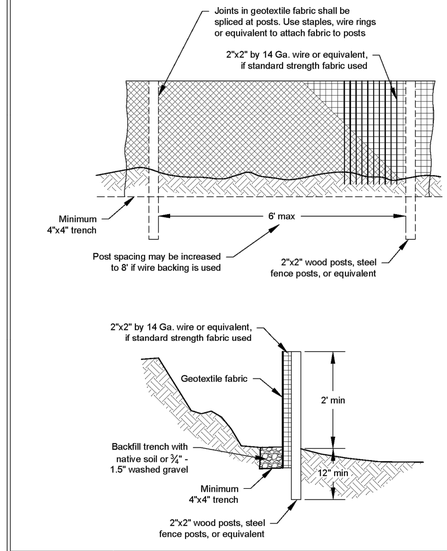

NOT TO SCALE

DEPARTMENT OF ECOLOGY
State of Washington

Silt Fence

Revised July 2017

Please see *http://www.ecy.wa.gov/copyright.html* for copyright notice including permissions, limitation of liability, and disclaimer.

SILT FENCE
DOE PLAN
NTS
C C04

DETAILS

NO.	DATE	BY	REVISION

BASE MAP/TOPOGRAPHY PROVIDED BY OTHERS. FACET CANNOT BE HELD LIABLE FOR ACCURACY. CONTRACTOR SHALL FIELD VERIFY GRADES, UTILITIES, AND ALL OTHER EXISTING FEATURES AND CONDITIONS. IF CONDITIONS ARE NOT AS SHOWN AND/OR PLANS ARE INCOMPLETE OR UNCLEAR, CONTACT FACET PRIOR TO CONSTRUCTION.

FACET
P: 206.522.0024
www.facetnw.com
9706 4th Ave NE
Suite 300
Seattle, WA 98115
FEDERAL WAY | KIRKLAND | MOUNT VERNON | SEATTLE | SPOKANE | WHIDBEY ISLAND

Digitally signed by Benjamin Liddle
Date: 2025.09.05 17:10:52 -07'00'

CALL 811
2 BUSINESS DAYS BEFORE YOU DIG
(UNDERGROUND UTILITY LOCATIONS ARE APPROX.)

6427 E MERCER WAY

6427 E MERCER WAY
MERCER ISLAND, WA 98040
PROJECT No. 2501.0550.00

PERMIT PLAN

DETAILS

DATE: 6/5/2025

PLAN NUMBER:

C08

SHEET 8 OF 11

FILE LOCATION: Z:\SHARED\PROJECTS\ACTIVE\2025\01\2501.0550_CITIZEN DESIGN_6427 E MERCER WAY MERCER ISLAND\DRAWINGS\CAD-REVIT\ACTIVEFILE\6427 E MERCER WAY_MERCER ISLAND.DWG - ORIGINAL SHEET SIZE: ARCH FULL BLEED D (36.00 X 24.00 INCHES) - LAST MODIFIED BY: ZOE POPOVICH
PRINCIPAL: BI PROJECT MANAGER: JR DESIGNED BY: ZP DRAWN BY: GS_CK CHECKED BY: BI

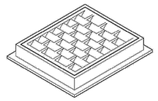

FRAME AND VANED GRATE

PIPE ALLOWANCES	
PIPE MATERIAL	MAXIMUM INSIDE DIAMETER (INCHES)
REINFORCED OR PLAIN CONCRETE	12"
ALL METAL PIPE	15"
CPSSP ✱ (STD. SPEC. SECT. 9-05.20)	12"
SOLID WALL PVC (STD. SPEC. SECT. 9-05.12(1))	15"
PROFILE WALL PVC (STD. SPEC. SECT. 9-05.12(2))	15"

✱ CORRUGATED POLYETHYLENE STORM SEWER PIPE

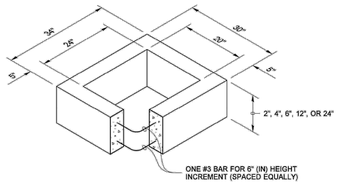

RECTANGULAR ADJUSTMENT SECTION

NOTES

1. As acceptable alternatives to the rebar shown in the **PRECAST BASE SECTION**, fibers (placed according to the Standard Specifications), or wire mesh having a minimum area of 0.12 square inches per foot shall be used with the minimum required rebar shown in the **ALTERNATIVE PRECAST BASE SECTION**. Wire mesh shall not be placed in the knockouts.
2. The knockout diameter shall not be greater than 20" (in). Knockouts shall have a wall thickness of 2" (in) minimum to 2.5" (in) maximum. Provide a 1.5" (in) minimum gap between the knockout wall and the outside of the pipe. After the pipe is installed, fill the gap with joint mortar in accordance with **Standard Specification Section 9-04.3**.
3. The maximum depth from the finished grade to the lowest pipe invert shall be 5' (ft).
4. The frame and grate may be installed with the flange down, or integrally cast into the adjustment section with flange up.
5. The Precast Base Section may have a rounded floor, and the walls may be sloped at a rate of 1 : 24 or steeper.
6. The opening shall be measured at the top of the **Precast Base Section**.
7. All pickup holes shall be grouted full after the basin has been placed.

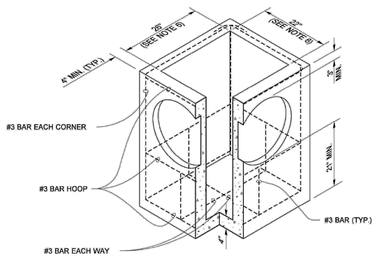

PRECAST BASE SECTION

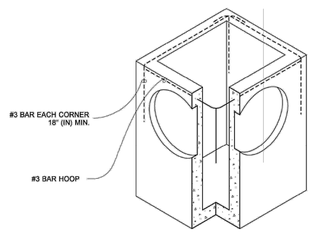

(SEE NOTE 1)

ALTERNATIVE PRECAST BASE SECTION

Julie Heilman
2020.09.01 07:52:50 -07'00'

CATCH BASIN TYPE 1

STANDARD PLAN B-5.20-03

SHEET 1 OF 1 SHEET

APPROVED FOR PUBLICATION
Roark, Steve Digitally signed by Roark, Steve
Date: 2020.09.08 09:45:23 -07'00'
STATE DESIGN ENGINEER
Washington State Department of Transportation

CATCH BASIN TYPE 1
WSDOT PLAN NO. B-5.20-03
NTS
D
C06

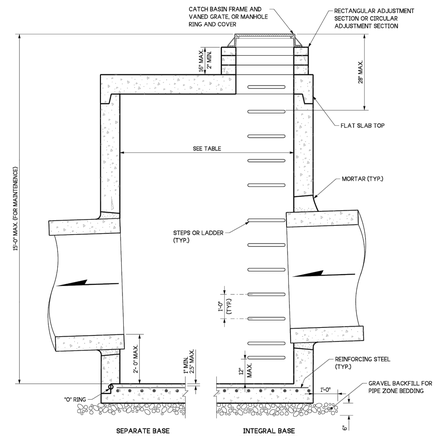

NOTES:

1. No steps are required when height is 4' or less.
2. The bottom of the precast catch basin may be sloped to facilitate cleaning.
3. The rectangular frame and grate may be installed with the flange up or down. The frame may be cast into the adjustment section.
4. Knockouts shall have a wall thickness of 2" (in) minimum to 2.5" (in) maximum. Provide a 1.5" (in) minimum gap between the knockout wall and the outside of the pipe. After the pipe is installed, fill the gap with joint mortar in accordance with **Standard Specification Section 9-04.3**.
5. Pipe allowances will vary depending on the pipe material used. Contact the Region Hydraulics Engineer for assistance.

CATCH BASIN DIMENSIONS				
CATCH BASIN DIAMETER	MIN. WALL THICKNESS	MIN. BASE THICKNESS	MAXIMUM KNOCKOUT SIZE	MINIMUM DISTANCE BETWEEN KNOCKOUTS
48"	4"	6"	36"	8"
54"	4.5"	8"	42"	8"
60"	5"	8"	48"	8"
72"	6"	8"	60"	12"
84"	8"	12"	72"	12"
96"	8"	12"	84"	12"
120"	10"	12"	96"	12"
144"	12"	12"	108"	12"

PIPE ALLOWANCES					
CATCH BASIN DIAMETER	PIPE MATERIAL WITH MAXIMUM INSIDE DIAMETER				
	CONCRETE	ALL METAL	CPSSP ① PP ④	SOLID WALL PVC ②	PROFILE WALL PVC ③
48"	24"	30"	24"	30"	30"
54"	30"	36"	30"	36"	36"
60"	36"	42"	36"	42"	42"
72"	42"	54"	42"	48"	48"
84"	54"	60"	54"	48"	48"
96"	60"	72"	60"	48"	48"
120"	66"	84"	60"	48"	48"
144"	78"	96"	60"	48"	48"

① Corrugated Polyethylene Storm Sewer Pipe (See Standard Specification Section 9-05.20)
② (See Standard Specification Section 9-05.12(1))
③ (See Standard Specification Section 9-05.12(2))
④ Polypropolyne Pipe (See Standard Specification Section 9-05.24)

Aug 23, 2023

CATCH BASIN TYPE 2

STANDARD PLAN B-10.20-03

SHEET 1 OF 1 SHEET

APPROVED FOR PUBLICATION
Aug 23, 2023
STATE DESIGN ENGINEER
Washington State Department of Transportation

CATCH BASIN TYPE 2
WSDOT PLAN NO. B-10.20-03
NTS
E
C06

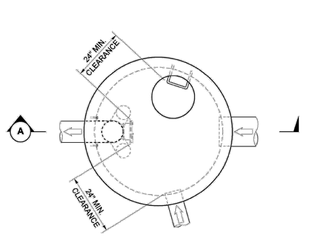

PLAN VIEW

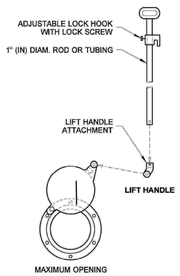

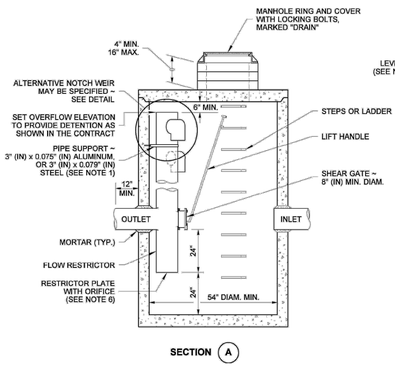

SECTION A

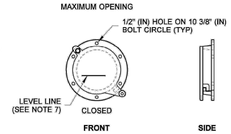

SHEAR GATE DETAILS

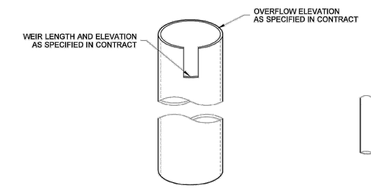

NOTCH WEIR DETAIL

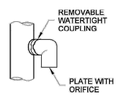

ELBOW DETAIL

NOTES

1. The pipe supports and the flow restrictor shall be constructed of the same material and be anchored at a maximum spacing of 36" (in). Attach the pipe supports to the manhole with 5/8" (in) stainless steel expansion bolts or embed the supports into the manhole wall 2" (in).
2. The vertical riser stem of the flow restrictor shall be the same diameter as the horizontal outlet pipe with a minimum diameter of 12" (in).
3. The flow restrictor shall be fabricated from one of the following materials:
   0.060" (in) Corrugated Aluminum Alloy Drain Pipe
   0.064" (in) Corrugated Galvanized Steel Drain Pipe with Treatment 1
   0.064" (in) Corrugated Aluminized Steel Drain Pipe
   0.060" (in) Aluminum alloy flat sheet, in accordance with **ASTM B 209, 5052 H32 or EPS** High Density Polyethylene Storm Sewer Pipe
4. The frame and ladder or steps are to be offset so that: the shear gate is visible from the top; the climb-down space is clear of the riser and gate; the frame is clear of the curb.
5. The multi-orifice elbows may be located as shown, or all placed on one side of the riser to assure ladder clearance. The size of the elbows and their placement shall be specified in the Contract.
6. Restrictor plate with orifice as specified in the Contract. The opening is to be cut round and smooth.
7. The shear gate shall be made of aluminum alloy in accordance with **ASTM B 26 and ASTM B 275**, designation **ZG32A**; or cast iron in accordance with **ASTM A 48, Class 30B**.
   The lift handle shall be made of a similar metal to the gate (to prevent galvanic corrosion), it may be of solid rod or hollow tubing, with adjustable hook as required.
   A neoprene rubber gasket is required between the riser mounting flange and the gate flange.
   Install the gate so that the level-line mark is level when the gate is closed.
   The mating surfaces of the lid and the body shall be machined for proper fit.
   All shear gate bolts shall be stainless steel.
8. The shear gate maximum opening shall be controlled by limited hinge movement, a stop tab, or some other device.
9. Alternative shear gate designs are acceptable if material specifications are met.

Aug 17, 2021

CATCH BASIN TYPE 2 WITH FLOW RESTRICTOR

STANDARD PLAN B-10.40-02

SHEET 1 OF 1 SHEET

APPROVED FOR PUBLICATION
Aug 17, 2021
STATE DESIGN ENGINEER
Washington State Department of Transportation

CATCH BASIN TYPE 2
WITH FLOW RESTRICTOR
WSDOT PLAN NO. B-10.40-02
NTS
F
C06

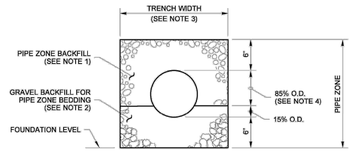

CONCRETE AND DUCTILE IRON PIPE

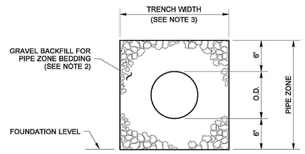

THERMOPLASTIC PIPE

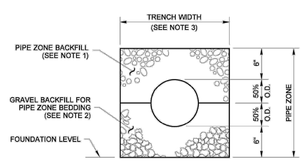

METAL AND STEEL RIB
REINFORCED POLYETHYLENE PIPE

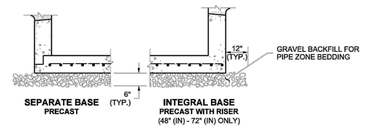

TYPICAL CONDITION FOR DRAINAGE STRUCTURE

THIS DETAIL APPLIES TO **STANDARD PLANS B-5.20, B-5.40, B-5.60, B-10.20, B-10.40, B-15.20,B-15.40, B-15.60, B-25.20, B-25.60, B-35.20** AND **B-35.40.**

NOTES

1. See **Standard Specifications Section 7-08.3(3)** for Pipe Zone Backfill.
2. See **Standard Specifications Section 9-03.12(3)** for Gravel Backfill for Pipe Zone Bedding.
3. See **Standard Specifications Section 2-09.4** for Measurement of Trench Width.
4. For sanitary sewer installation, concrete pipe shall be imbedded to spring line.

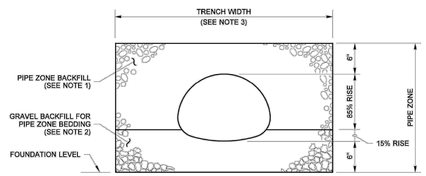

PIPE ARCHES

CLEARANCE BETWEEN PIPES FOR MULTIPLE INSTALLATIONS		
PIPE	SIZE	MINIMUM DISTANCE BETWEEN BARRELS
CIRCULAR PIPE (DIAMETER)	UP TO 48"	24"
	48" AND LARGER	DIAMETER/2 OR 36" WHICHEVER IS LESS
METAL PIPE ARCH (SPAN)		

Aug 17, 2021

PIPE ZONE BEDDING AND BACKFILL

STANDARD PLAN B-55.20-03

SHEET 1 OF 1 SHEET

APPROVED FOR PUBLICATION
Aug 17, 2021
STATE DESIGN ENGINEER
Washington State Department of Transportation

PIPE ZONE BEDDING AND BACKFILL
WSDOT PLAN NO. B-55.20-03
NTS
G
C06

DETAILS

NO.	DATE	BY	REVISION

BASE MAP/TOPOGRAPHY PROVIDED BY OTHERS. FACET CANNOT BE HELD LIABLE FOR ACCURACY. CONTRACTOR SHALL FIELD VERIFY GRADES, UTILITIES, AND ALL OTHER EXISTING FEATURES AND CONDITIONS. IF CONDITIONS ARE NOT AS SHOWN AND/OR PLANS ARE INCOMPLETE, CONTACT DESIGNER. FACET PRIOR TO CONSTRUCTION.

FACET
P: 206.522.0024
www.facetnw.com
9706 4th Ave NE
Suite 300
Seattle, WA 98115
FEDERAL WAY | KIRKLAND | MOUNT VERNON | SEATTLE | SPOKANE | WHIDBEY ISLAND

BENJAMIN J. JOHNS — STATE OF WASHINGTON — 21819 — REGISTERED PROFESSIONAL ENGINEER
Digitally signed by Benjamin J. Johns
Date: 2025.06.05 14:07:35 -07'00'

CALL 811
2 BUSINESS DAYS
BEFORE YOU DIG
(UNDERGROUND UTILITY LOCATIONS ARE APPROX.)

6427 E MERCER WAY

6427 E MERCER WAY
MERCER ISLAND, WA 98040
PROJECT No. 2501.0550.00

PERMIT PLAN

DETAILS

DATE: 6/5/2025

PLAN NUMBER:

C09

SHEET 9 OF 11

FILE LOCATION: Z:\SHARED\PROJECTS\ACTIVE\2025\01\2501.0550_CITIZEN DESIGN_6427 E MERCER WAY_MERCER ISLAND\DRAWINGS\CAD-BIM\TA\CTIVE\FILE\6427 E MERCER WAY_MERCER ISLAND.DWG - ORIGINAL SHEET SIZE: ARCH FULL BLEED D (36.00 X 24.00 INCHES) - LAST MODIFIED BY: ZOE POPOVICH
PRINCIPAL: BI PROJECT MANAGER: JR DESIGNED BY: ZP DRAWN BY: GS, CK CHECKED BY: BI

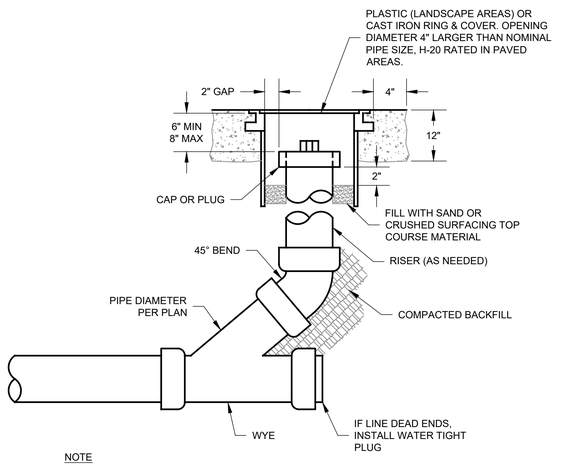

NOTE

CAST IRON COVER SHALL READ "SEWER", "STORM" OR "CO."

CLEANOUT DETAIL
COMI PLAN NO. X-XX
NTS
H C06

BEDDING FOR RIGID PIPE MATERIAL

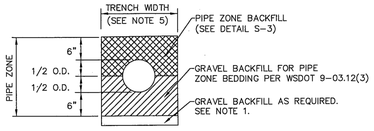

BEDDING FOR FLEXIBLE PIPE MATERIAL

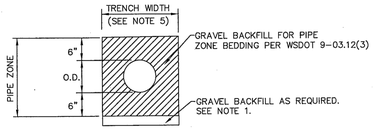

NOTES

1. EXCAVATE UNSTABLE MATERIAL DOWN TO FIRM SOIL. REPLACE WITH GRAVEL BACKFILL PER WSDOT 9-03.12(3) AS DIRECTED BY THE CITY ENGINEER.
2. PROVIDE UNIFORM SUPPORT UNDER BARREL.
3. HAND TAMP UNDER HAUNCHES.
4. COMPACT BEDDING AND BACKFILL MATERIAL TO 95% MAX. DENSITY EXCEPT DIRECTLY OVER PIPE. HAND TAMP ONLY UNTIL MINIMUM 6" ABOVE TOP OF PIPE.
5. 30" MAXIMUM TRENCH WIDTH FOR PIPE UP TO AND INCLUDING 12", FOR PIPE LARGER THAN 12", USE O.D. PLUS 16".

CITY OF MERCER ISLAND
STANDARD DETAILS
SEWER
PIPE BEDDING

6-5-2009	NO SCALE	S-4

REV DATE | APPROVED

PIPE BEDDING DETAIL
COMI PLAN NO. S-4
NTS
I C07

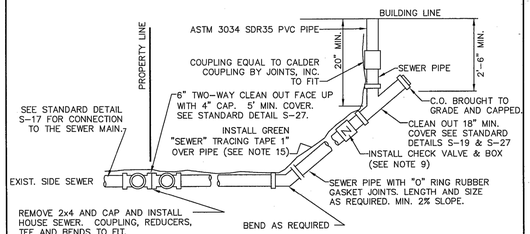

BUILDING CONNECTION

NOTES

1. ELBOWS SHALL NOT BE GREATER THAN 45 DEGREES.
2. CLEAN OUT IS REQUIRED FOR EACH PIPE LENGTH GREATER THAN 100' AND FOR EACH 90° ACCUMULATED ELBOW/100'.
3. ALL HOUSE PLUMBING OUTLETS MUST BE CONNECTED TO THE SEWER. NO DOWN SPOUTS OR STORM DRAINAGE MAY BE CONNECTED TO THE SEWER SYSTEM.
4. 18" MINIMUM COVERAGE OVER PIPE.
5. LAY PIPE IN STRAIGHT LINE BETWEEN BENDS. MAKE ALL CHANGES IN GRADE OR LINE WITH $\frac{1}{8}$ BEND OR WYE. 90° CHANGE WITH 1/8 BEND AND WYE.
6. 4" SEWER PIPE MINIMUM SIZE ON PROPERTY. 2% MINIMUM GRADE.
7. ALL CONSTRUCTION SHALL BE IN ACCORDANCE WITH CURRENT SEWER ORDINANCES.
8. ALL CONSTRUCTION REQUIRES A PLAN SHOWING PROPERTY AND DIMENSIONS AND COMPLETION OF SIDE SEWER APPLICATION AND MAINTENANCE AGREEMENT, AS NEEDED.
9. BACK WATER VALVE (CHECK VALVE) IS REQUIRED:
   A. IF CONNECTED TO A SHARED SIDE SEWER.
   B. IF CONNECTION AT HOUSE IS LOWER THAN BOTH UPSTREAM AND DOWNSTREAM MANHOLE.
   C. SEE S-23 & S-24 FOR LAKE LINE REQUIREMENTS.
10. AS-BUILT DRAWING SHOWING LOCATION OF SIDE SEWER & ALL BENDS, C.O. ETC., IN RELATION TO THE HOUSE IS REQUIRED AFTER INSPECTION & INSTALLATION. SEE STANDARD DETAIL S-38 FOR A TYPICAL "AS BUILT".
11. THE MINIMUM PIPE SIZE FOR SIDE SEWERS SHALL BE:
    6" – WITHIN THE PUBLIC RIGHT-OF-WAY.
    4" – SINGLE FAMILY RESIDENCES.
    6" – 2 TO 6 SINGLE FAMILY RESIDENCES.
    6" – BUILDINGS OTHER THAN SINGLE FAMILY RESIDENCES.
12. UTILITY PIPE TRACER TAPE SHALL BE DETECTABLE BELOW GROUND SURFACE, COLOR CODED, WITH UTILITY NAME PRINTED ON TAPE. CONDUCTIVE WARNING TAPE REQUIRED OVER ALL WATER PIPE. TAPE SHALL BE MANUFACTURER'S STANDARD PERMANENT, BRIGHT-COLORED, CONTINUOUS PRINTED PLASTIC TAPE, ALUMINUM BACKED, INTENDED FOR DIRECT-BURIAL SERVICE. TAPE SHALL BE NOT LESS THAN 6" WIDE X 4 MILS THICK.

CITY OF MERCER ISLAND
STANDARD DETAILS
SEWER
HOUSE SEWER CONNECTION

6-5-2009	NO SCALE	S-18

REV DATE | APPROVED

HOUSE SEWER CONNECTION
COMI PLAN NO. S-18
NTS
J C07

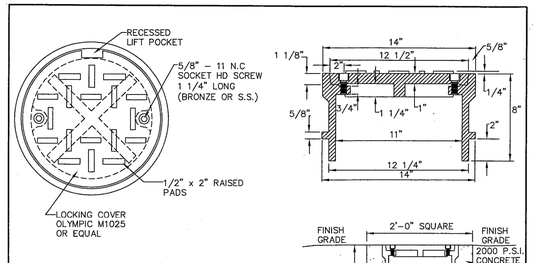

FOR PVC PIPE

NOTES

1. SEE S-27 FOR INSTALLATION DETAILS.

CITY OF MERCER ISLAND
STANDARD DETAILS
SEWER
CLEAN OUT DETAIL

6-5-2009	NO SCALE	S-19

REV DATE | APPROVED

CLEANOUT DETAIL
COMI PLAN NO. S-19
NTS
K C07

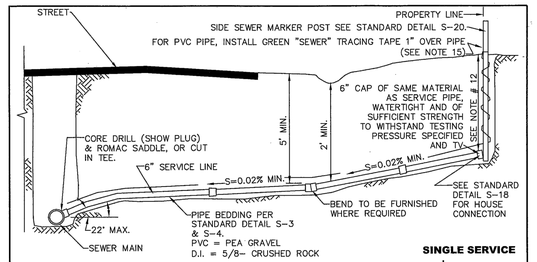

SINGLE SERVICE

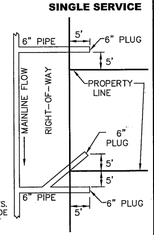

DOUBLE SERVICE

NOTES

1. ELBOWS SHALL NOT BE GREATER THAN 45 DEGREES.
2. CLEAN OUT IS REQUIRED FOR EACH PIPE LENGTH GREATER THAN 100' AND FOR EACH 90° ACCUMULATED ELBOW/100'.
3. RIGHT-OF-WAY RESTORATION SHALL MATCH OR EXCEED THE ORIGINAL CONDITION AND BE IN ACCORDANCE WITH CITY STANDARDS.
4. ALL TRENCH BACKFILL IN PUBLIC RIGHT-OF-WAY OR ROADWAY AREAS SHALL BE CRUSHED SURFACING PER WSDOT 9-09.9(3) OR BANK RUN GRAVEL PER WSDOT 9-03.19, COMPACTED IN 6" LIFTS OR MAY BE CDF WHEN DIRECTED BY THE CITY ENGINEER (SEE DETAIL S-3).
5. LAY PIPE IN STRAIGHT LINE BETWEEN BENDS. MAKE ALL CHANGES IN GRADE OR LINE WITH 1/8 BEND OR WYE. 90° CHANGE WITH 1/8 BEND AND WYE.
6. 6" SEWER PIPE MINIMUM SIZE IN RIGHT-OF-WAY, AND ELSEWHERE AS DIRECTED BY ENGINEER. 2% MIN. GRADE (UNLESS DIRECTED BY ENGINEER), 50% MAXIMUM.
7. ALL A.C. MAINS TO BE TAPPED IN ACCORDANCE WITH WAC 296-62-00775 STATE/FEDERAL GUIDELINES AND CERTIFICATION.
8. CONSTRUCTION IN RIGHT-OF-WAY MUST BE DONE BY A REGISTERED AND LICENSED CONTRACTOR.
9. ALL CONSTRUCTION SHALL BE IN ACCORDANCE WITH CURRENT CITY SEWER ORDINANCES.
10. WHERE CITY ENGINEER ALLOWS SIDE SEWER CONNECTIONS TO MANHOLE, INVERT OF SIDE SEWER SHALL BE EQUAL TO OR ABOVE MAIN SEWER CROWN, BUT NOT TO EXCEED 18" ABOVE INVERT OF MAIN SEWER.
11. UNLESS OTHERWISE INDICATED ON PLAN, SIDE SEWER SHALL BE MIN. OF 6' DEEP AT PROPERTY LINE, OR 5' LOWER THAN THE LOWEST ELEVATION, WHICH EVER IS LOWER.
12. ALL PIPE MATERIALS NOT TO STANDARDS WILL BE ABANDONED AND REPLACED WITH DUCTILE IRON OR PVC PIPE OF THE SAME SIZE.
13. IF A BUILDING SEWER IS TO SERVE MORE THAN ONE PROPERTY, BY JOINT AGREEMENT OF THE OWNERS, AN APPROVED EASEMENT INSURING THAT ALL PROPERTIES INVOLVED SHALL HAVE PERPETUAL USE OF THE SIDE SEWER, HAVING PROVISIONS FOR OPERATION, MAINTENANCE, RECONSTRUCTION AND FOR ACCESS FOR REPAIR PURPOSES, SHALL BE SIGNED BY THE OWNERS. THIS EASEMENT SHALL BE RECORDED WITH THE COUNTY AUDITOR. A SIX INCH (MINIMUM) DIAMETER PIPE SHALL BE USED FOR THE COMMON LINE AND A SIX INCH CLEANOUT EXTENDING TO WITHIN 12 INCHES OF THE GROUND SURFACE SHALL BE PROVIDED AT THE WYE WHERE THE UPPER GRADE CONNECTIONS ARE MADE. BACKWATER VALVES SHALL BE INSTALLED ON SERVICE LINES UPSTREAM OF THE CONNECTION TO THE SHARED SIDE SEWER.
14. THE CITY ENGINEER MAY REQUIRE BACKWATER VALVES ON SIDE SEWERS WHEN DEEMED NECESSARY. THE EFFECTIVE OPERATION AND MAINTENANCE OF ANY BACKWATER VALVE SHALL BE THE RESPONSIBILITY OF THE OWNER OF THE SIDE SEWER.
15. UTILITY PIPE TRACER TAPE SHALL BE DETECTABLE BELOW GROUND SURFACE, COLOR CODED, WITH UTILITY NAME PRINTED ON TAPE. CONDUCTIVE WARNING TAPE REQUIRED OVER ALL WATER PIPE. TAPE SHALL BE MANUFACTURER'S STANDARD PERMANENT, BRIGHT-COLORED, CONTINUOUS PRINTED PLASTIC TAPE, ALUMINUM BACKED, INTENDED FOR DIRECT-BURIAL SERVICE. TAPE SHALL BE NOT LESS THAN 6" WIDE X 4 MILS THICK.

CITY OF MERCER ISLAND
STANDARD DETAILS
SEWER
SIDE SEWER CONNECTION AND STUB

6-5-2009	NO SCALE	S-17

REV DATE | APPROVED

SIDE SEWER CONNECTION AND STUB
COMI PLAN NO. S-17
NTS
L C07

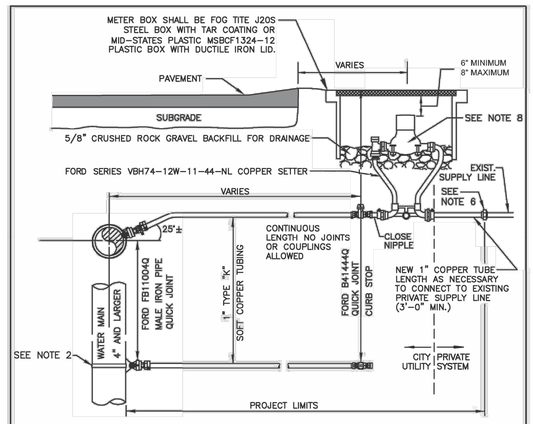

NOTES

1. WATER SERVICES SHALL COMPLY WITH THE REDUCTION OF LEAD IN DRINKING WATER ACT DATED 01/04/2014.
2. ON EXISTING WATER MAINS USE NYLON COATED D.I. SADDLE WITH STAINLESS STEEL DOUBLE STRAPS, ROMAC 202NS, OR APPROVED EQUAL.
3. MINIMUM DISTANCE BETWEEN CORP STOPS SHALL BE 18". MINIMUM DISTANCE BETWEEN TAPS, BETWEEN CORP STOP AND PIPE ENDS SHALL BE 24", ALL HORIZONALLY STAGGERED.
4. PLASTIC METER BOXES SHALL NOT BE INSTALLED WITHIN ROADWAY, SIDEWALK, OR DRIVEWAYS.
5. UPON CITY ENGINEER'S APPROVAL, METER BOXES ARE ALLOWED TO BE INSTALLED IN PORTLAND CEMENT CONCRETE PAVEMENT OR SIDEWALK.
6. WHEN CONNECTING TO EXISTING PRIVATE SUPPLY LINE CONTAINING FERROUS METAL, PROVIDE INSULATING COUPLING (DB SERIES WITH C21 SERIES ADAPTERS) AND PROVIDE REDUCER AS NECESSARY TO MATCH EXISTING PRIVATE SUPPLY LINE DIAMETER.
7. SERVICE LINE SHALL BE PERPENDICULAR TO THE WATER MAIN AND STRAIGHT TO WATER METER, UNLESS OTHERWISE APPROVED BY CITY ENGINEER. PROVIDE WINDING SLACK IN THE SERVICE LINE BETWEEN THE MAIN AND WATER METER.
8. WATER METER SUPPLIED BY CITY.
9. ALL FITTINGS TO BE BRASS COMPRESSION TYPE, FORD QUICK JOINT OR EQUAL.
10. NO SERVICE CONNECTIONS BETWEEN BLOW-OFF AND END OF MAIN.

CITY OF MERCER ISLAND
STANDARD DETAILS
WATER
1" WATER METER INSTALLATION

05-02-2023	NO SCALE	W-13

REV DATE | APPROVED

1" WATER METER INSTALLATION
COMI PLAN NO. W-13
NTS
M C07

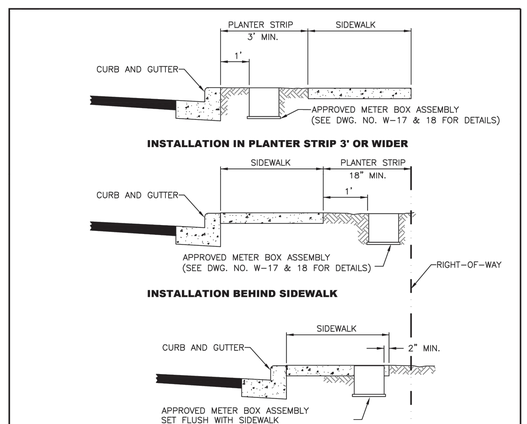

CITY OF MERCER ISLAND
STANDARD DETAILS
WATER
WATER METER PLACEMENT

3-20-2006	NO SCALE	W-16

REV DATE | APPROVED

WATER METER PLACEMENT
COMI PLAN NO. W-16
NTS
N C07

DETAILS

NO.	DATE	BY	REVISION

BASE MAP/TOPOGRAPHY PROVIDED BY OTHERS. FACET CANNOT BE HELD LIABLE FOR ACCURACY. CONTRACTOR SHALL FIELD VERIFY GRADES, UTILITIES, AND ALL OTHER EXISTING FEATURES AND CONDITIONS. IF CONDITIONS ARE NOT AS SHOWN AND/OR PLANS ARE NOT CONSTRUCTABLE AS SHOWN, CONTACT FACET PRIOR TO CONSTRUCTION.

FACET
9706 4th Ave NE
Suite 300
Seattle, WA 98115
P: 206.522.0024
www.facetnw.com
FEDERAL WAY | KIRKLAND | MOUNT VERNON | SEATTLE | SPOKANE | WHIDBEY ISLAND

BENJAMIN J. IDDINGS
STATE OF WASHINGTON
21014
REGISTERED PROFESSIONAL ENGINEER
Digitally signed by Ben Iddins
Date: 2025.06.05 10:10:46

CALL 811
2 BUSINESS DAYS BEFORE YOU DIG
(UNDERGROUND UTILITY LOCATIONS ARE APPROX.)

6427 E MERCER WAY

6427 E MERCER WAY
MERCER ISLAND, WA 98040
PROJECT No. 2501.0550.00

PERMIT PLAN

DETAILS

DATE: 6/5/2025

PLAN NUMBER:

C10

SHEET 10 OF 11

FILE LOCATION: Z:\SHARED\PROJECTS\ACTIVE\2025\01\2501.0550_CITIZEN DESIGN_6427 E MERCER WAY MERCER ISLAND\DRAWINGS\CAD\REVIT\ACTIVEFILE\6427 E MERCER WAY_MERCER ISLAND.DWG - ORIGINAL SHEET SIZE: ARCH FULL BLEED D (36.00 X 24.00 INCHES) - LAST MODIFIED BY: ZOE POPOVICH
PRINCIPAL: BI PROJECT MANAGER: JR DESIGNED BY: ZP DRAWN BY: GS CK CHECKED BY: BI

ATTACHMENT 1
CITY OF MERCER ISLAND
ON-SITE DETENTION SYSTEM WORKSHEET
(FOR NEW PLUS REPLACED IMPERVIOUS AREA OF 9,500 SF OR LESS)

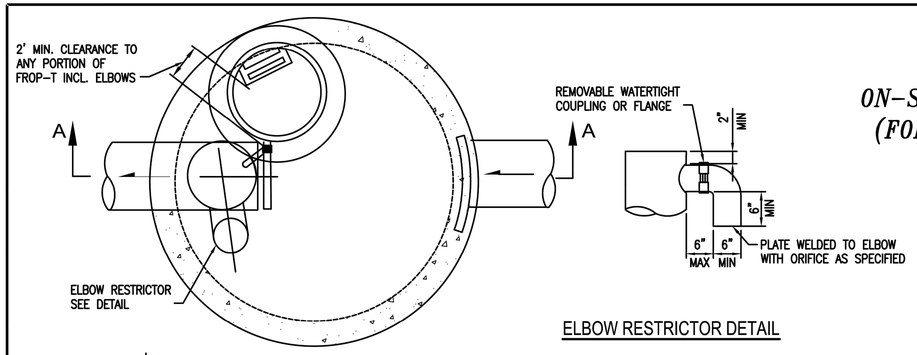

PLAN VIEW

ELBOW RESTRICTOR DETAIL

OWNER: TBD	ADDRESS: 6427 E MERCER WAY	PREPARED BY: BEN IDDINS, P.E.	
PERMIT #: TBD	MERCER ISLAND, WA 98040	PHONE: 206-523-0024	
		DATE: 03/26/2025	
NEW PLUS REPLACED IMPERVIOUS SURFACE AREA (SF): 7,893	DETENTION PIPE DIA (INCH): 60	DETENTION PIPE LENGTH (FT): 49	ORIFICE #1 DIA 0.5 INCH, ELEV 141.50
SOIL TYPE: C	PIPE MATERIAL: TBD		ORIFICE #2 DIA 1.6 INCH, ELEV 147.10

* DETENTION PIPE SYSTEM INCLUDES TWO (2) 24.5' LONG PARALLEL PIPES AS SHOWN IN PLAN VIEW ON SHEET C06, FOR A TOTAL PIPE LENGTH OF 49'.

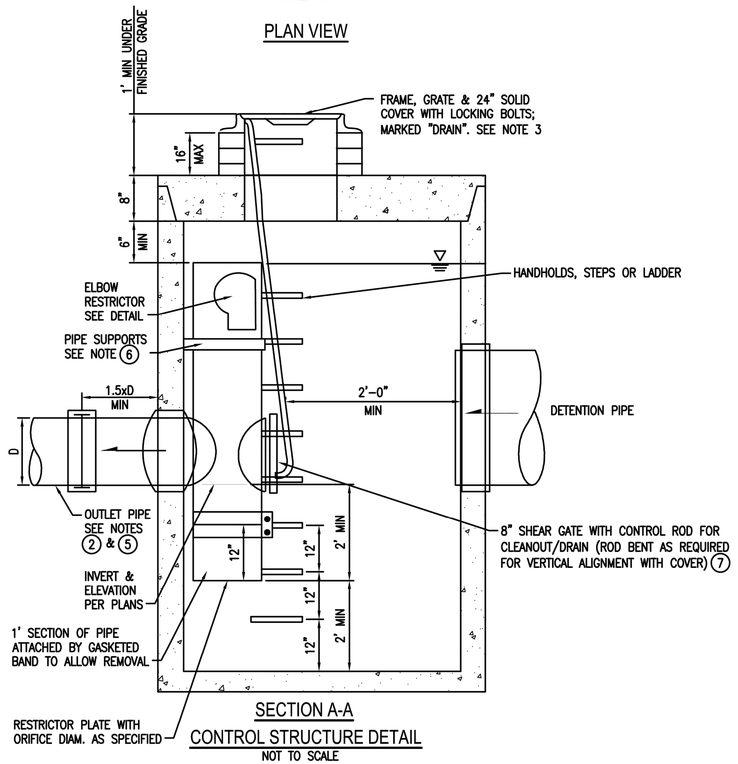

SECTION A-A

CONTROL STRUCTURE DETAIL
NOT TO SCALE

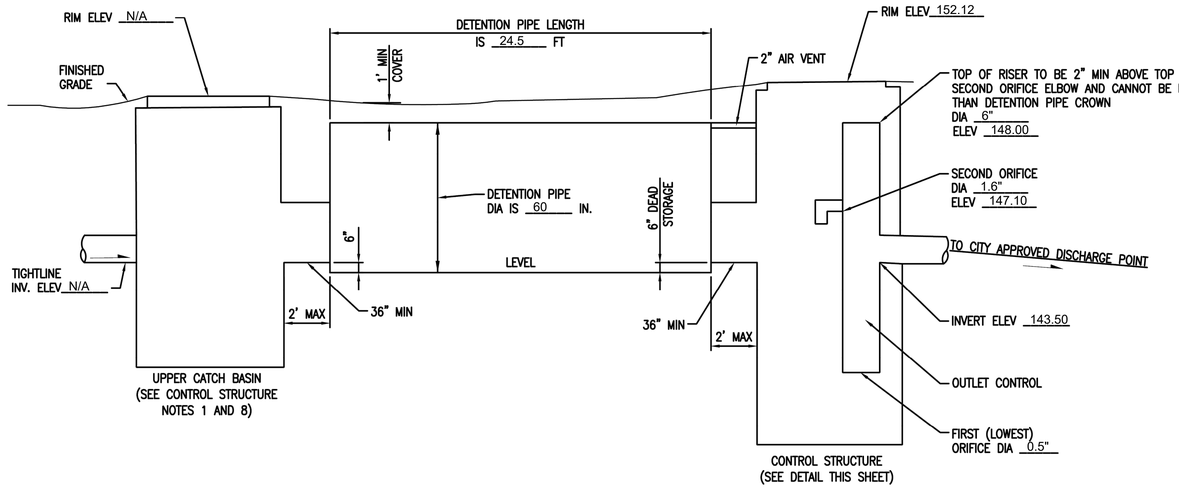

ON-SITE DETENTION SYSTEM
NOT TO SCALE (ENGINEER TO FILL IN BLANKS)

CONTROL STRUCTURE NOTES:

1. USE A MINIMUM OF A 54 IN. DIAM. TYPE 2 CATCH BASIN. THE ACTUAL SIZE IS DEPENDENT ON CONNECTING PIPE MATERIAL AND DIAMETER.
2. OUTLET PIPE: MIN. 6 INCH.
3. METAL PARTS: CORROSION RESISTANT. NON-GALVANIZED PARTS PREFERRED. GALVANIZED PIPE PARTS TO HAVE ASPHALT TREATMENT 1.
4. FRAME AND LADDER OR STEPS OFFSET SO:
   A. CLEANOUT GATE IS VISIBLE FROM TOP;
   B. CLIMB-DOWN SPACE IS CLEAR OF RISER AND CLEANOUT GATE;
   C. FRAME IS CLEAR OF CURB.
5. IF METAL OUTLET PIPE CONNECTS TO CEMENT CONCRETE PIPE, OUTLET PIPE TO HAVE SMOOTH O.D. EQUAL TO CONCRETE PIPE I.D. LESS 1/4 IN.
6. PROVIDE AT LEAST ONE 3 X 0.090 GAUGE SUPPORT BRACKET ANCHORED TO CONCRETE WALL WITH 5/8 IN. STAINLESS STEEL EXPANSION BOLTS OR EMBEDDED SUPPORTS 2 IN. INTO CATCH BASIN WALL (MAXIMUM 3'-0" VERTICAL SPACING).
7. THE SHEAR GATE SHALL BE MADE OF ALUMINUM ALLOY IN ACCORDANCE WITH ASTM B 26M AND ASTM B 275, DESIGNATION ZG32A; OR CAST IRON IN ACCORDANCE WITH ASTM A 48, CLASS 30B.
   THE LIFT HANDLE SHALL BE MADE OF A SIMILAR METAL TO THE GATE (TO PREVENT GALVANIC CORROSION), IT MAY BE OF SOLID ROD OR HOLLOW TUBING, WITH ADJUSTABLE HOOK AS REQUIRED.
   A NEOPRENE RUBBER GASKET IS REQUIRED BETWEEN THE RISER MOUNTING FLANGE AND THE GATE FLANGE.
   INSTALL THE GATE SO THAT THE LEVEL-LINE MARK IS LEVEL WHEN THE GATE IS CLOSED.
   THE MATING SURFACES OF THE LID AND THE BODY SHALL BE MACHINED FOR PROPER FIT.
   ALL SHEAR GATE BOLTS SHALL BE STAINLESS STEEL.
8. THE UPPER CATCH BASIN IS REQUIRED IF THE LENGTH OF THE DETENTION PIPE IS GREATER THAN 50 FT.

ON-SITE DETENTION SYSTEM NOTES:

1. CALL DEVELOPMENT SERVICES (206-275-7605) 24 HOURS IN ADVANCE FOR A DETENTION SYSTEM INSPECTION BEFORE BACKFILLING AND FOR FINAL INSPECTIONS.
2. RESPONSIBILITY FOR OPERATION AND MAINTANANCE OF DRAINAGE SYSTEMS ON PRIVATE PROPERTY IS RESPONSIBILITY OF THE PROPERTY OWNER. MATERIAL ACCUMULATED IN THE STORAGE PIPE MUST BE REMOVED FROM CATCH BASINS TO ALLOW PROPER OPERATION. THE OUTLET CONTROL ORIFICE MUST BE KEPT OPEN AT ALL TIMES.
3. PIPE MATERIAL, JOINT, AND PROTECTIVE TREATMENT SHALL BE IN ACCORDANCE WITH SECTION 7.04 AND 9.05 OF THE WSDOT STANDARD SPECIFICATION FOR ROAD, BRIDGE, AND MUNICIPAL CONSTRUCTION, LATEST VERSION. SUCH MATERIALS INCLUDE THE FOLLOWING, LINED CORRUGATED POLYETHYLENE PIPE (LCPE), ALUMINIZED TYPE 2 CORRUGATED STEEL PIPE AND PIPE ARCH (MEETS AASHTO DESIGNATIONS M274 AND M36), CORRUGATED OR SPIRAL RIB ALUMINUM PIPE, OR REINFORCED CONCRETE PIPE. CORRUGATED STEEL PIPE IS NOT ALLOWED.
4. FOOTING DRAINS SHALL NOT BE CONNECTED TO THE DETENTION SYSTEM.

DETAILS

NO.	DATE	BY	REVISION

BASE MAP/TOPOGRAPHY PROVIDED BY OTHERS. FACET CANNOT BE HELD LIABLE FOR ACCURACY. CONTRACTOR SHALL FIELD VERIFY GRADES, UTILITIES, AND ALL OTHER EXISTING FEATURES AND CONDITIONS. IF CONDITIONS ARE NOT AS SHOWN AND/OR PLANS ARE INCORRECT, CONTACT ENGINEER AS SOON AS POSSIBLE. FACET PRIOR TO CONSTRUCTION.

FACET
P: 206.522.0024
www.facetnw.com
9706 4th Ave NE
Suite 300
Seattle, WA 98115
FEDERAL WAY | KIRKLAND | MOUNT VERNON | SEATTLE | SPOKANE | WHIDBEY ISLAND

BENJAMIN J. IDDINS — STATE OF WASHINGTON — 21611 — REGISTERED PROFESSIONAL ENGINEER
Digitally signed by Ben Iddins
Date: 2025.06.05 11:36:07 -07'00'

CALL 811
2 BUSINESS DAYS BEFORE YOU DIG
(UNDERGROUND UTILITY LOCATIONS ARE APPROX.)

6427 E MERCER WAY
6427 E MERCER WAY
MERCER ISLAND, WA 98040
PROJECT No. 2501.0550.00

PERMIT PLAN

DETAILS

DATE: 6/5/2025
PLAN NUMBER:
C11
SHEET 11 OF 11

FILE LOCATION: Z:\SHARED\PROJECTS\ACTIVE\2025\01\2501.0550, CITIZEN DESIGN, 6427 E MERCER WAY MERCER ISLAND\DRAWINGS\CAD-REVIT\ACTIVEFILES\6427 E MERCER WAY_MERCER ISLAND.DWG - ORIGINAL SHEET SIZE: ARCH FULL BLEED D (36.00 X 24.00 INCHES) - LAST MODIFIED BY: ZOE POPOVICH
PRINCIPAL: BI PROJECT MANAGER: JR DESIGNED BY: ZP DRAWN BY: GS, CK CHECKED BY: BI

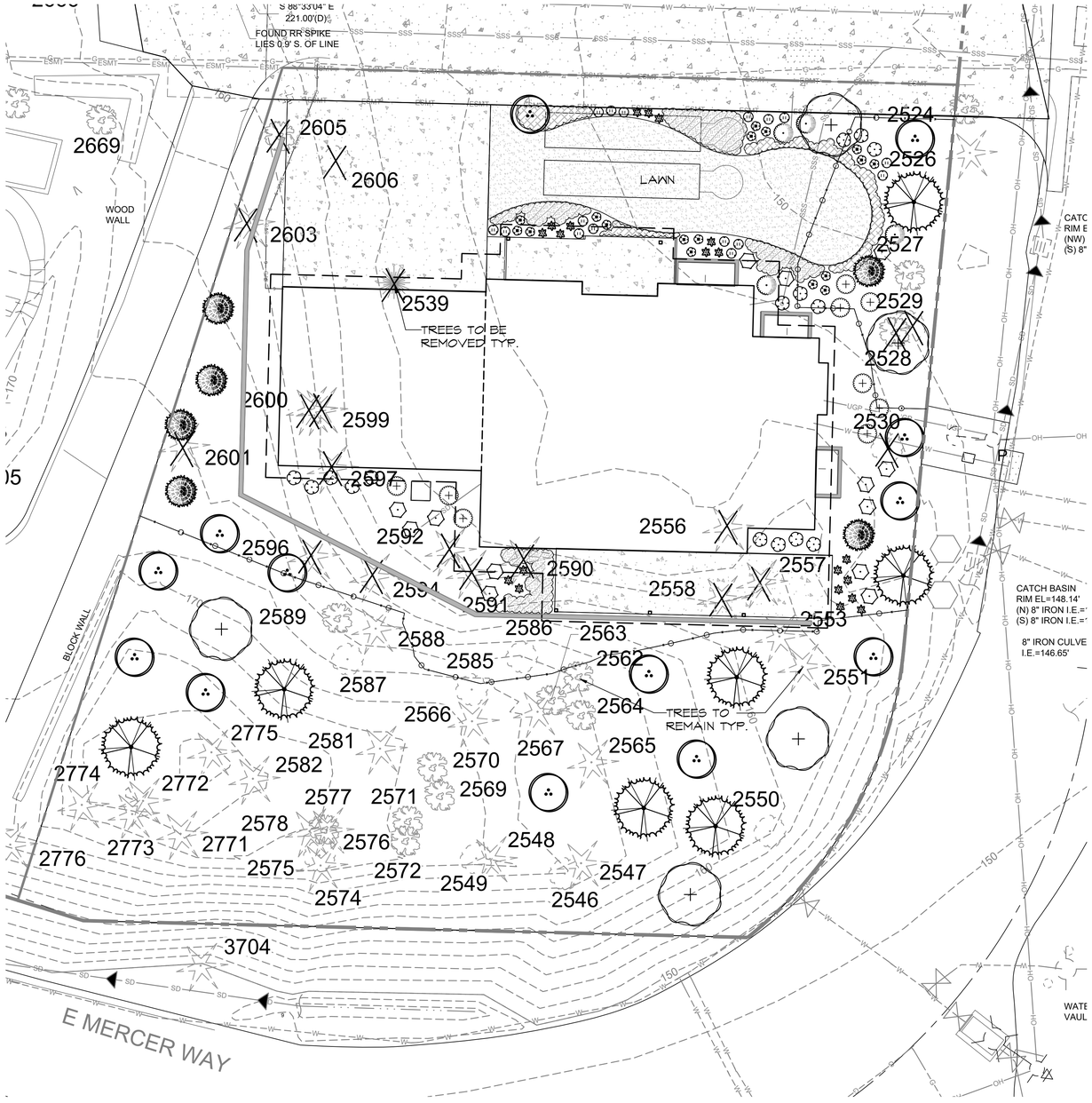

PLANT SCHEDULE

SYMBOL	BOTANICAL / COMMON NAME	SIZE	QTY
NATIVE TREES			
	Abies lasiocarpa / Alpine Fir	6' Ht. min.	6
	Acer circinatum / Vine Maple	1.5"Cal	13
	Rhamnus purshiana / Cascara	1.5"Cal	5
	Thuja plicata / Western Red Cedar	6' Ht. min.	7
SHRUBS			
	Choisya ternata 'Sundance' / Golden Mexican Mock Orange	5 gal	13
	Erica carnea 'Springwood White' / White Spring Heather	1 gal	16
	Hydrangea quercifolia / Oakleaf Hydrangea	5 gal	4
	Polystichum munitum / Western Sword Fern	1 gal	20
	Rhododendron var. / Rhododendron	5 gal	9
	Sarcococca ruscifolia / Fragrant Sarcococca	2 gal	15
ANNUALS/PERENNIALS			
	Astilbe x arendsii 'Beauty of Ernst' TM / Color Flash Astilbe	1 gal	17

SYMBOL	BOTANICAL / COMMON NAME	SIZE	SPACING	QTY
GROUND COVERS				
	Acorus gramineus 'Ogon' / Golden Variegated Sweetflag	1 gal	12" o.c.	207
	Liriope muscari / Lily Turf	1 gal	36" o.c.	14
SOD/SEED				
	LAWN with 4" topsoil	sod		877 sf

REPLACEMENT TREE NOTES:

-31 REPLACEMENT TREES NEEDED

-31 TREES PROVIDED

LANDSCAPE PLAN
SCALE: 1" = 10' - 0"

GRAPHIC SCALE
-10 0 5 10 20
(IN FEET)
1 inch = 10 feet

Drawn: NH
Checked: KA
Approved: NH

Created: 4/2/25
1. 4/25/25: revised
2. 6/11/25: revised

CRAMER DESIGN CONSULTANTS, INC.
LANDSCAPE ARCHITECT
1909 242ND STREET SE
BOTHELL, WA 98021
425-241-6258

STATE OF WASHINGTON
REGISTERED
LANDSCAPE ARCHITECT
KYLE L. CRAMER
CERTIFICATE NO. 634

MERCER ISLAND 6427
6427 E. MERCER WAY, MERCER ISLAND WA

SHEET
L-01
OF 1 SHEETS

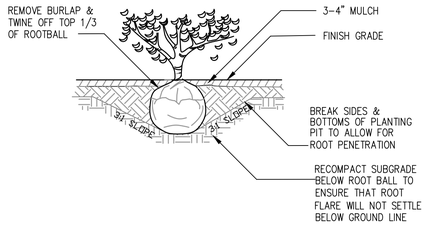

1 TYPICAL SHRUB PLANTING DETAIL

NTS

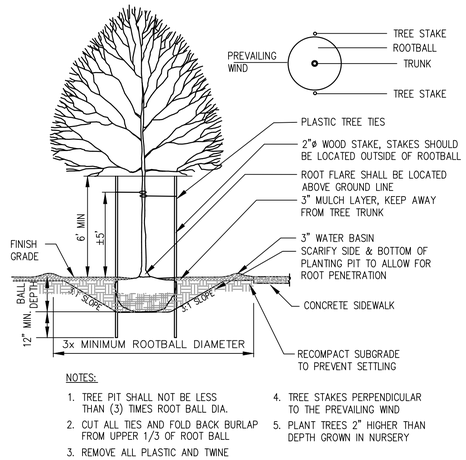

NOTES:

1. TREE PIT SHALL NOT BE LESS THAN (3) TIMES ROOT BALL DIA.
2. CUT ALL TIES AND FOLD BACK BURLAP FROM UPPER 1/3 OF ROOT BALL
3. REMOVE ALL PLASTIC AND TWINE
4. TREE STAKES PERPENDICULAR TO THE PREVAILING WIND
5. PLANT TREES 2" HIGHER THAN DEPTH GROWN IN NURSERY

2 TYPICAL DECIDUOUS TREE PLANTING DETAIL

NTS

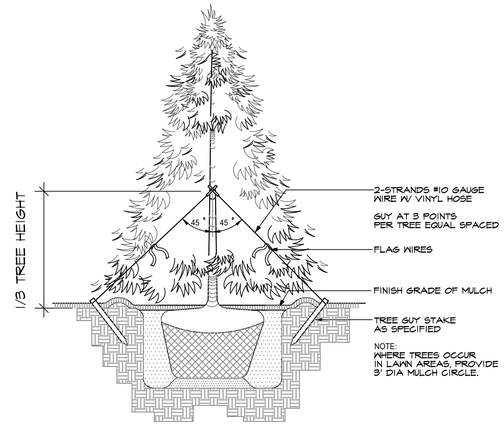

3 TYPICAL EVERGREEN TREE PLANTING DETAIL

NTS

NOTES

1. ALL SOIL AREAS DISTURBED OR COMPACTED DURING CONSTRUCTION, AND NOT COVERED BY BUILDINGS OR PAVEMENT, SHALL BE AMENDED WITH COMPOST AS DESCRIBED BELOW.
2. SUBSOIL SHOULD BE SCARIFIED (LOOSENED) 4 INCHES BELOW AMENDED LAYER TO PRODUCE 12 INCH DEPTH OF UN-COMPACTED SOIL, EXCEPT WHERE SCARIFICATION WOULD DAMAGE TREE ROOTS OR AS DETERMINED BY THE ENGINEER.
3. COMPOST SHALL BE TILLED IN TO 8 INCH DEPTH INTO EXISTING SOIL OR PLACE 8 INCHES OF COMPOST-AMENDED SOIL, PER SOIL SPECIFICATIONS.
4. TURF AREAS SHALL RECEIVE 1.75 INCHES OF COMPOST TILLED IN TO 8 INCH DEPTH, OR MAY SUBSTITUTE 8 INCHES OF IMPORTED SOIL CONTAINING 20-25% COMPOST BY VOLUME. PLANT GRASS SEED OR SOD PER SPECIFICATION.
5. PLANTING BEDS SHALL RECEIVE 3 INCHES OF COMPOST TILLED IN TO 8 INCH DEPTH, OR MAY SUBSTITUTE 8 INCH OF IMPORTED SOIL CONTAINING 35-40% COMPOST BY VOLUME. MULCH AFTER PLANTING, WITH 2-4 INCHES OF ARBORIST WOOD CHIP MULCH OR APPROVED EQUAL.
6. SETBACKS: TO PREVENT UNEVEN SETTLING, DO NOT COMPOST- AMEND SOIL WITHIN 3 FEET OF UTILITY INFRASTRUCTURES (POLES, VAULTS, METERS ETC.). WITHIN ONE FOOT OF PAVEMENT EDGE, CURBS AND SIDEWALKS. SOIL SHOULD BE COMPACTED TO APPROXIMATELY 90% PROCTOR TO ENSURE A FIRM SURFACE.

4 SOIL AMENDMENT AND DEPTH

NTS

960304-01

NOTES:

1. 3-INCH WOOD CHIP MULCH MAY BE ADDED FOR ROOT PROTECTION WITHIN FENCED AREA.
2. OUTSIDE OF PROTECTION FENCING AREA, PROTECT ROOTS 2-INCHES OR LARGER IN DIAMETER BY USING HAND EXCAVATION TECHNIQUES.
3. MINIMIZE CONSTRUCTION ZONE: PROTECT VEGETATION OUTSIDE CONSTRUCTION ZONE BY SEGREGATING IT WITH HIGH VISIBILITY CONSTRUCTION FENCING.

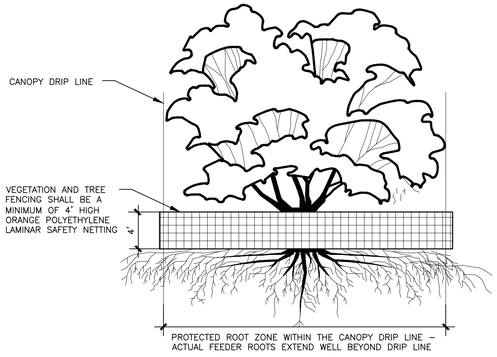

5 TREE PRESERVATION DETAIL

NTS

NOTES:

1. CONTRACTOR SHALL BE RESPONSIBLE FOR FAMILIARIZING THEMSELVES WITH ALL OTHER SITE IMPROVEMENTS AND CONDITIONS PRIOR TO STARTING LANDSCAPE WORK.

2. CONTRACTOR SHALL USE CAUTION WHILE EXCAVATING TO AVOID DISTURBING ANY UTILITIES ENCOUNTERED. CONTRACTOR IS TO PROMPTLY ADVISE OWNER OF ANY DISTURBED UTILITIES. LOCATION SERVICE HONE 1-800-424-5555.

3. CONTRACTOR SHALL MAINTAIN AND WATER ALL PLANT MATERIAL FOR 1 YEAR OR UNTIL FINAL INSPECTION AND ACCEPTANCE BY OWNER.

4. CONTRACTOR SHALL BE RESPONSIBLE FOR PROVIDING QUANTITIES OF PLANTS THAT ARE REPRESENTED BY SYMBOLS ON THE DRAWING.

5. SUBGRADE IS TO BE WITHIN $\frac{1}{10}$ INCH OF 1 FOOT AS PROVIDED BY OTHERS. ALL PLANTING AREAS TO BE CLEARED OF ALL CONSTRUCTION MATERIAL AND ROCKS & STICKS LARGER THAN 2 INCH DIAMETER.

6. 4 INCH DEPTH TOPSOIL IN LANDSCAPE AREA.

7. 2 INCH DEPTH, 3 FOOT DIAMETER BARK RING AROUND BASE OF STREET TREES AND OTHER TREES LOCATED IN LAWN.

8. TREES SHOULD BE PLANTED SO THAT THE CENTER OF EACH TRUNK IS 3 FEET FROM THE BACK OF CURB OR IF PLANTED BEHIND A SIDEWALK 3 FEET FROM THE BACK OF A SIDEWALK. WHERE TREES ARE TO BE PLANTED ADJACENT TO A SIDEWALK, A ROOT BARRIER SHALL BE INSTALLED ON THE SIDEWALK SIDE OF EACH TREE PARALLEL TO AND 6 INCHES FROM THE SIDEWALK. THE BARRIER SHALL BE 15 FEET LONG, CENTERED HORIZONTALLY ON THE TREE TRUNK AND EXTEND FROM THE GROUND SURFACE TO A DEPTH OF 18 INCHES.

9. GROUND COVERS SHALL BE PLANTED IN AN EQUILATERAL TRIANGULAR SPACING PATTERN AT THE ON-CENTER DISTANCES SHOWN ON THE PLAN OR IN THE PLANT SCHEDULE. WHERE GROUND COVER ABUTS CURBING, SIDEWALKS, SIGNS OR POLES, MINIMUM PLANTING DISTANCES SHALL BE 12" FROM CENTER OF PLANT TO CURB, SIDEWALK, ETC. MINIMUM PLANTING DISTANCE SHALL BE 24" FROM CENTER OF TREES AND SHRUBS.

10. ALL PLANT MATERIAL SHALL BE FERTILIZED WITH AGRO TRANSPLANT FERTILIZER 4-2-2 PER MANUFACTURERS SPECIFICATIONS.

11. ALL PLANT MATERIAL SHALL CONFORM TO AAN STANDARDS FOR NURSERY STOCK LATEST EDITION. ALL PLANT MATERIAL FURNISHED SHALL BE HEALTHY REPRESENTATIVES, TYPICAL OF THEIR SPECIES OF VARIETY AND SHALL HAVE A NORMAL GROWTH HABIT. THEY SHALL BE FULL, WELL BRANCHED, WELL PROPORTIONED, AND HAVE A VIGOROUS WELL DEVELOPED ROOT SYSTEM. ALL PLANTS SHALL BE HARDY UNDER CLIMATIC CONDITIONS SIMILAR TO THOSE IN THE LOCALITY OF THE PROJECT. TREES, SHRUBS AND GROUNDCOVER QUANTITIES, SPECIES, VARIETIES, SIZES AND CONDITIONS TO BE AS SHOWN ON THE PLANTING PLAN. PLANTS TO BE FREE OF DISEASE, INJURY, INSECTS, DECAY, HARMFUL DEFECTS AND ALL WEEDS. NO SUBSTITUTIONS SHALL BE MADE WITHOUT WRITTEN APPROVAL FROM LANDSCAPE ARCHITECT O OWNER.

12. NO PERMANENT IRRIGATION SYSTEM IS PROPOSED. TEMPORARY IRRIGATION SHALL BE REQUIRED FOR THE FIRST 3 YEARS OR UNTIL PROPOSED PLANT MATERIAL IS ESTABLISHED. PLANT MATERIAL SPECIFIED TO BE NATIVE OR DROUGHT TOLERANT AS DETERMINED BY LANDSCAPE ARCHITECT.

13. TREES TO BE PLANTED A MINIMUM 5 FEET FROM PROJECT BOUNDARIES.

14. THE AVERAGE SPACING FOR STREET REES SHOULBE BE 30 FEET ON CENTER AND ADJUSTED TO ALLOW FOR SIGHT LINES, UTILITES, TRAFFIC SIGNS, LIGHT STANDARDS, DRIVEWAYS AND OTHER STREET APPURTENANCES.

Drawn: NH
Checked: KCA
Approved: NH

Created: 4/2/25
1. 4/25/25 revised
2. 6/11/25 revised

CRAMER DESIGN CONSULTANTS, INC.
LANDSCAPE ARCHITECT
1909 242ND STREET SE
BOTHELL, WA 98021
425-241-6258

STATE OF WASHINGTON
REGISTERED
LANDSCAPE ARCHITECT
KYLE L. CRAMER
CERTIFICATE NO. 634

MERCER ISLAND 6427
6427 E. MERCER WAY, MERCER ISLAND WA

SHEET
L-02
OF 2 SHEETS