GENERAL NOTES

THESE DRAWINGS ARE THE PROPERTY OF THE ARCHITECT/DESIGNER AND MAY BE REPRODUCED ONLY WITH THE WRITTEN PERMISSION OF THE ARCHITECT/DESIGNER. AUTHORIZED REPRODUCTIONS MUST BEAR THE NAME OF THE ARCHITECT/DESIGNER, COPYRIGHT 2018 BY DME CONSTRUCTION. THESE DRAWINGS ARE FULLY PROTECTED BY FEDERAL AND STATE COPYRIGHT LAWS. ANY INFRINGEMENT WILL BE VIGOROUSLY PROSECUTED.

THIS PROJECT SHALL COMPLY WITH THE FOLLOWING CODES:
* 2018 INTERNATIONAL RESIDENTIAL CODE
* 2018 WASHINGTON STATE ENERGY CODE
* 2018 INTERNATIONAL MECHANICAL CODE
* 2018 INTERNATIONAL PLUMBING CODE
* 2018 INTERNATIONAL FIRE CODE

CONTRACTORS RESPONSIBILITY

CONTRACTOR TO VERIFY ALL DIMENSIONS AND STRUCTURAL MEMBER SIZES PRIOR TO CONSTRUCTION.

CONTRACTOR TO INFORM ARCHITECT/DESIGNER OF ANY DISCREPANCIES IN THE DRAWINGS OR FROM THE CODES.

CONTRACTOR INITIATED CHANGES SHALL BE SUBMITTED IN WRITING TO THE ARCHITECT/DESIGNER AND STRUCTURAL ENGINEER FOR APPROVAL PRIOR TO FABRICATION OR CONSTRUCTION. CHANGES SHOWN ON THE DRAWINGS ONLY WILL NOT SATISFY THE REQUIREMENT.

CONTRACTOR SHALL BE RESPONSIBLE FOR ALL REQUIRED, ALL SAFETY PRECAUTIONS AND THE METHODS, TECHNICAL, SEQUENCES OR PROCEDURES REQUIRED TO PERFORM THIS WORK.

ALL STRUCTURAL SYSTEMS SUCH AS WOOD TRUSSES WHICH ARE TO BE COMPOSED OF COMPONENTS TO BE FIELD ERECTED SHALL BE SUPERVISED BY THE SUPPLIER DURING MANUFACTURING, DELIVERY, HANDLING, STORAGE AND ERECTION IN ACCORDANCE WITH THE INSTRUCTIONS PREPARED BY THE SUPPLIER.

THE CONTRACTOR IS RESPONSIBLE FOR NOTIFYING THE ARCHITECT/DESIGNER IF UNUSUAL, UNFORESEEABLE, OR UNEXPECTED SUBSURFACE CONDITIONS ARE ENCOUNTERED.

DRAWINGS

GENERAL CONTRACTOR SHALL CHECK AND VERIFY ALL DIMENSIONS BEFORE PROCEEDING WITH WORK. DO NOT SCALE DRAWINGS.

NOTIFY ARCHITECT CONCERNING QUESTIONS, CHANGES, CONFLICTS OR OMMISIONS. IN THE EVENT OF CONFLICTS OR CHANGES BETWEEN DETAILS OR BETWEEN THE PLANS AND SPECIFICATIONS; NOTIFY ARCHITECT IMMEDIATELY. OBTAIN CLARIFICATION BEFORE PROCEEDING.

FACE OF FRAMING IS TO BE FLUSH WITH FACE OF CONCRETE, UNLESS OTHERWISE INDICATED.

THE TYPICAL EXTERIOR DIMENSIONS ARE TO FACE OF CONCRETE AND/OR FACE OF FRAMING. INTERIOR DIMENSIONS ARE TO FACE OF FRAMING, UNLESS OTHERWISE INDICATED.

DRAWINGS INDICATE GENERAL AND TYPICAL DETAILS OF CONSTRUCTION. WHERE CONDITIONS
ARE NOT SPECIFICALLY INDICATED BUT ARE SIMILAR IN CHARACTER TO DETAILS SHOWN, SIMILAR DETAILS OF CONSTRUCTION SHALL BE USED, SUBJECT TO REVIEW AND APPROVAL BY THE ARCHITECT AND STRUCTURAL ENGINEER. REFER TO ARCHITECTURAL DRAWINGS FOR OPENINGS, ARCHITECTURAL REQUIREMENTS AND DIMENSIONS.

INFORMATION CONTAINED WITHIN THESE DRAWINGS WITH REGARD TO EXISTING CONDITIONS IS PROVIDED FOR THE CONVENIENCE OF THE GENERAL CONTRACTOR. ALL ATTEMPTS HAVE BEEN MADE TO ACCURATELY REPRESENT THE EXISTING BUILDING AND SURROUNDINGS VIA OWNER SUPPLIED AS-BUILTS AND FIELD VERIFICATION. THE GENERAL CONTRACTOR SHALL FIELD VERIFY ALL EXISTING CONDITIONS PRIOR TO BEGINNING WORK TO AVOID UNREASONABLE DELAYS TO THE SCHEDULE.

ALL DRAWINGS OF EXISTING CONDITIONS ARE FOR REFERENCE ONLY, ALL EXISTING CONDITIONS SHALL BE FIELD VERIFIED.

SITE

N/A

SOILS

CONTRACTOR TO VERIFY ALL DIMENSIONS AND STRUCTURAL MEMBER SIZES PRIOR TO CONSTRUCTION.

CONTRACTOR TO INFORM ARCHITECT/DESIGNER OF ANY DISCREPANCIES IN THE DRAWINGS OR FROM THE CODES.

CONTRACTOR INITIATED CHANGES SHALL BE SUBMITTED IN WRITING TO THE ARCHITECT/DESIGNER AND STRUCTURAL ENGINEER FOR APPROVAL PRIOR TO FABRICATION OR CONSTRUCTION. CHANGES SHOWN ON THE DRAWINGS ONLY WILL NOT SATISFY THE REQUIREMENT.

CONTRACTOR SHALL BE RESPONSIBLE FOR ALL REQUIRED, ALL SAFETY PRECAUTIONS AND THE METHODS, TECHNICAL, SEQUENCES OR PROCEDURES REQUIRED TO PERFORM THIS WORK.

ALL STRUCTURAL SYSTEMS SUCH AS WOOD TRUSSES WHICH ARE TO BE COMPOSED OF COMPONENTS TO BE FIELD ERECTED SHALL BE SUPERVISED BY THE SUPPLIER DURING MANUFACTURING, DELIVERY, HANDLING, STORAGE AND ERECTION IN ACCORDANCE WITH THE INSTRUCTIONS PREPARED BY THE SUPPLIER.

THE CONTRACTOR IS RESPONSIBLE FOR NOTIFYING THE ARCHITECT/DESIGNER IF UNUSUAL, UNFORESEEABLE, OR UNEXPECTED SUBSURFACE CONDITIONS ARE ENCOUNTERED.

PERVIOUS PAVERS

N/A

MATERIALS / ASSEMBLIES

CONTRACTOR SHALL BE RESPONSIBLE FOR PROVIDING ALL WORK AND MATERIALS IN ACCORDANCE WITH ALL APPLICABLE COUNTY, LOCAL BUILDING AND FIRE CODES
AS REQUIRED.

ALL WOOD AND SONITUBE FORMS USED FOR CONCRETE IN THE GROUND OR BETWEEN FOUNDATION SILLS & THE GROUND SHALL BE REMOVED.

ALL WOOD IN CONTACT WITH CONCRETE OR MASONRY SHALL BE PRESSURE TREATED WOOD OR ANY SPECIES OR FOUNDATION GRADE CEDAR OR REDWOOD. ALL MARKED BY AN APPROVED TESTING AGENCY.

PROVIDE 90# FELT BETWEEN POSTS & CONCRETE.

PROVIDE DRAFT STOPS, FIRE BLOCKING, AND FIRESTOPS AS REQUIRED BY CODE.

FLASHING AND COUNTER FLASHING TO BE MIN. 24 GAUGE OF CORROSION-RESISTANT METAL, AND SHALL BE INSTALLED IN COMPLIANCE WITH LOCAL BUILDING CODES AND MANUFACTURES RECOMMENDATIONS.

GENERAL CONTRACTOR SHALL PROVIDE BLOCKING FOR ALL WALL-MOUNTED HARDWARE, TOILET ACCESSORIES, TOWEL BARS, LIGHT FIXTURES, BUILT-INS, ETC.,, AS REQUIRED FOR SECURE AND PROPER INSTALLATION.

ALL INTERIOR WALLS & CEILINGS SHALL HAVE 5/8" TYPE 'C' GYP. BD. (FIRECODE C CORE).

PROVIDE AN APPLICATION OF JOHN MANVILLE IGNITION BARRIER COATING AS AN IGNITION BARRIER OVER OPEN AND CLOSED-CELL SPRAY FOAM INSULATION IN MAIN FLOOR CEILING AND FLOOR OVER OCCUPIED SPACE.

PROVIDE A UL RATED "CLASS A" FIRE RESISTANT ROOFING MEMBRANE WHERE APPLICABLE.

ALL EXTERIOR DECKS TO BE CONSTRUCTED WITH PRESSURE TREATED WOOD.

VAPOR BARRIER BELOW SLABS ON GRADE TO BE 6 MIL POLYETHYLENE, PER SPECIFICATIONS.

ALL COUNTERS TO BE 36" A.F.F. UNLESS OTHERWISE NOTED.

PROVIDE 1 HR. FIRE RATED ASSEMBLY BETWEEN GARAGE AND LIVING SPACE.

MINIMUM STAIRWAY REQUIREMENTS ARE AS FOLLOWS: 36" MIN. WIDTH, 6'-8" MIN. HEADROOM, 8" MAX. RISE AND 9" MIN. RUN FOR (4) OR MORE RISERS. PROVIDE A HANDRAIL 34"-38" A.F.F. HAND GRIP PORTION TO BE CONTINUOUS AND 1 1/4"-2" IN GROSS SECTION WITH BOTH ENDS RETURNED. THERE SHALL BE A SPACE OF NOT LESS THAN 1 1/2" BETWEEN THE WALL AND THE HANDRAIL. GUARD RAILS SHALL BE IN ACCORDANCE WITH 2018 IRC, SECTION R.312.

BATHTUB, SHOWER FLOORS AND WALLS ABOVE BATHTUBS WITH INSTALLED SHOWER HEADS AND SHOWER ENCLOSURES SHALL BE FINISHED WITH A NONABSORBENT SURFACE A MINIMUM OF 6' ABOVE THE FLOOR PER 2018 IRC, R.307.2.

WALLS

INSULATED WITH R-21 BATT (FOR 2x6 WALLS) AND R-21 SPRAY (FOR 2x4 WALLS), UNLESS NOTED OTHERWISE.

FLOORS

PROVIDE R-30 BATT INSULATION OVER UNHEATED SPACE, UNLESS NOTED OTHERWISE.

ROOFS AND CEILINGS

INSULATED WITH R-49 BATT, UNLESS NOTED OTHERWISE. PROVIDE INSULATION IN CEILING WHERE POSSIBLE AND IN RAFTERS IF VAULTED CEILING USE R-38 BATT, IF CONDITION EXISTS, MAINTAIN A MIN. OF 1" CLEAR BETWEEN TOP OF INSULATION AND BOTTOM OF SHEATHING FOR VENTING. VENTING MUST OCCUR IN EACH JOIST SPACE. WHERE CONTINUOUS VENTING WITHIN A JOIST SPACE IS INTERUPTED BY A HEADER (I.E. SKYLIGHT OR AT HIP END), PROVIDE (2) 1"x2" VENTING HOLES AT THE TOP OF THE RAFTER AT THE HEADER TO ALLOW FOR CONTINUAL THROUGH VENTING INTO THE ADJACENT JOIST SPACE.

SLAB ON GRADE

PROVE EXTRUDED RIGID CLOSE CELL INSULATION R-10. INSULATION TO PROVIDE THERMAL BREAK BETWEEN SLAB AND FOOTING AND RUN FROM TOP OF SLAB TO THE BOTTOM OF FOOTING. INSULATION MAY BE INTERRUPTED FOR 6" EVERY 2'-0" TO ALLOW FOR DOWELING TO TIE SLAB AND FOOTING TOGETHER.

VAPOR BARRIER

AN APPROVED 10 MIL. VAPOR BARRIER SHALL BE INSTALLED AT EXTERIOR WALLS AND AT ROOF DECKS, BELOW ENCLOSED JOIST SPACES WHERE CEILING FINISHES ARE DIRECTLY INSTALLED TO JOIST, AND ANY OTHER WALL OR CEILING SURFACES WHICH RECEIVE INSULATION. THIS VAPOR BARRIER MAY BE A COMPONENT OF THE INSULATION MATERIAL. APPLICATION AND INSTALATIONS OF THE INSULATION AND VAPOR BARRIERS SHALL COMPLY WITH STAT OF WASHINGTON THERMAL UNSULATION STANDARDS (WB %)

ENERGY

ALL MATERIALS, WORKMANSHIP AND CONSTRUCTION SHALL CONFORM TO THE REQUIREMENTS OF THE IRC 2018 AND THE WASHINGTON STATE ENERGY CODE, LATEST EDITION. VERIFY ALL CONDITIONS BEFORE PROCEEDING WITH WORK..

ALL WOOD AND SONITUBE FORMS USED FOR CONCRETE IN THE GROUND OR BETWEEN FOUNDATION SILLS & THE GROUND SHALL BE REMOVED.

ALL WOOD IN CONTACT WITH CONCRETE OR MASONRY SHALL BE PRESSURE TREATED WOOD OR ANY SPECIES OR FOUNDATION GRADE CEDAR OR REDWOOD. ALL MARKED BY AN APPROVED TESTING AGENCY.

PROVIDE 90# FELT BETWEEN POSTS & CONCRETE.

PROVIDE DRAFT STOPS, FIRE BLOCKING, AND FIRESTOPS AS REQUIRED BY CODE.

FLASHING AND COUNTER FLASHING TO BE MIN. 24 GAUGE OF CORROSION-RESISTANT METAL, AND SHALL BE INSTALLED IN COMPLIANCE WITH LOCAL BUILDING CODES AND MANUFACTURES RECOMMENDATIONS.

GENERAL CONTRACTOR SHALL PROVIDE BLOCKING FOR ALL WALL-MOUNTED HARDWARE, TOILET ACCESSORIES, TOWEL BARS, LIGHT FIXTURES, BUILT-INS, ETC.,, AS REQUIRED FOR SECURE AND PROPER INSTALLATION.

ALL INTERIOR WALLS & CEILINGS SHALL HAVE 1/2" GYP. BD.

APPLICATION INSTALLATIONS OF INSULATION AND VAPOR BARRIERS SHALL COMPLY WITH STATE OF WASHINGTON THERMAL INSULATION STANDARDS (WB 98).

PROVIDE A UL RATED "CLASS A" FIRE RESISTANT ROOFING MEMBRANE WHERE APPLICABLE.

FLOOR INSULATION SHALL BE INSTALLED TO MAINTAIN PERMANENT CONTACT WITH THE UNDERSIDE OF THE SUBFLOOR DECKING. INSULATION SUPPORTS SHALL BE INSTALLED SO SPACING IS NO MORE THAN 24" O.C. FOUNDATION VENTS SHALL BE PLACED SO THAT THE TOP OF THE VENT IS BELOW THE LOWER SURFACE OF THE FLOOR INSULATION PER 2018 IRC, R.402.2.7.

PROVIDE AN EAVE BAFFLE FOR AIR PERMEABLE INSULATION IN THE VENTED ATTIC MAINTAINING AN OPENING EQUAL OR GREATER THAN THE SIZE OF THE VENT EXTENDING OVER THE TOP OF THE INSULATION PER 2018 IRC, R.402.2.3.

PROVIDE AND SPECIFY HIGH-EFFICIENCY FIXTURES FOR ALL OUTDOOR LIGHTING ATTACHED TO THE BUILDING OR PROVIDE PHOTO DAYLIGHT CONTROL AND A MOTION SENSOR PER 2018 IRC.

PROVIDE AND SPECIFY THAT 75% OF PERMANENTLY INSTALLED LAMPS IN LIGHTING FIXTURES SHALL BE HIGH-EFFICIENCY LAMPS PER 2018 IRC, R.404.1.

SECTION R.406
ADDITIONAL ENERGY EFFICIENCY REQUIREMENTS
R.406.1 SCOPE. THIS SECTION ESTABLISHES OPTIONS FOR ADDITIONAL CRITERIA TO BE MET FOR ONE- AND TWO-FAMILY DWELLINGS AND TOWNHOUSES, AS DEFINED IN SECTION 101.2 OF THE INTERNATIONAL RESIDENTIAL CODE TO DEMONSTRATE COMPLIANCE WITH THIS CODE.
R.406.2 ADDITIONAL ENERGY EFFICIENCY REQUIREMENTS (MANDATORY). EACH DWELLING UNIT IN ONE- AND TWO-FAMILY DWELLINGS AND TOWNHOUSES, AS DEFINED IN SECTION 101.2 OF THE INTERNATIONAL RESIDENTIAL CODE SHALL COMPLY WITH SUFFICIENT OPTIONS FROM TABLE R.406.2 SO AS TO ACHIEVE THE FOLLOWING MINIMUM NUMBER OF CREDITS: 2018 WASHINGTON STATE ENERGY CODE R.E-33

1. SMALL DWELLING UNIT; ..... 3 POINTS DWELLING UNITS LESS THAN 1500 SQUARE FEET IN CONDITIONED FLOOR AREA WITH LESS THAN 300 SQUARE FEET OF FENESTRATION AREA, ADDITIONS TO EXISTING BUILDING THAT ARE LESS THAN 750 SQUARE FEET OF HEATED FLOOR AREA.
2. MEDIUM DWELLING UNIT; ..... 4 POINTS ALL DWELLING UNITS THAT ARE NOT INCLUDED IN #1 OR #3.
3. LARGE DWELLING UNIT; ..... 7 POINTS DWELLING UNITS EXCEEDING 5000 SQUARE FEET OF CONDITIONED FLOOR AREA.

THE DRAWINGS INCLUDED WITH THE BUILDING PERMIT APPLICATION SHALL IDENTIFY WHICH OPTIONS HAVE BEEN SELECTED AND THE POINT VALUE OF EACH OPTION, REGARDLESS OF WHETHER SEPARATE MECHANICAL, PLUMBING, ELECTRICAL, OR OTHER PERMITS ARE UTILIZED FOR THE PROJECT.

TABLE 406.2 - ENERGY CREDITS (DEBITS) OPTION DESCRIPTION CREDIT(S)

1a - EFFICIENT BUILDING ENVELOPE 1a:
PRESCRIPTIVE COMPLIANCE IS BASED ON TABLE R.402.1.1 WITH THE FOLLOWING MODIFICATIONS
FENESTRATION U = 0.28
FLOOR R-38
SLAB ON GRADE R-10 PERIMETER AND UNDER ENTIRE SLAB
BELOW GRADE SLAB R-10 PERIMETER AND UNDER ENTIRE SLAB
OR
COMPLIANCE BASED ON SECTION R.402.1.4: REDUCE THE TOTAL UA BY 5%. 0.5

1b - EFFICIENT BUILDING ENVELOPE 1b:
PRESCRIPTIVE COMPLIANCE IS BASED ON TABLE R.402.1.1 WITH THE FOLLOWING MODIFICATIONS
FENESTRATION U = 0.25
WALL R-21 PLUS R-4
FLOOR R-38
BASEMENT WALL R-21 INT PLUS R-5 CI SPRAY FOAM
SLAB ON GRADE R-10 PERIMETER AND UNDER ENTIRE SLAB
BELOW GRADE SLAB R-10 PERIMETER AND UNDER ENTIRE SLAB
OR
COMPLIANCE BASED ON SECTION R.402.1.4: REDUCE THE TOTAL UA BY 15%. 1.0

1e EFFICIENT BUILDING ENVELOPE 1e:
PRESCRIPTIVE COMPLIANCE IS BASED ON TABLE R.402.1.1 WITH THE FOLLOWING MODIFICATIONS: FENESTRATION U = 0.22
CEILING AND SINGLE-RAFTER OR JOIST-VAULTED R-49 ADVANCED
WOOD FRAME WALL R-21 INT PLUS R-12 CI
FLOOR R-38
BASEMENT WALL R-21 INT PLUS R-12 CI
SLAB ON GRADE R-10 PERIMETER AND UNDER ENTIRE SLAB
BELOW GRADE SLAB R-10 PERIMETER AND UNDER ENTIRE SLAB
OR
COMPLIANCE BASED ON SECTION R.402.1.4: REDUCE THE TOTAL UA BY 30%. 2.0

2i - AIR LEAKAGE CONTROL AND EFFICIENT VENTILATION 2e
COMPLIANCE BASED ON R.402.4.1.2: REDUCE THE TESTED AIR LEAKAGE TO 4.0 AIR CHANGES PER HOUR MAXIMUM
AND
ALL WHOLE HOUSE VENTILATION REQUIREMENTS AS DETERMINED BY SECTION M1507.3 OF THE INTERNATIONAL RESIDENTIAL CODE SHALL BE MET WITH A HIGH EFFICIENCY FAN (MAXIMUM 0.35 WATTS/CFM), NOT INTERLOCKED WITH THE FURNACE FAN. VENTILATION SYSTEMS USING A FURNACE INCLUDING AN ECM MOTOR ARE ALLOWED, PROVIDED THAT THEY ARE CONTROLLED TO OPERATE AT LOW SPEED IN VENTILATION ONLY MODE. TO QUALIFY TO CLAIM THIS CREDIT, THE BUILDING PERMIT DRAWINGS SHALL SPECIFY THE OPTION BEING SELECTED AND SHALL SPECIFY THE MAXIMUM TESTED BUILDING AIR LEAKAGE AND SHALL SHOW THE HEAT RECOVERY VENTILATION SYSTEM.

3a - HIGH EFFICIENCY HVAC EQUIPMENT 3a
GAS, PROPANE OR OIL-FIRED FURNACE WITH MINIMUM AFFUE OF 95% OR GAS, PROPANE OR OIL-FIRED BOILER WITH MINIMUM AFUE OF 92%.
TO QUALIFY TO CLAIM THIS CREDIT, THE BUILDING PERMIT DRAWINGS SHALL SPECIFY THE OPTION BEING SELECTED AND SHALL SPECIFY THE HEATING EQUIPMENT TYPE AND THE MINIMUM EQUIPMENT EFFICIENCY.

5b - EFFICIENT WATER HEATING 5b:
WATER HEATING SYSTEM SHALL INCLUDE ONE OF THE FOLLOWING: GAS, PROPANE OR OIL WATER HEATER WITH MINIMUM EF OF 0.82
OR
ELECTRIC HEAT PUMP WATER HEATER WITH A MINIMUM EF OF 2.0 AND MEETING THE STANDARDS OF NEEA'S NORTHERN CLIMATE SPECIFICATIONS FOR HEAT PUMP WATER HEATERS
OR
WATER HEATER HEATED BY GROUND SOURCE HEAT PUMP MEETING THE REQUIREMENTS OF OPTION 3c.
TO QUALIFY TO CLAIM THIS CREDIT, THE BUILDING PERMIT DRAWINGS SHALL SPECIFY THE OPTION BEING SELECTED AND SHALL SPECIFY THE WATER HEATER EQUIPMENT TYPE AND THE MINIMUM EQUIPMENT EFFICIENCY AND, FOR SOLAR WATER HEATING SYSTEMS, THE CALCULATION OF THE MINIMUM ENERGY SAVINGS.

WINDOWS / DOORS

IN EACH SLEEPING ROOM AN EGRESS WINDOW OR DOOR SHALL BE PROVIDED THAT HAS 5.7 SF. OF CLEAR NET OPERABLE AREA. THE SMALLEST CLEAR MIN. DIMENSION SHALL NOT BE LESS THAN 20" IN WIDTH OR 24" IN HEIGHT. WINDOW SILLS IN SLEEPING ROOMS NOT TO EXCEED 44" ABOVE FLOOR PER 2018 IRC, R.310 & 310.1.

ALL WINDOWS TO BE DOUBLE-GLAZED WITH A MINIMUM U-VALUE OF 0. 30 OR BETTER.

ALL GLAZING IN A DOOR OR WITHIN 12" OF DOOR, OR WITHIN 18" OF FLOOR OR WITHIN 60" OF TUB FLOOR, OR ANY OTHER HAZARDOUS AREA PER CODE, TO BE TEMPERED SAFETY GLASS.

20 MIN. SELF-CLOSING DOOR W/ WEATHER STRIPPING REQUIRED AT GARAGE ENTRANCE TO LIVING SPACE.

PROVIDE AT LEAST ONE EGRESS DOOR THAT IS SIDE HINGED WITH A MINIMUM CLEAR OPEN WIDTH OF 32" (36" WIDE DOOR) AND MINIMUM CLEAR HEIGHT OF NOT LESS THAN 78" PER 2018 IRC, R.311.2.

WINDOW SILLS - WHERE THE OPENING OF AN OPERABLE WINDOW IS LOCATED MORE THAN 72" ABOVE FINISHED GRADE OR SURFACE BELOW, THE SILL SHALL BE A MINIMUM OF 24" ABOVE THE FINISHED FLOOR OF THE ROOM IT IS IN. OPERABLE SECTIONS OF WINDOWS SHALL NOT PERMIT OPENINGS THAT ALLOW PASSAGE OF 4" DIAMETER SPHERE WHERE OPENINGS ARE WITHIN 24" OF THE FLOOR PER 2018 IRC, R.312.2.1.

SKYLIGHT GLAZING MATERIAL TO MEET ALL REQUIREMENTS PER 2018 IRC, R.308.6.2.

PROVIDE MINIMUM 4" CURB HEIGHT FOR SKYLIGHTS PER 2018 IRC, R.308.6.8.

GLAZING

TO BE IN COMPLIANCE WITH IRC 2018, SECTION R.308 AND WASHINGTON STATE SAFETY OR TEMPERED GLASS. EXCEPTIONS ARE AS OUTLINED IN IRC 2018, SECTION R.308.4. HAZARDOUS LOCATIONS ARE:

1. GLAZING IN ALL FIXED AND PREAMBLE PANELS OF SWINGING, SLIDING AND BIFOLD DOORS.
2. GLAZING IN ALL INDIVIDUAL FIXED OR OPERABLE PANEL ADJACENT TO A DOOR WHERE THE NEAREST VERTICAL EDGE IS WITHIN A 24" ARC OF THE DOOR IN A CLOSED POSITION AND WHOSE BOTTOM EDGE IS LESS THAN 60" ABOVE THE FLOOR OR WALKING SURFACE.
3. GLAZING IN AN INDIVIDUAL FIXED OR OPERABLE PANEL THAT MEETS ALL OF THE FOLLOWING CONDITIONS:
   3.1 THE EXPOSED AREA OF AN INDIVIDUAL PANE IS LARGER THAN 9 SF.
   3.2 THE BOTTOM EDGE OF THE GLAZING IS LESS THAN 18" ABOVE THE FLOOR.
   3.3 THE TOP EDGE OF THE GLAZING IS MORE THAN 36" ABOVE THE FLOOR.,
   3.4 ONE OR MORE WALKING SURFACES ARE WITHIN 36", MEASURED HORIZONTALLY AND IN A STRAIGHT LINE OF THE GLAZING.
4. ALL GLAZING IN RAILINGS REGARDLESS OF AREA OR HEIGHT ABOVE A WALKING SURFACE. INCLUDED ARE STRUCTURAL BALLUSTER PANELS AND NONSTRUCTURAL INFILL PANELS.
5. GLAZING IN ENCLOSURES FOR OR WALLS FACING HOT TUBS, WHIRLPOOLS, SAUNAS, STEAM ROOMS, BATHTUBS AND SHOWERS WHERE THE BOTTOM EXPOSED EDGE OF THE GLAZING IS LESS THAN 60" MEASURED VERTICALLY ABOVE ANY STANDING OR WALKING SURFACE.

ATTIC

APPLY ROOFING IN ACCORDANCE WITH IRC 2018, SECTION R.905. PROVIDE ATTIC VENTILATION AS INDICATED ON ROOF FRAMING PLANS/ROOF DETAILS.

ATTIC VENTILATION: THE TOTAL NET FREE VENTILATION AREA SHALL NOT BE LESS THAN 1/150 OF THE AREA OF THE SPACE VENTILATED EXCEPT THAT REDUCTION OF THE TOTAL AREA TO 1/300 IS PERMITTED PROVIDED THAT AT LEAST 50%, AND NOT MORE THAN 80% OF THE REQUIRED VENTILATING AREA IS PROVIDED BY VENTILATORS LOCATED IN THE UPPER PORTION OF THE SPACE TO BE VENTILATED AT LEAST 3 FEET ABOVE THE EAVE OR CORNICE VENTS. AS AN ALTERNATE, THE NET FREE CROSS VENTILATION AREA MAY BE REDUCED TO 1/300 WHEN A CLASS I OR II VAPOR BARRIER IS INSTALLED ON THE WARM-IN-WATER SIDE OF THE CEILING (IRC 2018, SECTION R.806.2)

ATTIC ACCESS OPENING MUST BE PROVIDED FOR ALL ATTIC AREAS THAT EXCEED 30 SF. AND HAVE A VERTICAL HEIGHT OF 30' OR GREATER. ROUGH FRAMED OPENING MIN. 22"x30". ACCESS TO BE UNOBSTRUCTED AND READILY ACCESSIBLE. WHEN LOCATED IN A CEILING, MIN. 30" UNOBSTRUCTED HEADROOM AT SOME POINT ABOVE THE ACCESS MEASURED VERTICALLY FROM THE BOTTOM OF CEILING FRAMING MEMBERS (IRC 2018, SECTION R.807.1)

PROVIDE 2" MIN. CONTINUOUS SCREEN VENT AT EACH END OF EACH RAFTER/ROOF TRUSS BAY.

VENTILATION

- PROVIDE PROPER ROOF & CRAWL SPACE VENTILATION PER 2018 IRC.
- VENT DRYER TO OUTSIDE PER MECHANICAL CODE.
- VENT ALL FANS TO OUTSIDE W/ 3' MIN. SEPARATION TO BUILDING OPENINGS.
- VENT HOT WATER TANK TO EXPANSION TANK.
- VENT DISHWASHER AT SINK.

EXHAUST MINIMUMS:
PROVIDE SOURCE SPECIFIC INTERMITTENT OPERATION EXHAUST FANS WITH THE FOLLOWING
MINIMUM STANDARDS:

BATHROOMS: 50 CFM
LAUNDRY ROOM: 190 CFM
KITCHEN HOODS & DOWNDRAFTS: 400 CFM

PROVIDE WHOLE HOUSE VENTILATION SYSTEM SO AS TO CONFORM WITH STATE VENTILATION AND INDOOR AIR CODE.
- CURRENT EDITION AND SHALL BE CAPABLE WITH THE FOLLOWING MINIMUM STANDARDS:
- BE SIZED ACCORDING TO TABLE 5-2 WSEC AT 0.25" W.G. & SOUND RATED AT 1.5 SONES MAX..
- BE CONTROLLED BY READILY ACCESSIBLE 24 HR TIMER CAPABLE OF CONTINUOUS OPERATION WITH MANUAL & AUTOMATIC CONTROL
- INSULATED DUCTS SIZED TO MIN. R-4 & TERMINATED OUTSIDE BUILDING.

ALL UNITS WILL BE SEALED COMBUSTION DIRECT VENTS. THEY WILL HAVE TWO PVC VENTS OFF EACH UNIT, ONE EXHAUST AND ONE COMBUSTION.

DRYERS ON BOTH FLOORS WILL GO DOWN THROUGH THE FLOOR IN JOIST BAY AND OUT TO RIM. THEY WILL HAVE ONE ELBOW AND BE 12' LONG.

CRAWL VENTILATION:
TOTAL CUBIC FEET DIVIDED BY 15.124 CFM CONTINUOUSLY RUNNING.
TWO FANTECH FG-8 IN-LINE FANS, ONE INTAKE AND ONE EXHAUST.

MECHANICAL & ELECTRICAL

ALL WASTE LINES TO BE INSULATED WITH ACOUSTIC INSULATION. CAST IRON PIPING AT KEY LOCATIONS PER PLAN.

ELECTRICAL WIRING SHALL CONFORM TO THE 2018 WASHINGTON STATE ELECTRICAL CODE.

INSTALL OUTLETS AND SWITCHES AT HEIGHTS AND LOCATIONS REQUIRED BY 2018 IRC AND THE 2018 WASHINGTON STATE ELECTRICAL CODE.

LIGHTING WATTAGE SHALL MEET THE 2018 WASHINGTON STATE ELECTRICAL CODE.

PROVIDE SMOKE DETECTORS TO MEET THE 2018 IRC AND 2018 INTERNATIONAL FIRE CODE. SMOKE DETECTORS SHALL BE HARD WIRED AND EQUIPPED WITH BATTERY BACK UP. SMOKE DETECTORS SHALL SOUND AN ALARM THAT IS AUDIBLE THROUGH OUT THE BUILDING. SMOKE DETECTORS SHALL BE PLACES AT LEAST ON PER LEVEL, ONE IN EACH SLEEPING ROOM, ONE IN HALLWAY GIVING ACCESS TO THE SLEEPING ROOMS.

PROVIDE CARBON MONOXIDE DETECTORS AT ALL LEVEL PER 2018 IRC.

INSTALL A MONITORED NFPA 72 LOW VOLTAGE FIRE ALARM SYSTEM WITH HEAT SENSOR IN THE GARAGE. MONITORING COMPANY TO BE LICENSED AND BONDED.

INSTALL AN EXTERIOR SIREN CONNECTED INTO THE ALARM SYSTEM.

VERTICAL DISTANCE BETWEEN COOK TOP OF RANGE AND HOOD SHALL BE NO LESS THAN 30".

HOT WATER HEATER SHALL BE ANCHORED OR STRAPPED FOR EARTHQUAKE AND PLACED ON R-10 PAD IF LOCATED IN UNHEATED SPACE OR CONCRETE FLOOR.

PROVIDE COMBUSTION AIR FOR FURNACE PER CODE.

FURNACE AND WATER HEATER WITH IGNITION SOURCE SHALL BE ELEVATED SUCH THAT THE SOURCE OF IGNITION IS NOT LESS THAN 18" PER IRC, M1307.

MECHANICAL EQUIPMENT (PER DEFERRED SUBMITTAL):
NAVIEN TANKLESS WATER HEATER - MODEL# NPE-240A
AMERICAN STANDARD TWO STAGE FURNACE - MODEL # 896VA060
AMERICAN STANDARD 13 SEER AC UNIT - MODEL # RA1336

ELEVATOR (PER DEFERRED SUBMITTAL):

ELEVATOR TO BE INSTALLED PER CURRENT 2018 WASHINGTON ADMINISTRATIVE CODE (WAC) REQUIREMENTS. SEE SHOP DRAWINGS.

ELEVATOR SHALL COMPLY WITH ASME A17.1 AND B.321.

A SEPARATE PERMIT IS REQUIRED FOR ELEVATOR.

DEFERRED SUBMITTALS:

FOUNDATION & SHORING WATERPROOFING PRODUCTS & METHODS. GAS FIREPLACES, MECHANICAL EQUIPMENT, FIRE SPRINKLERS, APPLIANCES & VENTING, EXTERIOR RAILING, WATERPROOF DECK / BISON PAVER SYSTEM & WATERPROOF MEMBRANE & FLASHING.

ENERGY DATA

ALL NEW GLAZING, DOOR U-VALUES AND INSULATION R-VALUES TO SATISFY PRESCRIPTIVE PATH OF THE 2018 WASHINGTON STATE ENERGY CODE.

CONDITIONED FLOOR AREA: 8,168 SQ. FT.

COMPONENT PERFORMANCE PER 2018 WSEC:

	TARGET VALUE	DESIGN VALUE
NEW VERTICAL GLAZING:	U= 0.28	U= 0.28
NEW DOOR GLAZING:	U= 0.28	U= 0.28
FLAT CEILINGS:	U= 0.026(R-38)	U= 0.0133(R-75)
NEW WALLS ABOVE GRADE		
NEW 2x6 WALLS	R-21	R-21
SLAB ON GRADE:	R-10	R-10

DUCT LEAKAGE TEST RESULTS SHALL BE PROVIDED TO THE BUILDING INSPECTOR PRIOR TO AN APPROVED FINAL INSPECTION IF REQUESTED.

A RESIDENTIAL ENERGY COMPLIANCE CERTIFICATE COMPLYING WITH SEC 105.4 IS REQUIRED TO BE COMPLETED AND PERMANENTLY POSTED WITHIN 3' OF THE ELECTRICAL PANEL PRIOR TO FINAL INSPECTION, IF REQUIRED.

ALL NEW EXTERIOR WALL GLAZING SHALL BE DOUBLE GLAZED AND COMPLY WITH STATE OF WASHINGTON ENERGY CODE.

75% OF ALL LIGHT FIXTURES SHALL BE LED RECESSED
(HIGH EFFICIENCY), ALL CAN LIGHTS MUST MEET R.402.4.4.

PROJECT TEAM

OWNER
KOSS MURRAY
7675 NE 14TH ST MEDINA, WA 98039

ARCHITECT
RICHARD FLAKE / RF ARCHITECTURE
7421 214TH AVE E
BONNEY LAKE, WA 98391
PHONE: 253-359-4039
RICHARD@RFARCHITECTURE.COM

CONTRACTOR
SAAD CUSTOM HOMES LLC
JASON WILLIAMS
1215 120TH AVE NE #202
BELLEVUE, WA 98005
JASONW@SAADCUSTOMHOMES.COM

STRUCTURAL ENGINEER
R&T DESIGN & ENGINEERING
PO BOX 595
ISSAQUAH, WA 98027
PHONE: (425) 557-0779
TERRY@RNTENG

GEOTECH
GEOTECH CONSULTANTS INC.
MARC MCGINNIS
2401 10TH AVE. E
SEATTLE, WA 98102
PHONE: 425-260-1116
MARCM@GEOTECHNW.COM

CIVIL ENGINEER
APEX ENGINEERING
2601 SOUTH 35TH ST., #200
TACOMA, WA 98409
PHONE: 253-473-4494
FELIX@APEXENGINEERING.NET

ELEVATOR
CHINOOK ELEVATOR
824 3RD AVE S
KENT, WA 98032
PHONE: 425-213-0784
CHADBLACK@CHINOOKELEVATOR.COM

SURVEYOR
TERRANE
10801 MAIN ST., STE 102
BELLEVUE, WA 98004
PHONE: 425-458-4488

ARBORI

Window, Skylight and Door Schedule

Project Information	Contact Information
Murray Residence - Residence	Richard Flake
4803 forrest ave se	richard@rfarchitecture.com
Mercer Island, WA 98040	(253) 359-4039

	Ref.	U-factor	Width Qt.	Width Feet	Width Inch	Height Feet	Height Inch	Area	UA
Exempt Swinging Door (24 sq. ft. max.)								0.0	0.00
Exempt Glazed Fenestration (15 sq. ft. max.)								0.0	0.00
Vertical Fenestration (Windows and doors)									
Description									
2620		0.28	1	2	0	2	0	5.0	1.40
2620		0.28	1	2	6	2	6	5.0	1.40
5038		0.28	1	5	0	3	6	18.3	5.13
30110		0.28	1	3	0	11	0	33.0	9.24
18056		0.28	1	18	5	5	0	99.0	27.72
8050		0.28	1	8	5	5	0	40.0	11.20
5050		0.28	1	5	0	5	0	25.0	7.00
3056		0.28	1	3	0	5	6	16.5	4.62
3056		0.28	1	3	0	5	6	16.5	4.62
2620		0.28	1	2	0	2	6	5.0	1.40
2648		0.28	1	2	0	4	6	11.7	3.27
12040		0.28	1	12	0	4	0	48.0	13.44
5048		0.28	1	5	0	4	6	23.3	6.53
7090		0.28	1	7	0	9	0	63.0	17.64
2430		0.28	1	2	0	3	6	7.0	1.96
2038		0.28	1	2	0	3	0	7.3	2.05
2038		0.28	1	2	0	3	0	7.3	2.05
5056		0.28	1	5	0	5	6	27.5	7.70
3050		0.28	1	3	0	5	0	15.0	4.20
3050		0.28	1	3	0	5	0	15.0	4.20
8050		0.28	1	8	0	5	0	40.0	11.20
69120		0.28	1	6	0	12	0	81.0	22.68
4680		0.28	1	4	0	8	0	36.0	10.08
2630		0.28	1	2	0	3	0	7.5	2.10
5048		0.28	1	5	0	4	6	23.3	6.53
10060		0.28	1	10	0	6	0	60.0	16.80
4026		0.28	1	4	0	2	6	10.0	2.80
2026		0.28	1	2	0	2	6	5.0	1.40
10050		0.28	1	10	0	5	0	50.0	14.00
2640		0.28	1	2	0	4	0	10.0	2.80
15026		0.28	1	15	0	2	6	37.5	10.50
								0.0	0.00
3080		0.28	1	3	0	8	0	24.0	6.72
12680		0.28	1	12	0	8	0	100.0	28.00
15080		0.28	1	15	0	8	0	120.0	33.60
3880		0.28	1	3	0	8	0	29.3	8.21
15080		0.28	1	15	0	8	0	120.0	33.60
7680		0.28	1	7	0	8	0	60.0	16.80
								0.0	0.00
								0.0	0.00
								0.0	0.00
								0.0	0.00
								0.0	0.00
Sum of Vertical Fenestration Area and UA								1302.2	364.61
Vertical Fenestration Area Weighted U = UA/Area									0.28
Overhead Glazing (Skylights)									
Description									
								0.0	0.00
								0.0	0.00
								0.0	0.00
								0.0	0.00
								0.0	0.00
Sum of Overhead Glazing Area and UA								0.0	0.00
Overhead Glazing Area Weighted U = UA/Area									0.00
***Total Sum of Fenestration Area and UA** (for heating system sizing calculations)*								1302.2	364.61

Simple Heating System Size: Washington State

This heating system sizing calculator is based on the Prescriptive Requirements of the 2018 Washington State Energy Code (WSEC) and ACCA Manuals J and S. This tool will calculate heating loads only. ACCA procedures for sizing cooling systems should be used to determine cooling loads.

Please complete the green drop-downs and boxes that are applicable to your project. As you make selections in the drop-downs for each section, some values will be calculated for you. If you do not see the selection you need in the drop-down options, please contact the WSU Energy Program at energycodes@energy.wsu.edu or (360) 956-2042 for assistance.

Project Information	Contact Information
Murray Residence - Residence	Richard Flake
4803 forrest ave se	richard@rfarchitecture.com
Mercer Island, WA 98040	(253) 359-4039

Heating System Type: ○ All Other Systems ● Heat Pump

To see detailed instructions for each section, place your cursor on the word "Instructions"

Design Temperature (Instructions) — Bellevue

Design Temperature Difference (ΔT) 46
ΔT = Indoor (70 degrees) - Outdoor Design Temp

Area of Building

Conditioned Floor Area (Instructions) — Conditioned Floor Area (sq ft): 6,168

Average Ceiling Height (Instructions) — Average Ceiling Height (ft): 9.3 — Conditioned Volume: 75,551

Glazing and Doors (Instructions) — U-0.28

	U-Factor	X	Area	=	UA
	0.280		1,470		411.54

Skylights (Instructions)

	U-Factor	X	Area	=	UA
	0.50		0		---

Insulation

Attic (Instructions) — R-49

	U-Factor	X	Area	UA
	0.026		2229.7	

Single Rafter or Joist Vaulted Ceilings (Instructions) — Select R-Value

	U-Factor	X	Area	UA
	No selection		0	---

Above Grade Walls *(see Figure 1)* (Instructions) — R-21 Intermediate

	U-Factor	X	Area	UA
	0.056		6,466	362.08

Floors (Instructions) — Select R-Value

	U-Factor	X	Area	UA
	No selection		7,364	

Below Grade Walls *(see Figure 1)* (Instructions) — R-21 Interior

	U-Factor	X	Area	UA
	0.042			

Slab Below Grade *(see Figure 1)* (Instructions) — No Slab Below Grade in this project.

	F-Factor	X	Length	UA
	0.303		390	118.17

Slab on Grade *(see Figure 1)* (Instructions) — R-10 Fully Insulated

	F-Factor	X	Length	UA
	0.360		2,395	862.20

Location of Ducts (Instructions) — No Ducts

Duct Leakage Coefficient 1.00

Figure 1



Sum of UA	1754.00
Envelope Heat Load	80,684 Btu / Hour
Sum of UA x ΔT	
Air Leakage Heat Load	37,534 Btu / Hour
Volume x 0.6 x ΔT x 0.018	
Building Design Heat Load	118,218 Btu / Hour
Air leakage + envelope heat loss	
Building and Duct Heat Load	118,218 Btu / Hour
Ducts in unconditioned space: sum of building heat loss x 1.10	
Ducts in conditioned space: sum of building heat loss x 1	
Maximum Heat Equipment Output	147,772 Btu / Hour
Building and duct heat loss x 1.40 for forced air furnace	
Building and duct heat loss x 1.25 for heat pump	

(8/09)(1/0)

2018 Residential Ventilation Compliance Summary

Applicant:_____Parcel:_____Permit Number:_____

A whole-house ventilation system is required by the building code (2018 IRC Section M1505.4) to promote healthy indoor air quality in homes and provide increased comfort for occupants. **This is required for new dwelling units, and additions to existing dwelling units over 500 square feet.**

WHOLE HOUSE VENTILATION SYSTEM TYPE (see descriptions next page)

Note: If the project has selected an Air Leakage Control and Efficient Ventilation Option from WSEC Table R406.3, the ventilation system type chosen must be consistent with that option's requirements.

- ☐ Exempt: addition less than 500 sq.ft. or remodel only
- ☐ Exhaust fan(s) only (IRC M1505.4.1.2)
- ☐ Supply fan(s) only (IRC M1505.4.1.3)
- ☐ Balanced system (IRC M1505.4.1.4) including HRVs
- ☐ Furnace Integrated Supply (IRC M1505.4.1.5)

System will be distributed: ☐ Yes ☐ No (see definition next page)

Floor plans should indicate the location, type, and airflow rate of whole-house ventilation system.

WHOLE HOUSE VENTILATION SYSTEM AIRFLOW RATE

Step 1: Find airflow rate minimum from Table 1, circle applicable airflow.
Step 2: Multiple airflow rate by applicable multiplier from Table 2, type adjusted airflow in table.
Step 3: Multiply airflow rate by applicable multiplier from Table 3, type adjusted airflow in table.

Table 1. WHOLE-HOUSE SYSTEM MINIMUM VENTILATION RATES (circle)

Conditioned Floor Area of the Home in square feet	Number of Bedrooms in the Home				
	Studio & 1 bedroom	2 bedrooms	3 bedrooms	4 bedrooms	5 or more bedrooms
	Airflow in cubic feet per minute (CFM)				
< 500	30	30	35	45	50
501 - 1,000	30	35	40	50	55
1,001 - 1,500	30	40	45	55	60
1,501 - 2,000	35	45	50	60	65
2,001 - 2,500	40	50	55	65	70
2,501 - 3,000	45	55	60	70	75
3,001 - 3,500	50	60	65	75	80
3,501 - 4,000	55	65	70	80	85
4,001 - 4,500	60	70	75	85	90
4,501 - 5,000	65	75	80	90	95
> 5,001	(0.01 x Conditioned Floor Area of the Home in square feet) + (7.5 x (Number of Bedrooms in the Home + 1))				

Table 2. WHOLE-HOUSE VENTILATION QUALITY ADJUSTMENT (circle, type adjusted rate)

SYSTEM TYPE	DISTRIBUTED	NOT DISTRIBUTED	Min. adjusted fan size (CFM)
BALANCED	1.0	1.25	
NOT BALANCED	1.25	1.5	

Table 3. INTERMITTENT WHOLE-HOUSE VENTILATION RATE FACTORS (circle, type adjusted rate)

Run-time % in each 4-hour segment	Multiplier	Min. adjusted fan size (CFM)
50% (2 hrs every 4 hrs; 12 hrs /day)	2	
66% (2 hrs 40 min every 4 hrs; 16 hrs /day)	1.5	
75% (3 hrs every 4 hrs; 18 hrs /day)	1.3	
100% (continuously operating)	1.0	

WHOLE HOUSE VENTILATION SYSTEM SUMMARY

Specify: Location of ventilation equipment: _____Airflow rate (CFM):_____Specify run-time:_____

WHOLE HOUSE VENTILATION SYSTEM TYPES

Balanced whole house ventilation is any combination of concurrently operating mechanical exhaust and mechanical supply whereby the total mechanical exhaust airflow rate is within10% or 5 cfm of the total mechanical supply airflow rate, whichever is greater.

Distributed whole house ventilation is when outdoor air is supplied directly (not transfer air) to each habitable space and the exhausts air from all kitchen and bathrooms is vented directly to the outside.



Exhaust fan(s) only (IRC M1505.4.1.2)
This type of system has one or more exhaust fans, such as in bathrooms and laundry rooms, that creates a negative pressure which pulls in outdoor air through the dwelling unit to remove stale, moist air. In this type of system there is no dedicated supply air to replace the exhausted air, so fresh air is brought into the home passively through openings such as windows, window vents, through-wall vents, or leakage in the home's air barrier. With recent air barrier construction requirements and techniques improving, homes are becoming tighter and provide less opportunities for air leakage.

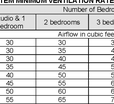

Supply fan(s) only (IRC M1505.4.1.3)
This type of system has one or more supply fans that are provided with controls to provide intermittent or continuous fresh air into the dwelling unit. In this type of system there is no interconnected exhaust fans, so the system works to pressurize the home, pushing stale moist air out of the building through openings such as windows, window vents, through-wall vents, or leakage in the home's air barrier. With recent air barrier construction requirements and techniques improving, homes are becoming tighter and provide less opportunities for air leakage.

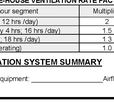

Balanced system (IRC M1505.4.1.4), **including HRVs**
This type of system has both supply and exhaust fans that are provided with controls to provide intermittent or continuous fresh air into the dwelling unit and exhaust from the dwelling unit to remove stale, moist air. When two fans and two duct systems are used, these must provide a balanced airflow rate to operate as designed. A balanced system can also include an energy (or heat) recovery ventilator (ERV/HRV), an appliance that provides both supply and exhaust air in one unit and captures the energy or heat from the exhaust air and transfers it to the supply air via a heat exchanger to minimize energy loss in the system.

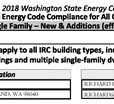

Furnace Integrated Supply (IRC M1505.4.1.5)
Previous editions of the codes allowed fresh air to be introduced to the home from an outside air duct connected directly to a home's furnace. This is no longer permitted in the code outright, as the system uses excess energy when the fans in the heating/cooling equipment are required to operate to distribute the air. This type of system may only be used if the heating system air handler fan(s) have multi-speed or variable speed flow capability.

AIR BARRIER AND INSULATION INSTALLATION TABLE R402.4.1.1

COMPONENT	AIR BARRIER CRITERIA	INSULATION CRITERIA
Air barrier and thermal barrier	A continuous air barrier shall be provided in the building envelope. Exterior thermal envelope contains a continuous air barrier. Breaks or joints in the air barrier shall be sealed.	Air permeable insulation shall not be used as a sealing material. Class I or II vapor retarders are required on the interior side of framed cavities.
Cavity insulation installation	All cavities in the thermal envelope shall be filled with insulation. The density of the insulation shall be at the manufacturers' product recommendations and said density shall be maintained for all volume of each cavity. Batt type insulation will show no voids or gaps and maintain an even density for the entire cavity. Batt insulation shall be installed in the recommended cavity depth. Batts shall be split to fill cavities that are not full depth. Batts shall be split to fill cavities that are not full depth. Batts shall be cut to fit the remaining depth of the cavity. Where the batt is cut around obstructions, loose fill insulation shall be placed to fill any surface or concealed voids, and at the manufacturers' specified density. Where faced batt is used, the installation tabs must be stapled to the face of the stud. There shall be no compression to the batt at the edges of the cavity due to over stapling. Installation tabs. Insulation that upon installation readily conforms to available space shall be installed filling the entire cavity and within the manufacturers' density recommendation.	
Ceiling/attic	The air barrier in any dropped ceiling/soffit shall be aligned with the insulation and any gaps in the air barrier sealed. Access openings, drop down stair or knee wall doors to unconditioned attic spaces shall be sealed.	Batt insulation installed in attic roof assemblies may be compressed at exterior wall lines to allow for required attic ventilation. The insulation in any dropped ceiling or soffit shall be aligned with the air barrier.
Walls	The junction of the foundation and sill plate shall be sealed. The junction of the top plate and the top of exterior walls shall be sealed. Knee walls shall be sealed.	Cavities within corners and headers shall be insulated by completely filling the cavity with a material having a minimum thermal resistance of R-3 per inch. Exterior thermal envelope insulation for framed walls shall be installed in substantial contact and continuous alignment with the air barrier.
Windows, skylights and	Space between window/door jambs and framing and skylights and framing shall be sealed.	
Rim joists	Rim joists shall include the air barrier.	Rim joists shall include the air barrier.
Floors (including above-garage and cantilevered)	The air barrier shall be installed at any exposed edge of insulation.	Installed to maintain permanent contact with underside of subfloor decking or permitted to be in contact with the topside of sheathing or continuous insulation installed on the underside of floor framing and extend from the bottom to the top of all perimeter floor
Crawl space walls	Soil in unvented crawl spaces shall be covered with Class I. black vapor retarder with joints taped.	Where provided in lieu of floor insulation, insulation shall be permanently attached to the crawlspace walls.
Shafts, penetrations	Duct shafts, utility penetrations, and flue shafts opening to exterior or unconditioned space shall be sealed.	
Narrow cavities		Batts in narrow cavities shall be cut to fit and installed to the correct density without any voids or gaps or compression. Narrow cavities shall be filled by insulation that on installation readily conforms to the available cavity space.
Garage separation	Air sealing shall be provided between the garage and conditioned spaces.	
Recessed lighting	Shall be sealed to the drywall.	Shall be air tight, and IC rated.
Plumbing and wiring		Batt insulation shall be cut neatly to fit around wiring and plumbing in exterior walls. There shall be no voids or gaps or compression where cut to fit. Insulation that readily conforms to available space shall extend behind piping and wiring.
Shower and/or tub	Installed at exterior walls adjacent to showers and tubs shall separate them from showers and tubs.	Exterior walls adjacent to showers or tubs shall beinsulated
Electrical/phone	Barrier shall be installed behind electrical or communication boxes on exterior wall or install air sealed boxes.	
HVAC register boots	Boots that penetrate building thermal envelope shall be sealed to the subfloor or drywall.	
Concealed Sprinklers	When required to be sealed, fire sprinklers shall only be sealed in a manner that is recommended by the manufacturer. Caulking or other adhesive sealants shall not be used to fill voids between fire sprinkler cover plates and walls or ceilings.	

AIR INFILTRATION AND TESTING

The building shall be tested and verified as having an air leakage rate not exceeding 5.0 air changes per hour (ACH). Note, if the project has selected an Air Leakage Control and Efficient Ventilation Option from WSEC Table R406.3, the maximum air leakage allowed may be reduced.

Testing shall be conducted with a blower door at a pressure of 0.2 in. w.g. For this test only, the volume of the home shall be the square feet of conditioned floor area multiplied by 8.5 feet. A written report of the results of the test shall be signed by the party conducting the test and provided to the code official.

During testing:

1. Exterior windows and doors, fireplace and stove doors shall be closed, but not sealed, beyond the intended weatherstripping or other infiltration control measures.
2. Dampers including exhaust, intake, makeup air, backdraft and flue dampers shall be closed, but not sealed beyond intended infiltration control measures.
3. Interior doors, if installed at the time of the test, shall be open, access hatches to conditioned crawl spaces and conditioned attics shall be open.
4. Exterior or interior terminations for continuous ventilation systems and heat recovery ventilators shall be sealed.
5. Heating and cooling systems, if installed at the time of the test, shall be turned off.
6. Supply and return registers, if installed at the time of the test, shall be fully open.

Exceptions:

1. Additions less than 500 square feet (46 m^2) of conditioned floor area.
2. Additions tested with the existing home having a combined maximum air leakage rate of 7 air changes per hour. To qualify for this exception, the date of construction of the existing house must be prior to the 2009 Washington State Energy Code.

Blower door test calculated flow: BLDG Volume _____ $ft.^3$ x 5 ACH / 60 min. = _____ cfm
OR Adjusted rate per Energy Credit Option 2._____
Blower door test calculated flow: BLDG Volume _____ $ft.^3$ x __ ACH / 60 min. = _____ cfm

DUCT LEAKAGE AND TESTING

1. Ducts shall be leak tested in accordance with WSU RS-33, using the maximum 4 cfm per 100 square feet of conditioned floor area. If the air handler is not installed at the time of the test, total leakage shall be less than or equal to 3 cfm per 100 square feet of conditioned floor area.

Total sq.ft. _____ sq. ft. / 100 sq.ft. X 4 cfm = _____ cfm

Exceptions:

1. The total leakage test or leakage to the outdoors is not required for ducts and air handlers located entirely within the building thermal envelope. For forced air ducts, a maximum of 10 linear feet of return ducts and 5 linear feet of supply ducts may be located outside the conditioned space. All metallic ducts located outside the conditioned space must have both transverse and longitudinal joints sealed with mastic. If flex ducts are used, they cannot contain splices. Flex duct connections must be made with nylon straps and installed using a plastic strapping tensioning tool. Ducts located in crawl spaces do not qualify for this exception.
2. A duct air leakage test shall not be required for ducts serving heat or energy recovery ventilators that are not integrated with ducts serving heating or cooling systems.

A written report of results must be signed by the party conducting the test and provided to the King County Building Inspector.

2018 Washington State Energy Code – Residential
Prescriptive Energy Code Compliance for All Climate Zones In Washington
Single Family – New & Additions (effective February 1, 2021) Version 1.2

These requirements apply to all IRC building types, including detached one- and two-family dwellings and multiple single-family dwellings (townhouses).

Project Information	Contact Information
MURRAY RESIDENCE - RESIDENCE	RICHARD FLAKE
4803 FORREST AVE SE, MERCER ISLAND, WA 98040	RICHARD@RFARCHITECTURE.COM

Instructions: This single-family project will use the requirements of the Prescriptive Path below and incorporate the minimum values listed. Based on the size of the structure, the appropriate number of additional credits are checked as chosen by the permit applicant.

Provide all information from the following tables as building permit drawings: Table R402.1 - Insulation and Fenestration Requirements by Component, Table R406.2 - Fuel Normalization Credits and 406.3 - Energy Credits.

Authorized Representative _____ ***Date*** 4/27/23

All Climate Zones (Table R402.1.1)	R-Value [a]	U-Factor [a]
Fenestration U-Factor [b]	n/a	0.30
Skylight U-Factor [b]	n/a	0.50
Glazed Fenestration SHGC [b,e]	n/a	n/a
Ceiling [g]	49	0.026
Wood Frame Wall [d,h]	21 int	0.056
Floor	30	0.029
Below Grade Wall [c,h]	10/15/21 int + TB	0.042
Slab [f] R-Value & Depth	10, 2 ft	n/a

R-values are minimums. *U-factors* and SHGC are maximums. When insulation is installed in a cavity that is less than the label or design thickness of the insulation, the compressed *R-value* of the insulation from Appendix Table A101.4 shall not be less than the *R-value* specified in the table.

b. The fenestration *U-factor* column excludes skylights.

c. "10/15/21 +5TB" means R-10 continuous insulation on the exterior of the wall, or R-15 continuous insulation on the interior of the wall, or R-21 cavity insulation plus a thermal break between the slab and the basement wall at the interior of the basement wall. "10/15/21 +5TB" shall be permitted to be met with R-13 cavity insulation on the interior of the basement wall plus R-5 continuous insulation on the interior or exterior of the wall. "5TB" means R-5 thermal break between floor slab and basement wall.

d. R-10 continuous insulation is required under heated slab on grade floors. See Section R402.2.9.1.

e. For single rafter- or joist-vaulted ceilings, the insulation may be reduced to R-38 if the full insulation depth extends over the top plate of the exterior wall.

f. R-7.5 continuous insulation installed over an existing slab is deemed to be equivalent to the required perimeter slab insulation when applied to existing slabs complying with Section R503.3.1.1. If foam plastic is used, it shall meet the requirements for thermal barriers protecting foam plastics.

g. For log structures developed in compliance with Standard ICC 400, log walls shall meet the requirements for *climate zone* 5 of ICC 400.

h. Int. (intermediate framing) denotes framing and insulation as described in Section A103.2.2 including standard framing 16 inches on center, 78% of the wall cavity insulated and headers insulated with a minimum of R-10 insulation.

2018 Washington State Energy Code – Residential
Prescriptive Energy Code Compliance for All Climate Zones in Washington
Single Family – New & Additions (effective February 1, 2021)

Each dwelling unit *in a residential building* shall comply with sufficient options from Table R406.2 (fuel normalization credits) and Table 406.3 (energy credits) to achieve the following minimum number of credits. To claim this credit, the building permit drawings shall specify the option selected and the maximum tested building air leakage, and show the qualifying ventilation system and its control sequence of operation.

1. **Small Dwelling Unit:** 3 credits
   Dwelling units less than 1,500 sf in conditioned floor area with less than 300 sf of fenestration area.
   Additions to existing building that are greater than 500 sf of heated floor area but less than 1,500 sf.
2. **Medium Dwelling Unit:** 5 credits
   All dwelling units that are not included in **#1 or #3**
3. **Large Dwelling Unit:** 7 credits
   Dwelling units exceeding 5,000 sf of conditioned floor area
4. **Additions less than 500 square feet:** 1.5 credits
   All other additions shall meet 1-3 above

Before selecting your credits on this Summary table, review the details in Table 406.3 (Single Family), on page 4.

Summary of Table R408.2 and 406.3

Heating Options	Fuel Normalization Descriptions	Credits - select ONE heating option		User Notes
1	Combustion heating minimum NAECA[b]	0.0	☐	
2	Heat pump[c]	1.0	■	
3	Electric resistance heat only - furnace or zonal	-1.0	☐	
4	DHP with zonal electric resistance per option 3.4	0.5	☐	
5	All other heating systems	-1.0	☐	
Energy Options	**Energy Credit Option Descriptions**	**Credits - select ONE energy option from each category [d]**		
1.1	Efficient Building Envelope	0.5	☐	
1.2	Efficient Building Envelope	1.0	☐	
1.3	Efficient Building Envelope	0.5	■	
1.4	Efficient Building Envelope	1.0	☐	
1.5	Efficient Building Envelope	2.0	☐	
1.6	Efficient Building Envelope	3.0	☐	
1.7	Efficient Building Envelope ☐	0.5	☐	
2.1	Air Leakage Control and Efficient Ventilation	0.5	☐	
2.2	Air Leakage Control and Efficient Ventilation	1.0	☐	
2.3	Air Leakage Control and Efficient Ventilation	1.5	☐	
2.4	Air Leakage Control and Efficient Ventilation ☐	2.0	■	
3.1[a]	High Efficiency HVAC	1.0	☐	
3.2	High Efficiency HVAC	1.0	■	
3.3[a]	High Efficiency HVAC	1.5	☐	
3.4	High Efficiency HVAC	1.5	☐	
3.5.1	High Efficiency HVAC	1.5	☐	
3.5.2	High Efficiency HVAC	1.5	☐	
3.6[a]	High Efficiency HVAC ☐	2.0	☐	
4.1	High Efficiency HVAC Distribution System	0.5	☐	
4.2	High Efficiency HVAC Distribution System ☐	1.0	■	

2018 Washington State Energy Code – Residential
Prescriptive Energy Code Compliance for All Climate Zones in Washington
Single Family – New & Additions (effective February 1, 2021)

Summary of Table R406.2 (cont.)

Energy Options	Energy Credit Option Descriptions (cont.)	Credits - select ONE energy option from each category [d]		User Notes
5.1[d]	Efficient Water Heating	0.5	☐	
5.2	Efficient Water Heating	0.5	☐	
5.3	Efficient Water Heating	1.0	☐	
5.4	Efficient Water Heating	1.5	■	
5.5	Efficient Water Heating	2.0	☐	
5.6	Efficient Water Heating ☐	2.5	☐	
6.1[e]	Renewable Electric Energy (3 credits max)	1.0	☐	
7.1	Appliance Package	0.5	☐	
	Total Credits		?	Calculate Total / Clear Form

a. An alternative heating source sized at a maximum of 0.5 W/sf (equivalent) of heated floor area or 500 W, whichever is bigger, may be installed in the dwelling unit.
b. Equipment listed in Table C403.3.2(4) or C403.3.2(5)
c. Equipment listed in Table C403.3.2(1) or C403.3.2(2)
d. You cannot select more than one option from any category EXCEPT in category 5. Option 5.1 may be combined with options 5.2 through 5.6. See Table 406.3.
e. 1.0 credit for each 1,200 kWh of electrical generation provided annually, up to 3 credits max.
See the complete Table R406.2 for all requirements and option descriptions.
f. Use the single radiobutton in the upper right of the second column to deselect radiobuttons in that group.

2018 Washington State Energy Code – Residential
Prescriptive Energy Code Compliance for All Climate Zones in Washington
Single Family – New & Additions (effective February 1, 2021)

Table 406.3 – Energy Credits (Single Family)

Option	Description	Credits: SF
1. EFFICIENT BUILDING ENVELOPE OPTIONS		
Only one option from Items 1.1 through 1.7 may be selected in this category.		
Compliance with the conductive UA targets is demonstrated using Section R402.1.4, Total UA alternative, where: [1-(Proposed UA/Target UA)] > the required %UA reduction.		
1.1	Prescriptive compliance is based on Table R402.1.1 with the following modifications: **Vertical fenestration U = 0.24**	0.5
1.2	Prescriptive compliance is based on Table R402.1.1 with the following modifications: **Vertical fenestration U = 0.20**	1.0
1.3	Prescriptive compliance is based on Table R402.1.1 with the following modifications: **Vertical fenestration U = 0.28** Floor R-38 Slab on grade R-10 perimeter and under entire slab below grade slab R-10 perimeter and under entire slab **or** Compliance based on Section R402.1.4: Reduce the Total conductive UA by 5%	0.5
1.4	Prescriptive compliance is based on Table R402.1.1 with the following modifications: **Vertical fenestration U = 0.25** Wall R-21 plus R-4 ci Floor R-38 Basement wall R-21 int plus R-5 ci Slab on grade R-10 perimeter and under entire slab below grade slab R-10 perimeter and under entire slab **or** Compliance based on Section R402.1.4: Reduce the Total conductive UA by 15%	1.0
1.5	Prescriptive compliance is based on Table R402.1.1 with the following modifications: **Vertical fenestration U = 0.22** Ceiling and single-rafter or joist-vaulted R-49 advanced Wood frame wall R-21 int plus R-12 ci Floor R-38 Basement wall R-21 int plus R-12 ci Slab on grade R-10 perimeter and under entire slab below grade slab R-10 perimeter and under entire slab **or** Compliance based on Section R402.1.4: Reduce the Total conductive UA by 30%	2.0
1.6	Prescriptive compliance is based on Table R402.1.1 with the following modifications: **Vertical fenestration U = 0.18** Ceiling and single-rafter or joist-vaulted R-60 advanced Wood frame wall R-21 int plus R-16 ci Floor R-48 Basement wall R-21 int plus R-16 ci Slab on grade R-20 perimeter and under entire slab below grade slab R-20 perimeter and under entire slab **or** Compliance based on Section R402.1.4: Reduce the Total conductive UA by 40%.	3.0
1.7	Advanced framing and raised heel trusses or rafters Vertical Glazing U-0.28 R-49 Advanced (U-0.020) as listed in Section A102.2.1, *Ceilings below a vented attic* **and** R-49 vaulted ceilings with full height of uncompressed insulation extending over the wall top plate at the eaves.	0.5

2018 Washington State Energy Code – Residential
Prescriptive Energy Code Compliance for All Climate Zones in Washington
Single Family – New & Additions (effective February 1, 2021)

Table 406.3 – Energy Credits (Single Family)

Option	Description	Credits: SF
2. AIR LEAKAGE CONTROL AND EFFICIENT VENTILATION OPTIONS		
Only one option from Items 2.1 through 2.4 may be selected in this category.		
2.1	Compliance based on R402.4.1.2: Reduce the tested air leakage to **3.0 air changes per hour** maximum at 50 Pascals **or** For R-2 Occupancies, optional compliance based on Section R402.4.1.2: Reduce the tested air leakage to **0.3 cfm/sf maximum at 50 Pascals** **and** All whole house ventilation requirements as determined by Section M1507.3 of the *International Residential Code* or Section 403.8 of the *International Mechanical Code* shall be met with a high efficiency fan(s) **(maximum 0.35 watts/cfm)**, not interlocked with the furnace fan (if present). Ventilation systems using a furnace including an ECM motor are allowed, provided that they are controlled to operate at low speed in ventilation only mode. To qualify to claim this credit, the building permit drawings shall specify the option being selected and the maximum tested building air leakage, and shall show the qualifying ventilation system and its control sequence of operation.	0.5
2.2	Compliance based on Section R402.4.1.2: Reduce the tested air leakage to **2.0 air changes per hour maximum at 50 Pascals *or*** For R-2 Occupancies, optional compliance based on Section R402.4.1.2: Reduce the tested air leakage to **0.4 cfm/sf** maximum at 50 Pascals **and** All whole house ventilation requirements as determined by Section M1507.3 of the *International Residential Code* or Section 403.8 of the *International Mechanical Code* shall be met with a heat recovery ventilation system with minimum sensible heat recovery efficiency of **0.65**. [1]	1.0
2.3	Compliance based on Section R402.4.1.2: Reduce the tested air leakage to **1.5 air changes per hour** maximum at 50 Pascals ***or*** For R-2 Occupancies, optional compliance based on Section R402.4.1.2: Reduce the tested air leakage to **0.25 cfm/sf** maximum at 50 Pascals ***and*** All whole house ventilation requirements as determined by Section M1507.3 of the *International Residential Code* or Section 403.8 of the *International Mechanical Code* shall be met with a heat recovery ventilation system with minimum sensible heat recovery efficiency of **0.75**. [1]	1.5
2.4	Compliance based on Section R402.4.1.2: Reduce the tested air leakage to **0.6 air changes per hour** maximum at 50 Pascals **or** For R-2 Occupancies, optional compliance based on Section R402.4.1.2: Reduce the tested air leakage to **0.35 cfm/sf** maximum at 50

Window, Skylight and Door Schedule

Project Information	*Contact Information*
Murray Residence - Loggia	Richard Flake
4803 forrest ave se	richard@rfarchitecture.com
Mercer Island, WA 98040	(253) 359-4039

	Ref.	U-factor	Width Feet	Width Inch	Height Feet	Height Inch	Qt.	Area	UA
Exempt Swinging Door (24 sq. ft. max.)								0.0	0.00
Exempt Glazed Fenestration (15 sq. ft. max.)								0.0	0.00

Vertical Fenestration (Windows and doors)

Component Description	Ref.	U-factor	Width Feet	Width Inch	Height Feet	Height Inch	Qt.	Area	UA
2640		0.28	1	2	4	0		10.0	2.80
								0.0	0.00
15080		0.28	1	15	8	8		120.0	33.60
								0.0	0.00
								0.0	0.00
								0.0	0.00

Window, Skylight and Door Schedule

Project Information	*Contact Information*
Murray Residence - ADU	Richard Flake
4803 forrest ave se	richard@rfarchitecture.com
Mercer Island, WA 98040	(253) 359-4039

	Ref.	U-factor	Width Qt.	Width Feet	Width Inch	Height Feet	Height Inch	Area	UA
Exempt Swinging Door (24 sq. ft. max.)								0.0	0.00
Exempt Glazed Fenestration (15 sq. ft. max.)								0.0	0.00

Vertical Fenestration (Windows and doors)

Component Description	Ref.	U-factor	Qt.	Width Feet	Width Inch	Height Feet	Height Inch	Area	UA
10060		0.28	1	2	8	2	8	5.0	1.40
4026		0.28	1	4	0	2	8	10.0	2.80
2026		0.28	1	2	0	2	8	5.0	1.40
10050		0.28	1	10	0	5	0	50.0	14.00
		0.28						0.0	0.00
3068		0.28	1	3	0	6	8	20.0	5.60
								0.0	0.00
								0.0	0.00
								0.0	0.00

PLAN NOTES

1. PRIOR TO THE START OF ANY DEMOLITION ACTIVITIES, THE CONTRACTOR SHALL INSTALL FILTER FABRIC FENCE, INLET PROTECTION, STRAW WATTLES, AND TREE PROTECTION.
2. THE EXISTING UTILITY LOCATIONS SHOWN ARE TO BE USED AS APPROXIMATE LOCATIONS ONLY. IT SHALL BE THE CONTRACTOR'S RESPONSIBILITY TO VERIFY UTILITY LOCATIONS PRIOR TO CONSTRUCTION. CONTACT UTILITIES UNDERGROUND LOCATION CENTER (811).
3. IT SHALL BE THE CONTRACTORS RESPONSIBILITY TO LOCATE PUBLIC AND/OR PRIVATE UTILITIES AND SERVICES WHICH ARE NOT THE RESPONSIBILITY OF THE UNDERGROUND LOCATION CENTER.
4. CAUTION – EXTREME HAZARD – OVERHEAD ELECTRICAL SERVICE LINES ARE GENERALLY NOT SHOWN ON THE DRAWINGS. ELECTRICAL LINES, IF SHOWN, ARE LOCATED POINT–TO–POINT, POWER POLE–TO–POWER POLE CONNECTION. THE CONTRACTOR IS RESPONSIBLE FOR DETERMINING THE EXTENT OF HAZARD CREATED BY OVERHEAD ELECTRICAL POWER IN ALL AREAS AND SHALL FOLLOW PROCEDURES DURING CONSTRUCTION AS REQUIRED BY LAW AND REGULATION. PRIOR TO CONSTRUCTION, THE CONTRACTOR SHALL MEET WITH UTILITY OWNERS AND DETERMINE THE EXTENT OF HAZARD AND REMEDIAL MEASURES AND SHALL TAKE WHATEVER PRECAUTIONS MAY BE REQUIRED.
5. REMOVE EXISTING STRUCTURE.
6. THE CONTRACTOR AND OWNER SHALL COORDINATE ALL INSPECTIONS. ALL COSTS INCURRED SHALL BE THE CONTRACTOR'S RESPONSIBILITY.
7. TREE PROTECTION. SEE DETAIL ON SHEET C3.2.
8. EXISTING TREE TO REMAIN.
9. REMOVE EXISTING CONCRETE DRIVEWAY. CONTRACTOR TO COORDINATE DRIVEWAY REMOVAL WITH NEW DRIVEWAY AND GRADING TO MAINTAIN A CONSTRUCTION ACCESS.
10. EXISTING CB TO REMAIN. DO NOT DISTURB.
11. EXISTING CB, REMOVE AND REPLACE (SEE SHEET C3.0).
12. EXISTING STORM CONVEYANCE TO REMAIN. DO NOT DISTURB.
13. REMOVE EXISTING ROCKERY.
14. SEE ARBORIST REPORT FOR TREE ANALYSIS.
15. REMOVE EXISTING FENCE.
16. EXSTING TREES TO BE REMOVED.
17. REMOVE EXISTING GREENHOUSE STRUCTURE. DO NOT DISTURB EXISTING STORM CONVEYANCE.
18. EXISTING DRIVEWAY TO BE USED AS THE CONSTRUCTION ACCESS.
19. ALL DEMOLISHED MATERIALS ARE TO BE LEGALLY DISPOSED OFFSITE.
20. CONTRACTOR TO NOTIFY AND COORDINATE WITH THE PROJECT ARBORIST PRIOR TO ANY TREE REMOVAL.
21. EXISTING CONVEYANCE TO BE REMOVED AND REPLACED (SEE SHEET C3.0).
22. SAWCUT DRIVEWAY TO PROVIDE A SMOOTH CONFORM.
23. CONTRACTOR TO COORDINATE WITH UTILITY PURVEYOR WHEN REMOVING EXISTING UTILITY CONNECTIONS.
24. REMOVE EXISTING DRAIN.
25. REMOVE EXISTING CONCRETE STAIRS.
26. END FILTER FABRIC FENCE FORM THE SOUTHWEST.
27. END FILTER FABRIC FENCE FROM THE SOUTH.
28. STOCKPILE/STAGING AREA (LOCATION APPROXIMATE. LIMITS TO BE ADJUSTED AS CONSTRUCTION PROGRESSES).
29. COORDINATE WITH PROJECT ARBORIST BEFORE REMOVING EXISTING STRUCTURES WITHIN THE TREE PROTECTION FENCE.
30. REMOVE EXISTING RETAINING WALL.

DEMOLITION LEGEND

- CL & FF — FILTER FABRIC FENCE AT CLEARING LIMITS , LIMITS OF EXCAVATION EXCEPT AS NOTED
- IP — INLET PROTECTION
- CE — CONSTRUCTION ENTRANCE
- EXISTING STRUCTURE, BUILDING, ROCKERY, PATIO, CONCRETE, ETC TO BE REMOVED
- SW — STRAW WATTLES
- TP — TREE PROTECTION SEE NOTES AND DETAIL ON SHEET 3.2
- TREES TO BE REMOVED

DEMOLITION NOTES

STRUCTURE REMOVAL:	1,716 SQ.FT.
HARD SURFACE REMOVAL:	4,265 SQ.FT.

NORTH

GRAPHIC SCALE
10 0 5 10 20
(IN FEET)
1 inch = 10 ft.

TREE REFERENCE

#287	TO REMAIN
#288	TO RETAIN
#289	TO RETAIN
#290	TO BE REMOVED
#291	TO RETAIN
#292	TO BE REMOVED
#293	TO BE REMOVED
#294	TO BE REMOVED
#295	TO BE REMOVED
#296	TO BE REMOVED
#297	TO BE REMOVED
#298	TO BE REMOVED
#299	TO BE REMOVED
#300	TO RETAIN
#744	TO RETAIN
#745	TO RETAIN
#746	TO RETAIN
#748	TO RETAIN
#750	TO RETAIN
#751	TO BE REMOVED

FOR CONTINUATION SEE BELOW

DOCK ACCESS AND BOAT SLIP EASEMENT PER REC NO. 5998359
10" C.I.P.
CONCRETE DOCK
COVERED BOAT LIFT
10'
APPROX LOCATION OF 10' SEWER EASEMENT PER REC NO. 5867888
ORDINARY HIGH WATER LINE (ELEVATION 21.85)

FOR CONTINUATION SEE ABOVE

ORDINARY HIGH WATER LINE (ELEVATION 21.85)
10" C.I.P.
SSMH (HYDRAULIC GRADIENT CONTROL) RIM=30.87' IE(SW) 8"CONC=24.37'
CMP 12" IE= 24.85
CB (TYPE 1 SOLID LID) RIM=34.02' IE(E) 12"PVC=31.52' IE(W) 12"CONC=31.52'
CB (TYPE 1 SOLID LID) RIM=50.52' IE(E) 12"PVC=47.62' IE(SW) 12"PVC=48.12' IE(W) 12"PVC=47.52'
CB (TYPE 1) RIM=52.04' IE(E) 8"PVC=49.59' IE(SW) 12"PVC=49.29'
CB (TYPE 1 SOLID LID) RIM=52.17' IE(NE) 12"PVC=49.22' IE(W) 12"PVC=49.17' IE(E) 6"PVC=50.67'
CB (TYPE 1) RIM=68.98' IE(E) 8"PVC=63.94' IE(W) 8"PVC=63.79'
CB (TYPE 1 SOLID LID) RIM=77.69' IE(W) 8"PVC=72.79' IE(NE) 8"PVC=68.79'
EX SSMH IE=14.63
STORM EASEMENT PER RECORDING NO. 20180413000895.
STORM EASEMENT ANGLE POINT
STORM EASEMENT PER RECORDING NO. 20180413000895.
EX. STORM PIPE TO REMAIN, PROTECT IN–PLACE AS NEEDED.
STORM EASEMENT PER RECORDING NO. 20180413000895.
4.00' EASEMENT PER REC NO 2499255
LANDSCAPE EASEMENT REC. NO. 20180413000894
SSMH RIM=89.25' IE(SE,N) 12"CA =83.94'(C.C.)
PROTECT EX. UTILITIES
CLEARING LIMITS ONLY, NO FILTER FABRIC FENCE.
EX. INGRESS EGRESS EASEMENT PER RECORDING NUMBER 9005099001
COORDINATE WITH OWNER FOR CLEARING IN THIS AREA.
TEL SENTRY

811 Know what's below. Call before you dig.

RF ARCHITECTURE
7421 214TH AVENUE EAST
BONNEY LAKE, WA 98391
253–359–4039

MURRAY RESIDENCE
4803 FOREST AVENUE SE
MERCER ISLAND, WA 98040

Apex Engineering
2601 South 35th St., Suite 200
Tacoma, Washington 98409–7479
(253) 472–4464 FAX (253) 472–4699

PETER R. JACOBS — STATE OF WASHINGTON — 22251 — REGISTERED PROFESSIONAL ENGINEER
09-15-2023

SEPT. 15, 2023
SEC 13/24 T24N R04E

DEMOLITION /TREE PLAN

C1.0
APEX JOB NO. 34578
© APEX ENGINEERING LLC 2023

NORTH
TACOMA, WA
MEX

GRAPHIC SCALE

10 0 5 10 20

(IN FEET)
1 inch = 10 ft.

811
Know what's below.
Call before you dig.

NOTES

1. PERMANENT CUT AND FILL SLOPES TO BE 2.5H:1V OR FLATTER.
2. PER MICC 19.02.20(H)(2) NO STRUCTURES ARE PROPOSED IN EASEMENTS.

T.E.S.C. LEGEND

- FILTER FABRIC FENCE AT CLEARING LIMITS AND LIMITS OF EXCAVATION EXCEPT AS NOTED AND SHOWN ON SHEET C1.0 — CL FF
- INLET PROTECTION — IP
- CONSTRUCTION ENTRANCE — CE
- HYDROSEED AND MULCH — ML
- STRAW WATTLES — SW
- TREE PROTECTION SEE NOTES AND DETAIL ON SHEET 3.2 — TP

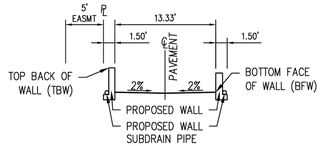

TYPICAL DRIVEWAY SECTION
(LOOKING NORTH)
N.T.S.

PLAN NOTES

1. THE EXISTING UTILITY LOCATIONS SHOWN ARE TO BE USED AS APPROXIMATE LOCATIONS ONLY. IT SHALL BE THE CONTRACTOR'S RESPONSIBILITY TO VERIFY UTILITY LOCATIONS PRIOR TO CONSTRUCTION. CONTACT UTILITIES UNDERGROUND LOCATION CENTER (811).
2. IT SHALL BE THE CONTRACTORS RESPONSIBILITY TO LOCATE PUBLIC AND/OR PRIVATE UTILITIES AND SERVICES WHICH ARE NOT THE RESPONSIBILITY OF THE UNDERGROUND LOCATION CENTER.
3. CAUTION – EXTREME HAZARD – OVERHEAD ELECTRICAL SERVICE LINES ARE GENERALLY NOT SHOWN ON THE DRAWINGS. ELECTRICAL LINES, IF SHOWN, ARE LOCATED POINT–TO–POINT, POWER POLE–TO–POWER POLE CONNECTION. THE CONTRACTOR IS RESPONSIBLE FOR DETERMINING THE EXTENT OF HAZARD CREATED BY OVERHEAD ELECTRICAL POWER IN ALL AREAS AND SHALL FOLLOW PROCEDURES DURING CONSTRUCTION AS REQUIRED BY LAW AND REGULATION. PRIOR TO CONSTRUCTION, THE CONTRACTOR SHALL MEET WITH UTILITY OWNERS AND DETERMINE THE EXTENT OF HAZARD AND REMEDIAL MEASURES AND SHALL TAKE WHATEVER PRECAUTIONS MAY BE REQUIRED.
4. REMOVE ALL E.S.C. ITEMS AND LEGALLY DISPOSE OF THEM OFFSITE AFTER THE SITE IS PERMANENTLY STABILIZED.
5. THE CONTRACTOR AND OWNER SHALL COORDINATE ALL INSPECTIONS. ALL COSTS INCURRED SHALL BE THE CONTRACTOR'S RESPONSIBILITY.
6. TREE PROTECTION. SEE DETAIL ON SHEET C3.1.
7. EXISTING TREE TO REMAIN.
8. EXISTING CB TO REMAIN. DO NOT DISTURB.
9. EXISTING CB, REMOVE AND REPLACE (SEE SHEET C3.0).
10. EXISTING STORM CONVEYANCE TO REMAIN. DO NOT DISTURB.
11. SEE ARBORIST REPORT FOR TREE ANALYSIS.
12. REMOVE EXISTING FENCE.

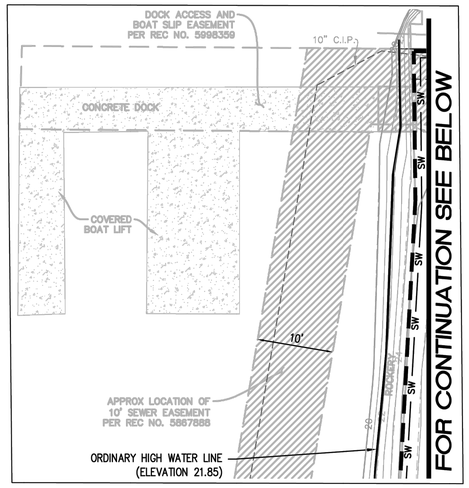

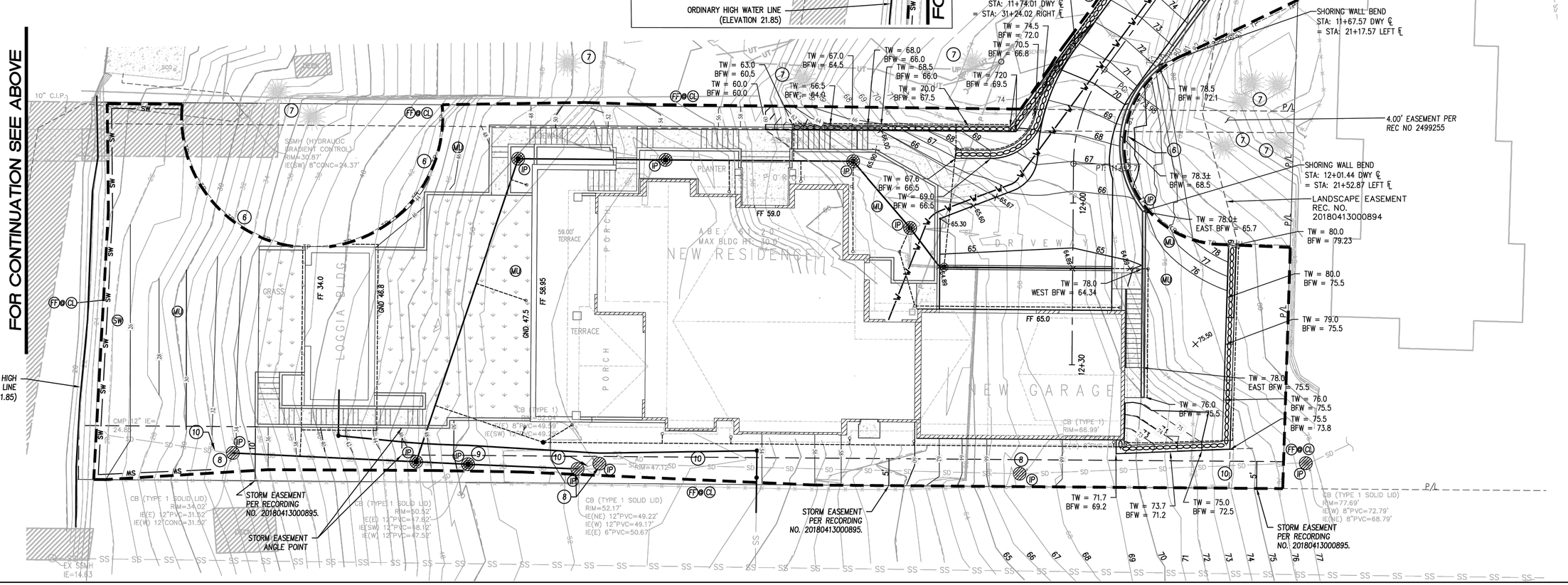

RF ARCHITECTURE
7421 214TH AVENUE EAST
BONNEY LAKE, WA 98391
253-359-4039

MURRAY RESIDENCE
4803 FOREST AVENUE SE
MERCER ISLAND, WA 98040

Apex Engineering
260I South 35th St., Suite 200
Tacoma, Washington 98409–7499
(253) 472–4949 FAX (253) 472–7999

HELEN R. JACOBS
STATE OF WASHINGTON
42241
REGISTERED PROFESSIONAL ENGINEER
09-15-2023

SEPT. 15, 2023

SEC 13/24 T24N R04E

TESC AND GRADING

C2.0

APEX JOB NO. 34578

© APEX ENGINEERING LLC 2023

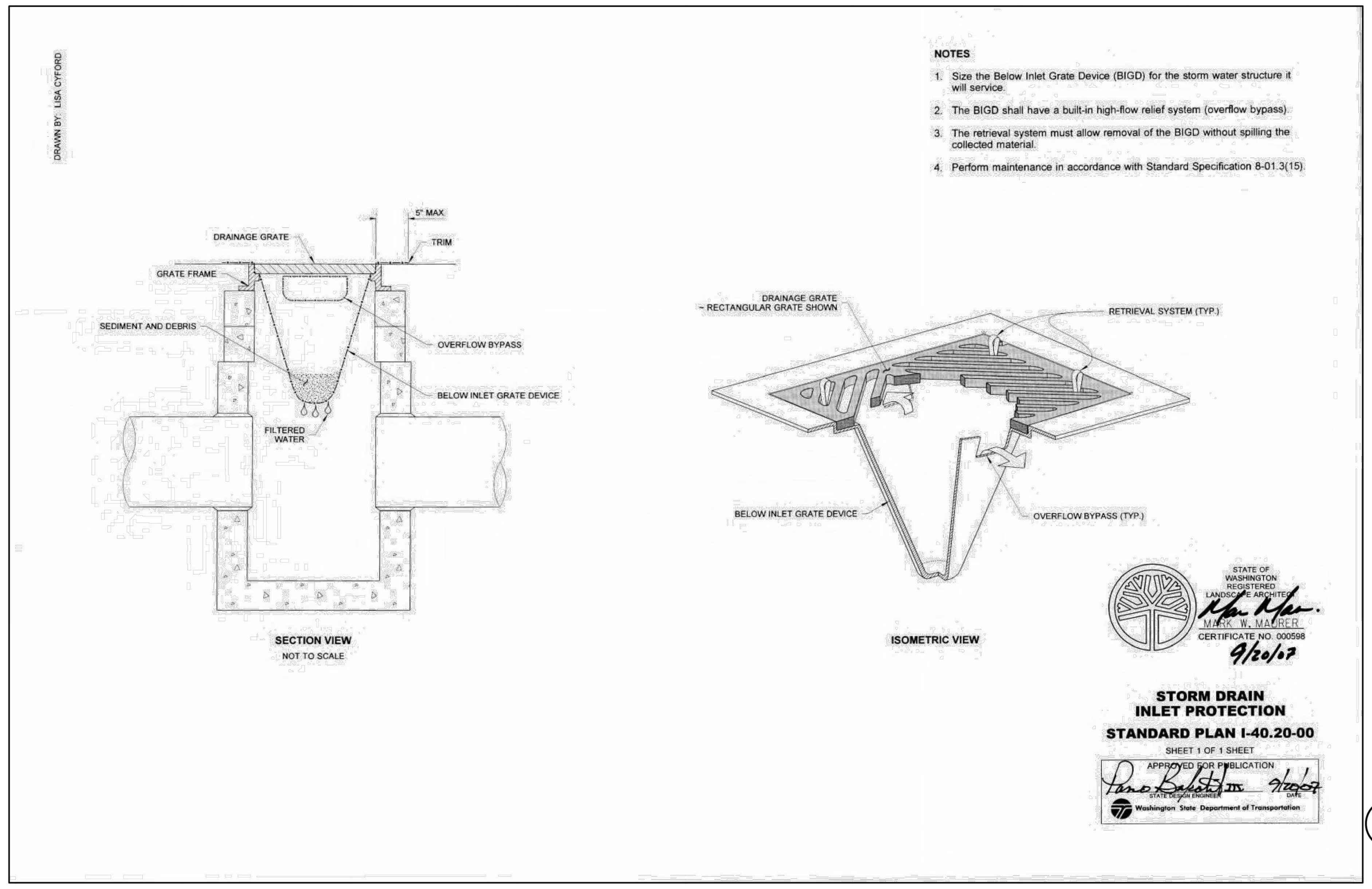

(IP)

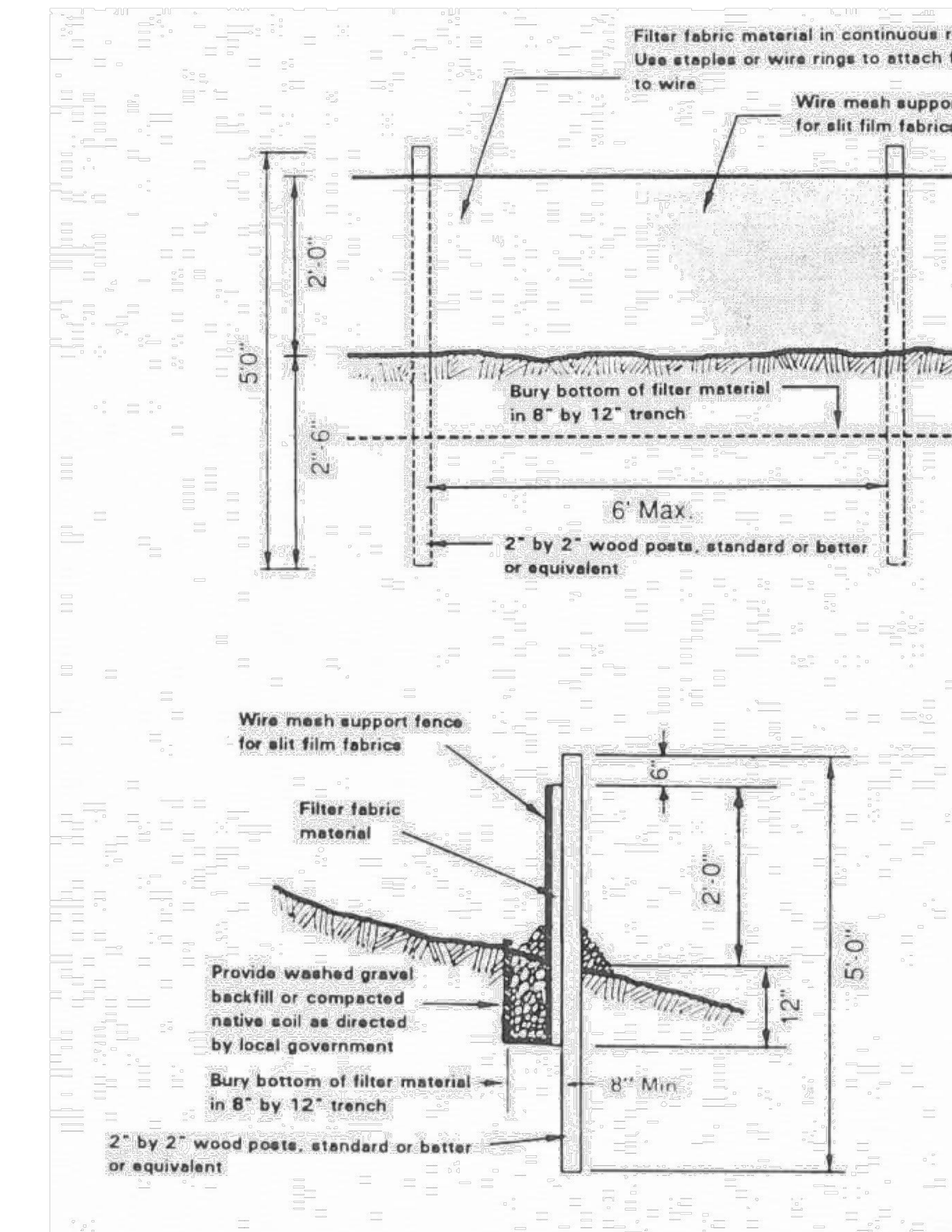

(FF)

FILTER FABRIC FENCE DETAIL

NTS

FILTER FABRIC FENCE NOTES:

1. THE FILTER FABRIC SHALL BE PURCHASED IN A CONTINUOUS ROLL CUT TO THE LENGTH OF THE BARRIER TO AVOID USE OF JOINTS. WHEN JOINTS ARE NECESSARY, FILTER CLOTH SHALL BE SPLICED TOGETHER ONLY AT A SUPPORT POST, WITH A MINIMUM 6 INCH OVERLAP, AND BOTH ENDS SECURELY FASTENED TO THE POST.
2. POSTS SHALL BE SPACED A MAXIMUM OF 6 FEET APART AND DRIVEN SECURELY INTO THE GROUND A MINIMUM OF 30 INCHES (WHERE PHYSICALLY POSSIBLE).
3. A TRENCH SHALL BE EXCAVATED APPROXIMATELY 8 INCHES WIDE AND 12 INCHES DEEP ALONG THE LINE OF POSTS AND UPSLOPE FROM THE BARRIER. THE TRENCH SHALL BE CONSTRUCTED TO FOLLOW THE CONTOUR.
4. WHEN SLIT FILM FILTER FABRIC IS USED, A WIRE MESH SUPPORT FENCE SHALL BE FASTENED SECURELY TO THE UPSLOPE SIDE OF THE POSTS USING HEAVY DUTY WIRE STAPLES AT LEAST 1 INCH LONG, TIE WIRES OR HOG RINGS. THE WIRE SHALL EXTEND INTO THE TRENCH A MINIMUM OF 4 INCHES AND SHALL NOT EXTEND MORE THAN 36 INCHES ABOVE THE ORIGINAL GROUND SURFACE.
5. SLIT FILM FILTER FABRIC SHALL BE WIRED TO THE FENCE, AND 20 INCHES OF THE FABRIC SHALL EXTEND INTO THE TRENCH. THE FABRIC SHALL NOT EXTEND MORE THAN 36 INCHES ABOVE THE ORIGINAL GROUND SURFACE. FILTER FABRIC SHALL NOT BE STAPLED TO EXISTING TREES. OTHER TYPES OF FABRIC MAY BE STAPLED TO THE FENCE.
6. WHEN EXTRA-STRENGTH OR MONOFILAMENT FABRIC AND CLOSER POST SPACING ARE USED, THE WIRE MESH SUPPORT FENCE MAY BE ELIMINATED. IN SUCH A CASE, THE FILTER FABRIC IS STAPLED OR WIRED DIRECTLY TO THE POSTS WITH ALL OTHER PROVISIONS OF FILTER FABRIC NOTES APPLYING. EXTRA CARE SHOULD BE USED WHEN JOINING OR OVERLAPPING THESE FILTER FABRICS.
7. LOCAL GOVERNMENTS MAY SPECIFY THE USE OF PROPERLY COMPACTED NATIVE MATERIAL. IN MANY INSTANCES, THIS MAY BE THE PREFERRED ALTERNATIVE BECAUSE THE SOIL FORMS A MORE CONTINUOUS CONTACT WITH THE TRENCH BELOW, AND USE OF NATIVE MATERIALS CUTS DOWN ON THE NUMBER OF TRIPS THAT MUST BE MADE ON AND OFF-SITE. IF GRAVEL IS USED INSTEAD, THE TRENCH SHALL BE BACKFILLED WITH ¾-INCH MINIMUM DIAMETER WASHED GRAVEL. CARE MUST BE TAKEN WHEN USING GRAVEL TO ENSURE GOOD CONTACT BETWEEN THE FABRIC AND THE TRENCH BOTTOM TO PREVENT UNDERCUTTING.
8. FILTER FABRIC FENCES SHALL BE REMOVED WHEN THEY HAVE SERVED THEIR USEFUL PROPOSE, BUT NOT BEFORE THE UPSLOPE AREA HAS BEEN PERMANENTLY STABILIZED. RETAINED SEDIMENT MUST BE REMOVED AND PROPERLY DISPOSED OF, OR MULCHED AND SEEDED.
9. INSPECT IMMEDIATELY AFTER EACH RAINFALL, AND AT LEAST DAILY DURING PROLONGED RAINFALL. REPAIR AS NECESSARY.
10. SEDIMENT MUST BE REMOVED WHEN IT REACHES APPROXIMATELY ONE THIRD THE HEIGHT OF THE FENCE, ESPECIALLY IF HEAVY RAINS ARE EXPECTED.
11. ANY SEDIMENT DEPOSITS REMAINING IN PLACE AFTER THE FILTER FENCE IS NO LONGER REQUIRED SHALL BE DRESSED TO CONFORM WITH THE EXISTING GRADE, PREPARED AND SEEDED.

TESC NOTES

1. REMOVE EXCESS SOIL FROM THE SITE AS SOON AS POSSIBLE AFTER BACKFILLING.
2. STABILIZE DENUDED AREAS OF THE SITE BY MULCHING, SEEDING, PLANTING, OR SODDING.
3. ADJACENT PROPERTIES SHALL BE PROTECTED FROM SEDIMENT DEPOSITION BY APPROPRIATE USE OF VEGETATIVE BUFFER STRIPS, SEDIMENT BARRIERS OR FILTERS, DIKES OR MULCHING, OR BY A COMBINATION OF THESE MEASURES AND OTHER APPROPRIATE BMPS.
4. CONSTRUCTION VEHICLE ACCESS SHALL BE, WHENEVER POSSIBLE, LIMITED TO ONE ROUTE AND SHALL USE THE CONSTRUCTION ACCESS. THIS MEASURE REQUIRES PERIODIC INSPECTION AND MAINTENANCE INCLUDING WASHING, TOP-DRESSING WITH ADDITIONAL STONE, REWORKING AND COMPACTION.
5. PROVIDE FOR PERIODIC STREET CLEANING TO REMOVE ANY SEDIMENT THAT MAY HAVE BEEN TRACKED OUT, OF THE PROJECT SITE. SEDIMENT SHOULD BE REMOVED BY SHOVELING OR SWEEPING AND CAREFULLY REMOVED TO A SUITABLE DISPOSAL AREA WHERE IT WILL NOT BE RE-ERODED.
6. REGULARLY INSPECT ALL EROSION AND SEDIMENT CONTROL BMPS INSTALLED, ESPECIALLY AFTER ANY LARGE STORMS. MAINTENANCE, INCLUDING REMOVAL AND PROPER DISPOSAL OF SEDIMENT SHOULD BE DONE AS NECESSARY (GENERALLY WHEN ONE-HALF OR MORE OF THE TOTAL CAPACITY OF THE SYSTEM IS FILLED WITH SEDIMENT).
7. ALL TEMPORARY EROSION AND SEDIMENT CONTROL MEASURES SHALL BE REMOVED WITHIN 30 DAYS AFTER FINAL SITE STABILIZATION IS ACHIEVED OR AFTER THE TEMPORARY BMPS ARE NO LONGER NEEDED. TRAPPED SEDIMENT SHALL BE REMOVED OR STABILIZED ON SITE. DISTURBED SOIL AREAS RESULTING FROM REMOVAL SHALL BE PERMANENTLY STABILIZED.

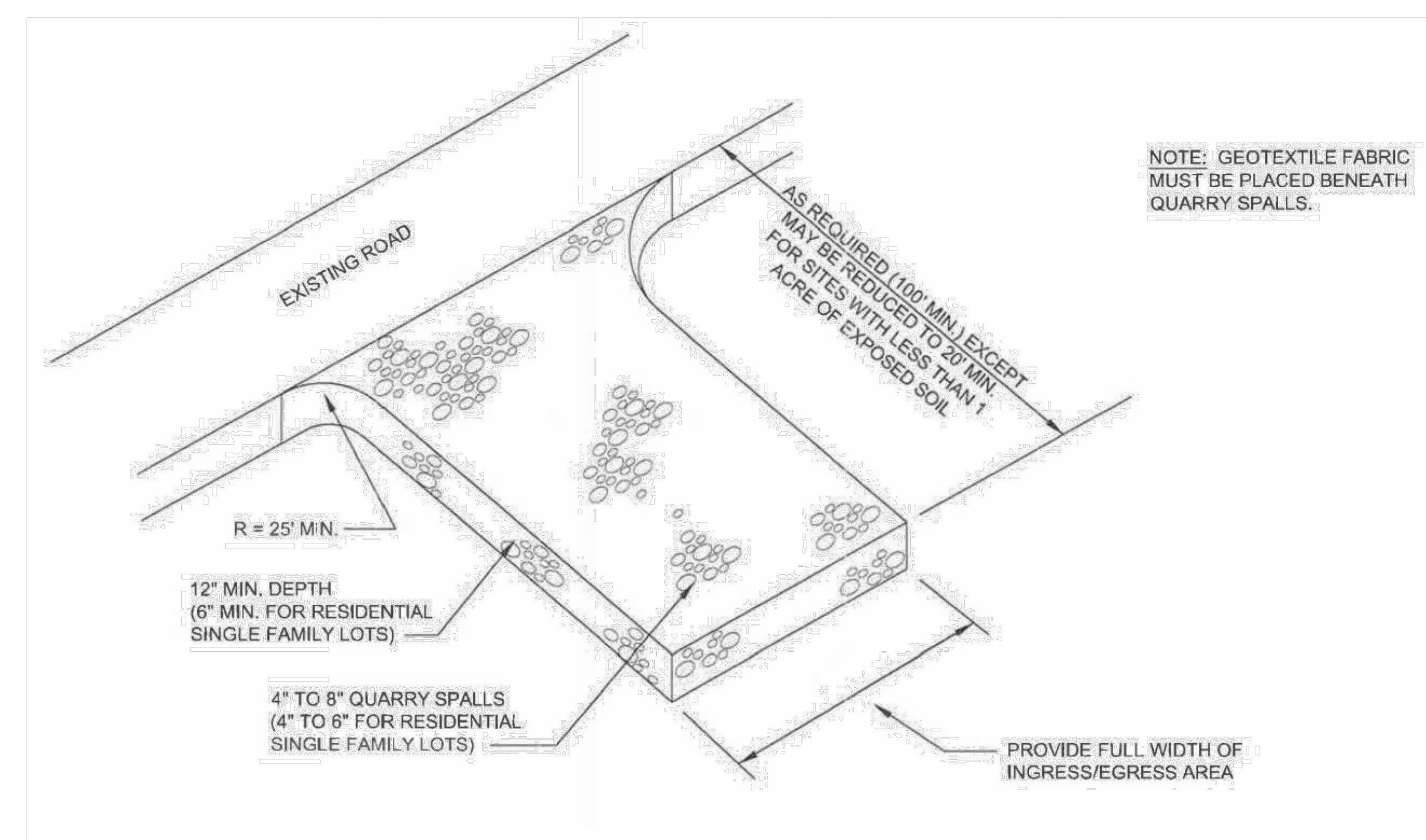

(CE)

CONSTRUCTION ENTRANCE DETAIL

NTS

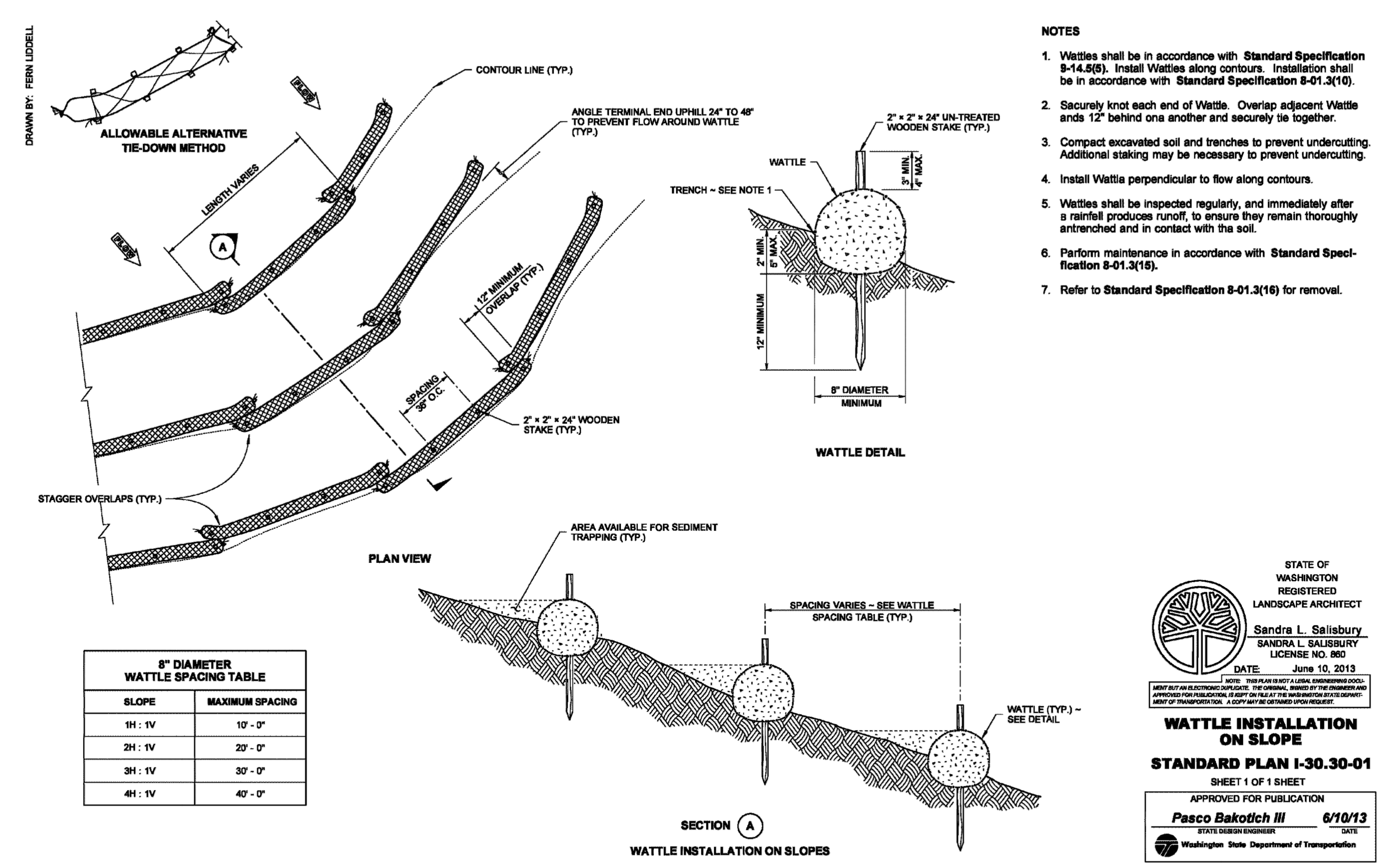

(SW)

SEED, FERTILIZE, AND MULCH NOTES:

1. TIME OF PLANTING – PLANTING SHOULD PREFERABLY BE DONE BETWEEN APRIL 1 AND JUNE 30, AND SEPTEMBER 1 THROUGH OCTOBER 31. IF PLANTING IS DONE IN THE MONTHS OF JULY AND AUGUST, IRRIGATION MAY BE REQUIRED. IF PLANTING IS DONE BETWEEN NOVEMBER 1 AND MARCH 31, MULCHING SHALL BE REQUIRED IMMEDIATELY AFTER PLANTING. IF SEEDING IS DONE DURING THE SUMMER MONTHS, IRRIGATION OF SOME SORT WILL PROBABLY BE NECESSARY.
2. SITE PREPARATION – BEFORE SEEDING, INSTALL NEEDED SURFACE RUNOFF CONTROL MEASURES SUCH AS GRADIENT TERRACES, INTERCEPTOR DIKE/SWALES, LEVEL SPREADERS, AND SEDIMENT BASINS.
3. SEEDBED PREPARATION – THE SEEDBED SHOULD BE FIRM WITH A FAIRLY FINE SURFACE. PERFORM ALL CULTURAL OPERATIONS ACROSS OR AT RIGHT ANGLES TO THE SLOPE. A MINIMUM OF 2–4 INCHES OF TILLED TOPSOIL IS REQUIRED.
4. FERTILIZATION – AS PER SUPPLIERS AND/OR SOIL CONSERVATION SERVICE RECOMMENDATIONS. DEVELOPEMENTS ADJACENT TO WATER BODIES MUST USE NON-PHOSPHORUS FERTILIZER.
5. "HYDRO-SEEDING" APPLICATIONS WITH APPROVED SEED-MULCH-FERTILIZER MIXTURES MAY ALSO BE USED.

EROSION CONTROL SEEDING MIX:

1. SEEDING MIXTURE SHALL BE AS FOLLOWS AND SHALL BE APPLIED AT THE RATE OF 120 LBS/ACRE:

NAME	PROPORTIONS BY WEIGHT	PERCENT PURITY	PERCENT GERMINATION
REDTOP (AGROSTIS ALBA)	10	92	90
ANNUAL RYE (LOLIUM MULTIFLORUM)	40	98	90
CHEWINGS FESCUE (FESTUCA RUBRA COMMUTATA)	40	97	80
WHITE DUTCH CLOVER (TRIFOLIUM REPENS)	10	96	90

2. THE OPTIMUM SEEDING WINDOWS FOR WESTERN WASHINGTON ARE APRIL 1 THROUGH JUNE 30 AND SEPTEMBER 1 THROUGH OCTOBER 1.
3. SEEDING THAT OCCURS BETWEEN JULY 1 AND AUGUST 30 WILL REQUIRE IRRIGATION UNTIL 75% GRASS COVER IS ESTABLISHED. SEEDING THAT OCCURS BETWEEN OCTOBER 1 AND MARCH 30 WILL REQUIRE A MULCH OR PLASTIC COVER UNTIL 75% GRASS COVER IS ESTABLISHED.
4. BEFORE SEEDING, INSTALL NEEDED SURFACE RUNOFF CONTROL MEASURES SUCH AS GRADIENT TERRACES, INTERCEPTOR DIKES, SWALES, LEVEL SPREADERS AND SEDIMENT BASINS.
5. THE SEEDBED SHALL BE FIRM WITH A FAIRLY FINE SURFACE, FOLLOWING SURFACE ROUGHENING. PERFORM ALL OPERATIONS ACROSS OR AT RIGHT ANGLES TO THE SLOPE.
6. FERTILIZERS ARE TO BE USED ACCORDING TO SUPPLIERS RECOMMENDATIONS. AMOUNTS USED SHOULD BE MINIMIZED, ESPECIALLY ADJACENT TO WATER BODIES AND WETLANDS.

RF ARCHITECTURE
7421 214TH AVENUE EAST
BONNEY LAKE, WA 98391
253-359-4039

MURRAY RESIDENCE
4803 FOREST AVENUE SE
MERCER ISLAND, WA 98040

Apex Engineering
2601 South 35th St., Suite 200
Tacoma, Washington 98409-7479
(253) 473-4494 FAX: (253) 473-0599

FELIX R. JACOBS — STATE OF WASHINGTON — 42244 — REGISTERED PROFESSIONAL ENGINEER
09-15-2023

SEPT. 15, 2023

SEC 13/24 T24N R04E

TESC NOTES AND DETAILS

C2.1

APEX JOB NO. 34578

© APEX ENGINEERING LLC 2023

CONSTRUCTION NOTES:

1. AIR EXCAVATION REQUIRED FOR CONSTRUCTION WITHIN THE EXISTING TREE DRIPLINE. TRAQ QUALIFIED ARBORIST TO BE PRESENT TO OBSERVE AND PROVIDE GUIDANCE DURING EXCAVATION OPERATIONS. SEE ALSO SHEET C1.0.

(2) INSTALL ACO TRENCH DRAIN W/ INLINE CB PER DETAIL SHEET C3.1. GRATE ELEV = 64.89±, I.E. 6" (W) = 62.62±.

(3) 9 LF 6" ø ADS-N12 @ 25.22%

(4) CB#1, INSTALL NYLOPLAST DRAIN BASIN (OR APPROVED EQUAL). RIM = 65.00±, IE = 60.35±.

(5) 16 LF 6" ø ADS-N12 @ 12.75%

(6) CB#2, INSTALL NYLOPLAST DRAIN BASIN (OR APPROVED EQUAL). RIM = 64.00±, I.E. = 58.31±.

(7) 35 LF 6" ø ADS-N12 @ 22.77%

(8) CB#3, INSTALL NYLOPLAST DRAIN BASIN (OR APPROVED EQUAL). RIM = 55.00±, I.E. = 50.34±.

(9) 27 LF 6" ø ADS-N12 @ 20.70%

(10) CB#4, INSTALL NYLOPLAST DRAIN BASIN (OR APPROVED EQUAL). RIM = 47.50±, IE = 44.75±.

(11) 59 LF 6" ø ADS-N12 @ 2.92%

(12) CONNECT WALL DRAIN TO PROPOSED ROOF DRAIN LINE.

(13) CONNECT WALL DRAIN TO PROPOSED STORM SYSTEM.

(14) EXISTING CB, REMOVE AND REPLACE WITH NYLOPLAST DRAIN BASIN (OR APPROVED EQUAL). RIM = 50.22±, I.E. 12" (E,W) = 44.27±, I.E. 12" (SW) = 48.12±.

(15) WATER SERVICE TO NEW STRUCTURE.

(16) POWER CONNECTION FOR NEW STRUCTURE. COORDINATE FINAL LOCATION WITH ARCHITECT.

(17) GAS CONNECTION FOR NEW STRUCTURE. COORDINATE FINAL LOCATION WITH ARCHITECT.

18. "DS" INDICATES DOWNSPOUT LOCATION. (SEE ARCHITECTURAL PLANS). DOWNSPOUT INVERT ELEVATIONS TO BE 1.5-FT BELOW FINISHED GRADE.

19. "RDP" INDICATES DOWNSPOUT PIPING. DOWNSPOUT PIPE TO BE 4" PVC SDR35 AT A MINIMUM SLOPE OF 1%.

(20) EXISTING STORM PIPE TO REMAIN.

(21) CONNECT RETAINING WALL SUBDRAIN TO THE PROPOSED CONVEYANCE SYSTEM WITH NON-PERFORATED PIPE. SEE DETAIL ON SHEET C3.1.

(22) EXISTING CB TO REMAIN. DO NOT DISTURB.

(23) EXISTING CB TO REMAIN. DO NOT DISTURB, EXCEPT TO MAKE NEW CONNECTION.

24. SEE SHEET C3.2 FOR POST-CONSTRUCTION SOIL QUALITY NOTES.

25. TV INSPECTION OF THE EXISTING STORM PIPE TO THE LAKE IS REQUIRED. IF THE RESULT OF THE TV INSPECTION IS NOT IN SATISFACTORY CONDITION, AS DETERMINED BY THE CITY OF MERCER ISLAND INSPECTOR, REPLACEMENT OF THE EXISTING STORM PIPE IS REQUIRED.

26. SEE SHEET C1.0 FOR TREE REFERENCE.

27. SEE SHEET C3.1 FOR DRIVEWAY CENTERLINE PROFILE.

(28) CONNECT RETAINING WALL SUBDRAIN TO THE PROPOSED TRENCH DRAIN WITH NON-PERORATED PIPE. SEE DETAIL ON SHEET C3.1.

(29) REMOVE EXISTING PIPE AND REPLACE WITH 20 LF 12" ADS-N12 @ 24.50%

(30) 38 LF 12" ADS-N12 @ 28.98%

(31) INSTALL PIPE ANCHOR. SEE DETAIL ON SHEET C3.1.

(32) 6 LF 12" ADS-N12 @ 28.98%

(33) CB#9, INSTALL NYLOPLAST DRAIN BASIN (OR APPROVED EQUAL). RIM = 46.20±, I.E.(E,W) = 42.53±, I.E.(N) = 43.03±.

(34) COORDINATE GATE LOCATION/DETAILS WITH MERCER ISLAND FIRE DEPARTMENT.

35. PLANTER AREAS TO CONTAIN MINIMUM 2-FT SOIL DEPTH.

(36) RPBA, SEE SHEET C3.2 FOR NOTES AND DETAIL.

37. "WD" INDICATES APPROXIMATE WALL SUBDRAIN INVERT.

(38) REMOVE 44 LF EXISTING STORM PIPE BETWEEN (14) AND (39) AND REPLACE WITH NEW PIPE (30) AND (32)

(39) EXISTING CB TO REMAIN. DO NOT DISTURB, EXCEPT TO MAKE NEW CONNECTION.

SIDE SEWER CONSTRUCTION NOTES:

(A) CONNECT PROPOSED SIDE SEWER TO EXISTING SIDE SEWER STUB. EXISTING I.E. = 45.07±

(B) 6 LF 6" PVC SDR-35 SIDE SEWER AT 2.0% MINIMUM SLOPE

(C) INSTALL NDS 675P BACKWATER VALVE (OR APPROVED EQUAL) AND ASSOCIATED VALVE BOX PER MERCER ISLAND STANDARD DETAIL S-26

(D) 5 LF 6" PVC SDR-35 SIDE SEWER AT 2.0% MINIMUM SLOPE

(E) INSTALL NEW SEWER CLEANOUT 3' FROM STRUCTURE. RIM = 53.90±, I.E.=45.30± WITH TEE (W) AND TAPPED CAP 2-IN X 6-IN MJ

(F) 78 LF 2" PVC SCHEDULE 40 PRESSURE PIPE

(G) INSTALL ZOELLER MODEL 211 GRINDER PUMP (OR APPROVED EQUAL) AND ASSOCIATED BASIN WITH RISERS AS NECESSARY TO BRING TO FINISHED GRADE. RIM = 40.80±, I.E. = 32.50±

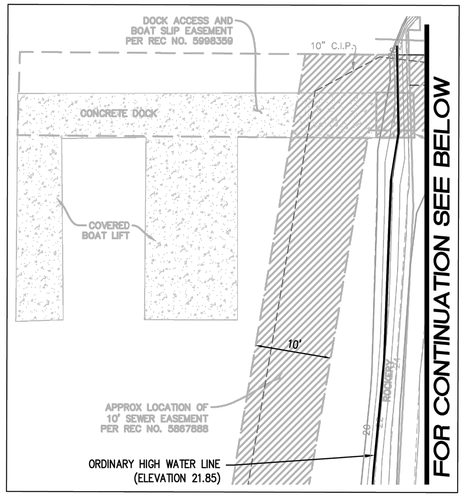

GRAPHIC SCALE
10 0 5 10 20
(IN FEET)
1 inch = 10 ft.

NORTH (GRID)

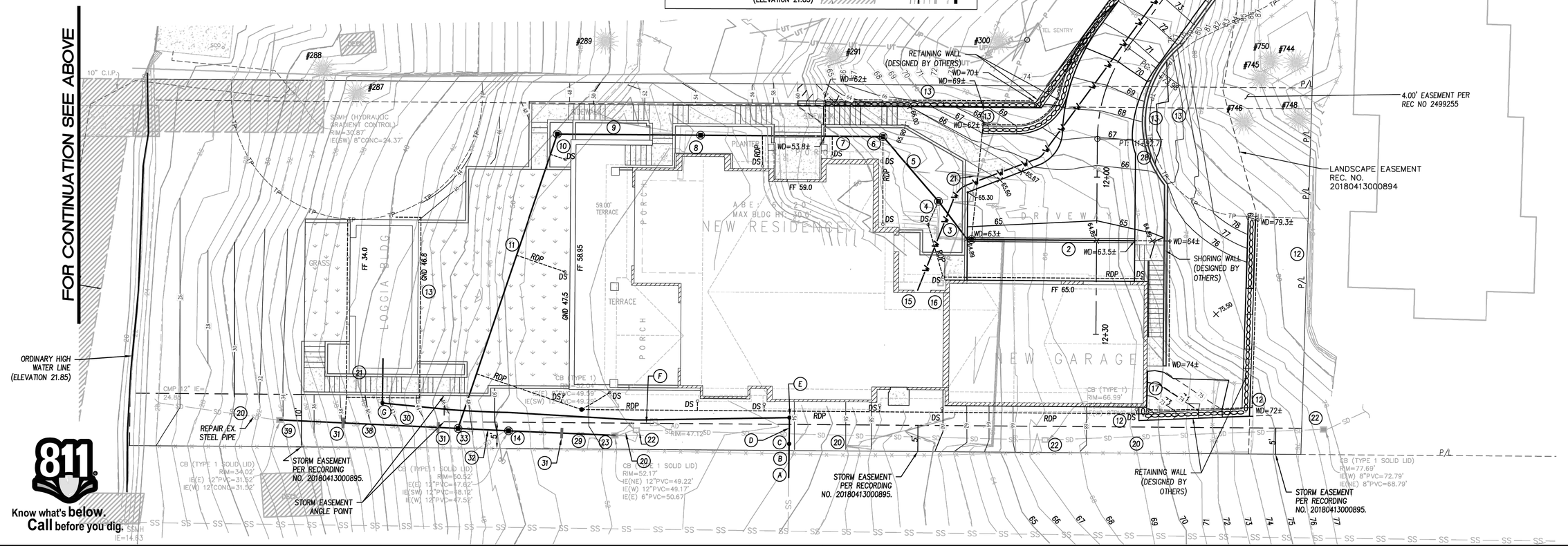

811 Know what's below. Call before you dig.

RF ARCHITECTURE
7421 214TH AVENUE EAST
BONNEY LAKE, WA 98391
253-359-4039

MURRAY RESIDENCE
4803 FOREST AVENUE SE
MERCER ISLAND, WA 98040

Apex Engineering PLLC
2601 South 35th St., Suite 200
Tacoma, Washington 98409-7499
(253) 472-4496 FAX (253) 472-2435

HELEN B. JACOBS — STATE OF WASHINGTON — 12241 — REGISTERED PROFESSIONAL ENGINEER

09-15-2023

SEPT. 15, 2023

SEC 13/24 T24N R04E

DRAINAGE AND UTILITIES

C3.0

APEX JOB NO. 34578

© APEX ENGINEERING LLC 2023

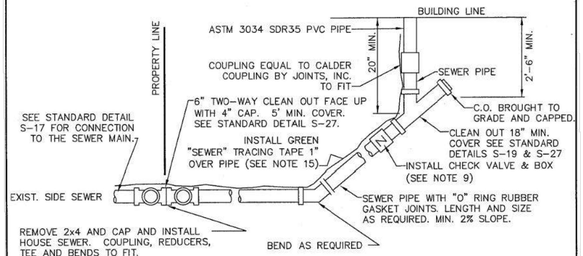

BUILDING CONNECTION

NOTES

1. ELBOWS SHALL NOT BE GREATER THAN 45 DEGREES.
2. CLEAN OUT IS REQUIRED FOR EACH PIPE LENGTH GREATER THAN 100' AND FOR EACH 90° ACCUMULATED ELBOW/100'.
3. ALL HOUSE PLUMBING OUTLETS MUST BE CONNECTED TO THE SEWER. NO DOWN SPOUTS OR STORM DRAINAGE MAY BE CONNECTED TO THE SEWER SYSTEM.
4. 18" MINIMUM COVERAGE OVER PIPE.
5. LAY PIPE IN STRAIGHT LINE BETWEEN BENDS. MAKE ALL CHANGES IN GRADE OR LINE WITH ⅛ BEND OR WYE. 90° CHANGE WITH 1/8 BEND AND WYE.
6. 4" SEWER PIPE MINIMUM SIZE ON PROPERTY. 2% MINIMUM GRADE.
7. ALL CONSTRUCTION SHALL BE IN ACCORDANCE WITH CURRENT SEWER ORDINANCES.
8. ALL CONSTRUCTION REQUIRES A PLAN SHOWING PROPERTY AND DIMENSIONS AND COMPLETION OF SIDE SEWER APPLICATION AND MAINTENANCE AGREEMENT, AS NEEDED.
9. BACK WATER VALVE (CHECK VALVE) IS REQUIRED:
   A. IF CONNECTED TO A SHARED SIDE SEWER.
   B. IF CONNECTION AT HOUSE IS LOWER THAN BOTH UPSTREAM AND DOWNSTREAM MANHOLE.
   C. SEE S-23 & S-24 FOR LAKE LINE REQUIREMENTS.
10. AS-BUILT DRAWING SHOWING LOCATION OF SIDE SEWER & ALL BENDS, C.O. ETC., IN RELATION TO THE HOUSE IS REQUIRED AFTER INSPECTION & INSTALLATION. SEE STANDARD DETAIL S-38 FOR A TYPICAL "AS BUILT".
11. THE MINIMUM PIPE SIZE FOR SIDE SEWERS SHALL BE:
    6" – WITHIN THE PUBLIC RIGHT-OF-WAY.
    4" – SINGLE FAMILY RESIDENCES.
    6" – 2 TO 6 SINGLE FAMILY RESIDENCES.
    6" – BUILDINGS OTHER THAN SINGLE FAMILY RESIDENCES.
12. UTILITY PIPE TRACER TAPE SHALL BE DETECTABLE BELOW GROUND SURFACE, COLOR CODED, WITH UTILITY NAME PRINTED ON TAPE. CONDUCTIVE WARNING TAPE REQUIRED OVER ALL WATER PIPE. TAPE SHALL BE MANUFACTURER'S STANDARD PERMANENT, BRIGHT-COLORED, CONTINUOUS PRINTED PLASTIC TAPE, ALUMINUM BACKED, INTENDED FOR DIRECT-BURIAL SERVICE. TAPE SHALL BE NOT LESS THAN 6" WIDE X 4 MILS THICK.

CITY OF MERCER ISLAND
STANDARD DETAILS
SEWER

HOUSE SEWER CONNECTION

REV DATE					APPROVED
		6-5-2009	NO SCALE		**S-18**

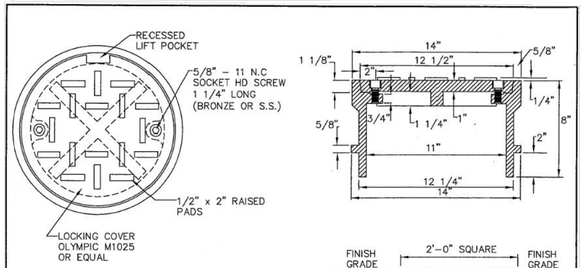

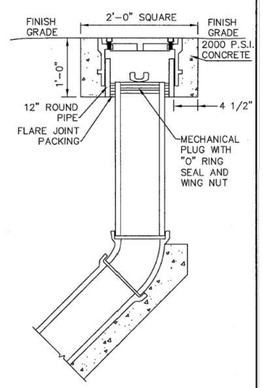

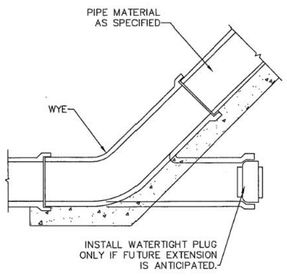

FOR PVC PIPE

NOTES

1. SEE S-27 FOR INSTALLATION DETAILS.

CITY OF MERCER ISLAND
STANDARD DETAILS
SEWER

CLEAN OUT DETAIL

REV DATE					APPROVED
		6-5-2009	NO SCALE		**S-19**

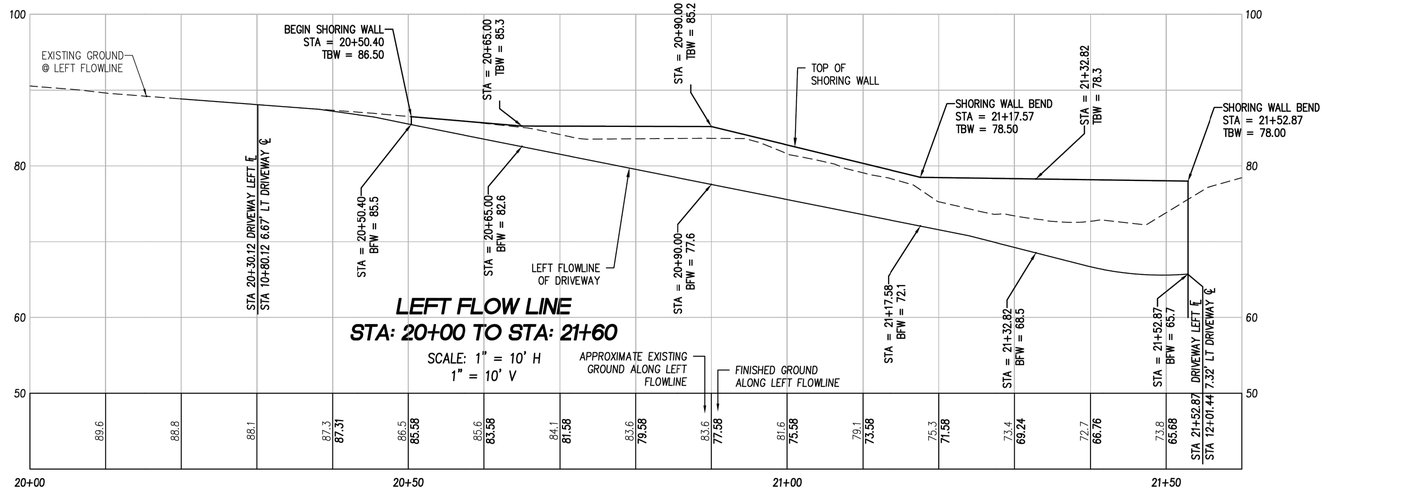

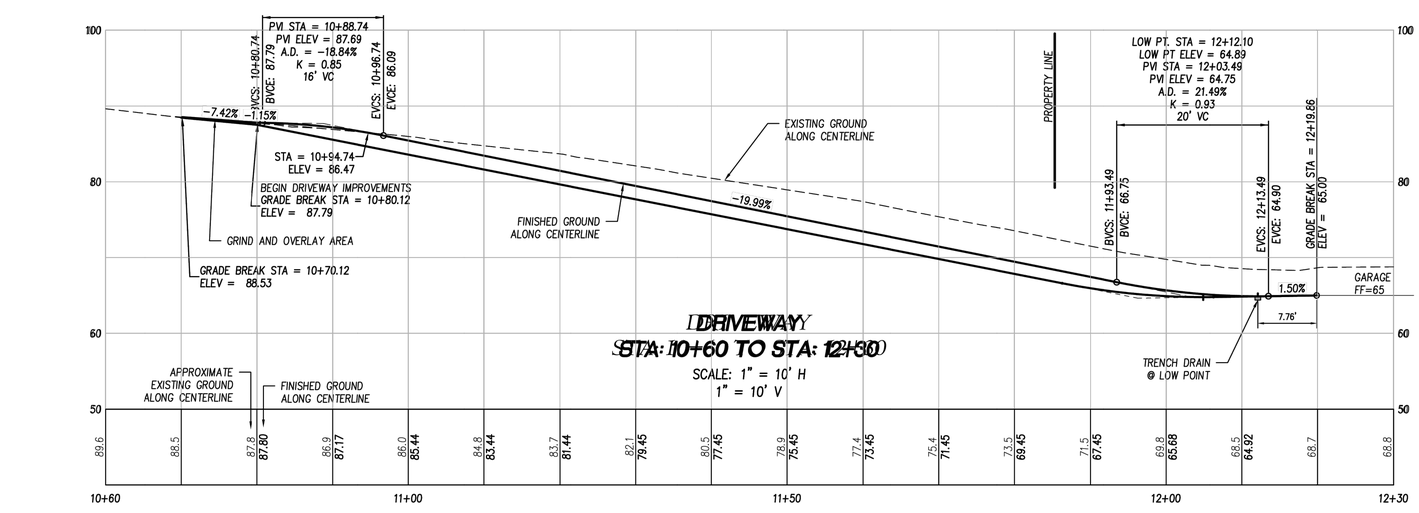

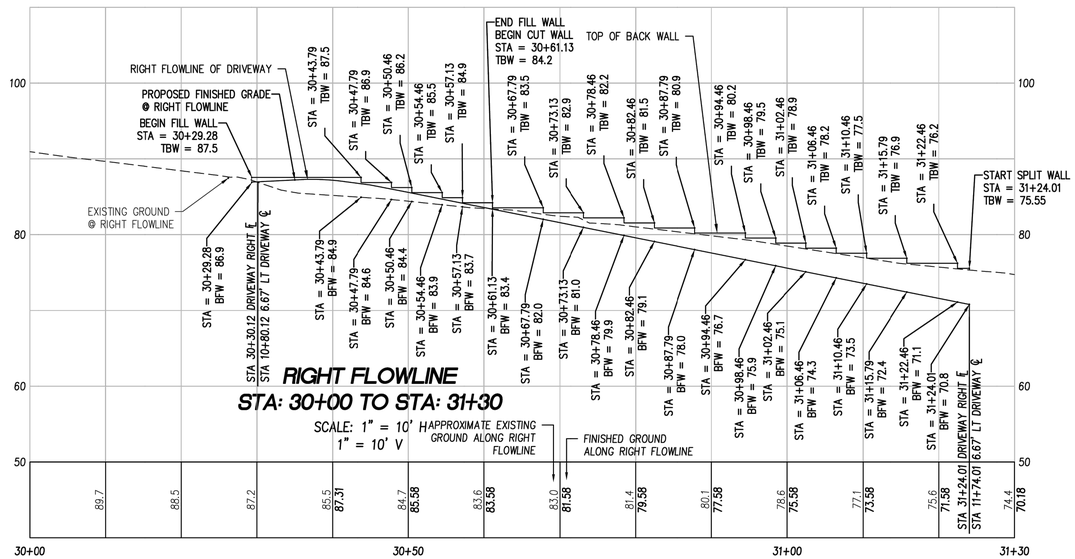

RF ARCHITECTURE
7421 214TH AVENUE EAST
BONNEY LAKE, WA 98391
253-359-4039

MURRAY RESIDENCE
4803 FOREST AVENUE SE
MERCER ISLAND, WA 98040

Apex Engineering PS
2601 South 35th St., Suite 200
Tacoma, Washington 98409-7699
(253) 474-3404 FAX: (253) 472-2699

BRIAN R. JACOBS
CERTIFICATE NUMBER
22248
REGISTERED
PROFESSIONAL ENGINEER

09-15-2023

SEPT. 15, 2023

SEC 13/24 T24N R04E

NOTES AND DETAILS

C3.1

APEX JOB NO. 34578

©APEX ENGINEERING LLC 2023

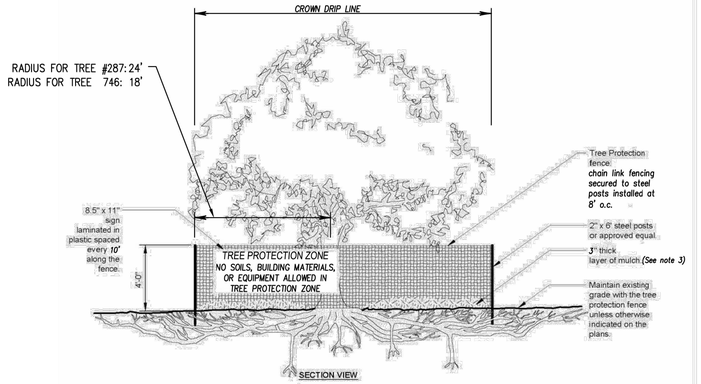

NOTES

1. *PROTECTIVE FENCING SHALL BE LOCATED WHERE SHOWN ON PLANS. AVOID DRIVING POSTS OR STAKING INTO MAJOR ROOTS. FENCE MUST REMAIN UP THROUGHOUT PROJECT.*
2. *NO STOCKPILING OF MATERIALS, GRADE CHANGES, VEHICULAR TRAFFIC, OR STORAGE OF EQUIPMENT OR MACHINERY SHALL BE ALLOWED WITHIN THE LIMIT OF THE FENCING. CONTACT ARBORIST FOR MITIGATION MEASURES IF FENCING MUST COME DOWN.*
3. *TREATMENT OF ROOTS EXPOSED DURING CONSTRUCTION: FOR ROOTS OVER 1" IN DIAMETER DAMAGED DURING CONSTRUCTION, MAKE A CLEAN STRAIGHT CUT TO REMOVE DAMAGED PORTION OF ROOT. ALL EXPOSED ROOTS SHALL BE TEMPORARILY COVERED WITH DAMP BURLAP WITH CONTINUOUS IRRIGATION, TO PREVENT DRYING. COVER WITH SOIL AS SOON AS POSSIBLE – 3" OF MOIST MULCH RECOMMENDED.*
4. *APPLY 3" OF ORGANIC MULCH OVER THE SURFACE INSIDE THE TREE PROTECTION AREA.*
5. *DURING THE DRY MONTHS OF JULY, AUGUST, AND SEPTEMBER, PROVIDE DEEP HYDRATION OF SOILS BY SPRINKLER OR DRIP IRRIGATION INSIDE THE TREE PROTECTION AREA.*
6. *AN ASSESSMENT OF THE ENCOUNTERED ROOTS SHOULD BE UNDERTAKEN T DETERMINE IF ANY OF THE RETAINED TREES INCUR ROOT IMPACTS AND THE EXTEND OF THE ROOT IMPACTS.*
7. *ALL EXPOSED ROOTS SHOULD BE COVERED WITH MOIST NATIVE SOIL OR A COMMERCIAL COMPOST OR MULCH PRODUCT, SUFFICIENT TO COVER THE FRESHLY CUT ROOTS.*
8. *THE REMOVAL OF SCHEDULED TREES SHOULD BE DONE IN TWO PHASES: REMOVAL OF THE TRUNK AND CROWN MATERIAL AND THEN REMOVAL OF STUMPS, AS NEEDED. IF A STUMP CAN BE RETAINED AND STILL PROVIDE FOR ADEQUATE CONSTRUCTION EXCAVATION, THAT STUMP SHOULD BE RETAINED.*
9. *REMOVAL OF STUMPS SHOULD BE DONE UNDER THE SUPERVISION OF A TREE PROFESSIONAL. ANY ROOTS ENCOUNTERED SHOULD BE CLEANLY CUT AS IF THEY WERE FROM A TREE TO BE RETAINED.*

TREE PROTECTION DETAIL

NTS

PIPE ANCHOR DETAIL

NTS

POST-CONSTRUCTION SOIL MANAGEMENT:

1. *RETAIN AND PROTECT NATIVE VEGETATION AND SOIL:*
   - 1.1. *IDENTIFY AREAS OF THE SITE THAT WILL NOT BE DISTURBED DURING CONSTRUCTION (CLEARED, GRADED, OR DRIVEN ON). FENCE THOSE AREAS TO PREVENT IMPACTS DURING CONSTRUCTION.*
2. *LOOSEN COMPACTED SUBSOIL (IF NEEDED) IN DISTURBED AREAS (COMPACTED BY CONSTRUCTION TRAFFIC):*
   - 2.1. *SCARIFY THE TOP 4 INCHES OF SUBSOIL*
   - 2.2. *USE A CAT-MOUNTED RIPPER, TRACTOR-MOUNTED DISC, OR TILLER TO MIX THE FIRST LIFT OF TOPSOIL INTO THE SUBSOIL*
   - 2.3. *USE THE EQUIPMENT LISTED ABOVE TO SCARIFY (TILL OR RIP) SOILS TO A DEPTH OF 12 INCHES BEFORE TILLING IN AT LEAST 8 INCHES OF COMPOST*
3. *RESTORE SOILS THAT ARE DISTURBED DURING CONSTRUCTION BY IMPLEMENTING ONE OF THE FOLLOWING:*
   - 3.1. *OPTION 1: TILL COMPOST (1.75 INCHES FOR TURF AREAS, 3 INCHES FOR PLANTING BEDS) INTO EXISTING SOIL*
   - 3.2. *OPTION 2: STOCKPILE AND REUSE EXISTING TOP SOIL (AMEND IF NEEDED TO MEET 5% ORGANIC MATTER CONTENT FOR TURF AREAS; 10% ORGANIC MATTER CONTENT FOR PLANTING BEDS)*
   - 3.3. *OPTION 3: IMPORT 6 INCHES OF COMPOST AMENDED TOPSOIL (25% COMPOST FOR TURF AREAS; 40% COMPOST FOR PLANTING BEDS) AND SCARIFY (TILL OR RIP) INTO EXISTING SOIL IN TWO 3-INCH LIFTS*
4. *ADD MULCH TO PLANTING BEDS:*
   - 4.1. *SPREAD MULCH (COARSE BARK OR WOOD CHIPS) IN THE SPRING OR FALL (AFTER PLANTING) TO CONTROL WEEDS, REDUCE THE NEED FOR IRRIGATION, AND PREVENT EROSION. APPLY 1 TO 2 INCHES OF MULCH ON PLANTING BEDS AND AROUND SHALLOW-ROOTED ANNUALS. APPLY 2 TO 4 INCHES OF MULCH AROUND TREES AND WOODY PERENNIALS, BUT MAKE SURE TO KEEP MULCH 2 TO 3 INCHES AWAY FROM TREE TRUNKS.*
5. *PROTECT RESTORED SOILS FROM EROSION AND RE-COMPACTION:*
   - 5.1. *PREVENT RUNOFF FROM ROADS OR OPEN SLOPES ONTO AMENDED SOIL AREAS. COMPOST BLANKETS ARE AN APPROVED EROSION CONTROL BEST MANAGEMENT PRACTICE (BMP) THAT CAN BE USED DURING CONSTRUCTION AND THEN TILLED INTO THE EXISTING SOIL AT THE END OF THE CONSTRUCTION PROCESS PRIOR TO PLANTING. ONCE SOILS HAVE BEEN AMENDED, VEHICLE TRAFFIC SHOULD BE PROHIBITED TO PREVENT RE-COMPACTION FROM OCCURRING.*

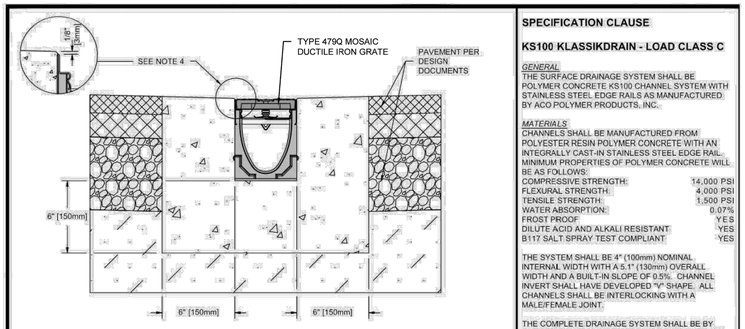

NOTES:
1. IT IS NECESSARY TO ENSURE MINIMUM DIMENSIONS SHOWN ARE SUITABLE FOR EXISTING GROUND CONDITIONS. *ENGINEERING ADVICE MAY BE REQUIRED.*
2. MINIMUM CONCRETE STRENGTH OF 4,000 PSI IS RECOMMENDED. CONCRETE SHOULD BE VIBRATED TO ELIMINATE AIR POCKETS.
3. EXPANSION AND CONTRACTION CONTROL JOINTS AND REINFORCEMENT ARE RECOMMENDED TO PROTECT CHANNEL AND CONCRETE SURROUND. *ENGINEERING ADVICE MAY BE REQUIRED.*
4. THE FINISHED LEVEL OF THE CONCRETE SURROUND MUST BE APPROX. 1/8" [3mm] ABOVE THE TOP OF THE CHANNEL EDGE.
5. CONCRETE BASE THICKNESS SHOULD MATCH SLAB THICKNESS. ENGINEERING ADVICE MAY BE REQUIRED TO DETERMINE PROPER LOAD CLASS.
6. REFER TO ACO'S LATEST INSTALLATION INSTRUCTIONS FOR FURTHER DETAILS.

SPECIFICATION CLAUSE

KS100 KLASSIKDRAIN - LOAD CLASS C

GENERAL
THE SURFACE DRAINAGE SYSTEM SHALL BE POLYMER CONCRETE KS100 CHANNEL SYSTEM WITH STAINLESS STEEL EDGE RAILS AS MANUFACTURED BY ACO POLYMER PRODUCTS, INC.

MATERIALS:
CHANNELS SHALL BE MANUFACTURED FROM POLYESTER RESIN POLYMER CONCRETE WITH AN INTEGRALLY CAST-IN STAINLESS STEEL EDGE RAIL. MINIMUM PROPERTIES OF POLYMER CONCRETE WILL BE AS FOLLOWS:

COMPRESSIVE STRENGTH:	14,000 PSI
FLEXURAL STRENGTH:	4,000 PSI
TENSILE STRENGTH:	1,500 PSI
WATER ABSORPTION:	0.07%
FROST PROOF:	YES
DILUTE ACID AND ALKALI RESISTANT:	YES
B117 SALT SPRAY TEST COMPLIANT:	YES

THE SYSTEM SHALL BE 4" (100mm) NOMINAL INTERNAL WIDTH WITH A 5.1" (130mm) OVERALL WIDTH AND A BUILT-IN SLOPE OF 0.5%. CHANNEL INVERT SHALL HAVE OPEN "V" SHAPE. ALL CHANNELS SHALL BE INTERLOCKING WITH A MALE/FEMALE JOINT.

THE COMPLETE DRAINAGE SYSTEM SHALL BE BY ACO POLYMER PRODUCTS, INC. ANY DEVIATION OR PARTIAL SYSTEM DESIGN AND/OR IMPROPER INSTALLATION WILL VOID ANY AND ALL WARRANTIES PROVIDED BY ACO POLYMER PRODUCTS, INC.

CHANNEL SHALL WITHSTAND LOADING TO PROPER LOAD CLASS AS OUTLINED BY EN 1433. GRATE TYPE SHALL BE APPROPRIATE TO MEET THE SYSTEM LOAD CLASS SPECIFIED AND INTENDED APPLICATION. GRATES SHALL BE SECURED USING 'QUICKLOK' BOLTLESS LOCKING SYSTEM. CHANNEL AND GRATE SHALL BE CERTIFIED TO MEET THE SPECIFIED EN 1433 LOAD CLASS. THE SYSTEM SHALL BE INSTALLED IN ACCORDANCE WITH THE MANUFACTURER'S INSTRUCTIONS AND RECOMMENDATIONS.

KS1-C-EAP DATE: 08/25/15	KS100 - KLASSIKDRAIN - LOAD CLASS: C Exposed Asphalt Pavement INSTALLATION DRAWING - ACO DRAIN	ACO Polymer Products, Inc. 825 W. Beechcraft St. Casa Grande, AZ 85122 Tel: 520-421-9988 Fax: 520-421-9899	9470 Pinecone Dr. Mentor, OH 44060 Tel: 440-639-7230 Fax: 440-639-7235	4211 Pheasant Rd. Fort Mill, SC 29708 Tel: 440-639-7230 Fax: 803-802-1063

Arizona Tel: 888-490-9552 e-mail: sales@acousa.com Ohio Tel: 800-543-4764 www.acousa.com South Carolina Tel: 800-543-4764

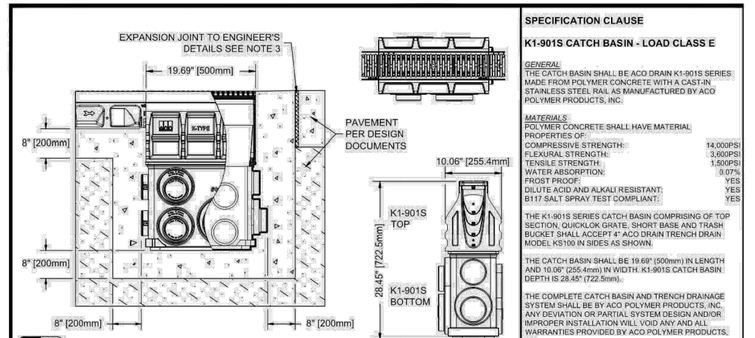

NOTES:
1. IT IS NECESSARY TO ENSURE THE MINIMUM DIMENSIONS SHOWN ARE SUITABLE FOR THE EXISTING GROUND CONDITIONS. *ENGINEERING ADVICE MAY BE REQUIRED.*
2. A MINIMUM CONCRETE STRENGTH OF 4,000 PSI IS RECOMMENDED. THE CONCRETE SHOULD BE VIBRATED TO ELIMINATE AIR POCKETS.
3. EXPANSION AND CRACK CONTROL JOINTS ARE RECOMMENDED TO PROTECT THE CATCH BASIN AND THE CONCRETE SURROUND. *ENGINEERING ADVICE MAY BE REQUIRED.*
4. THE FINISHED LEVEL OF THE CONCRETE SURROUND MUST BE APPROX. 1/8" ABOVE THE TOP OF THE CATCH BASIN EDGE.
5. REFER TO ACO'S LATEST INSTALLATION INSTRUCTIONS FOR FURTHER DETAILS.
6. CONCRETE BASE THICKNESS SHOULD MATCH THE SLAB THICKNESS.
7. REBAR OR STEEL MESH REINFORCEMENT MAY BE REQUIRED. *ENGINEERING ADVICE MAY BE REQUIRED.*

SPECIFICATION CLAUSE

K1-901S CATCH BASIN - LOAD CLASS E

GENERAL
THE CATCH BASIN SHALL BE ACO DRAIN K1-901S SERIES MADE FROM POLYMER CONCRETE WITH A CAST-IN STAINLESS STEEL RAIL AS MANUFACTURED BY ACO POLYMER PRODUCTS, INC.

MATERIALS
POLYMER CONCRETE SHALL HAVE MATERIAL PROPERTIES OF:

COMPRESSIVE STRENGTH:	14,000PSI
FLEXURAL STRENGTH:	3,600PSI
TENSILE STRENGTH:	1,500PSI
WATER ABSORPTION:	0.07%
FROST PROOF:	YES
DILUTE ACID AND ALKALI RESISTANT:	YES
B117 SALT SPRAY TEST COMPLIANT:	YES

THE K1-901S SERIES CATCH BASIN COMPRISING OF TOP SECTION, QUICKLOK GRATE, SHORT BASE AND TRASH BUCKET SHALL ACCEPT 4" ACO DRAIN TRENCH DRAIN MODEL KS100 IN SIDES AS SHOWN.

THE CATCH BASIN SHALL BE 19.69" (500mm) IN LENGTH AND 10.06" (255.4mm) IN WIDTH. K1-901S CATCH BASIN DEPTH IS 28.45" (722.5mm).

THE COMPLETE CATCH BASIN AND TRENCH DRAINAGE SYSTEM SHALL BE BY ACO POLYMER PRODUCTS, INC. ANY DEVIATION OR PARTIAL SYSTEM DESIGN AND/OR IMPROPER INSTALLATION WILL VOID ANY AND ALL WARRANTIES PROVIDED BY ACO POLYMER PRODUCTS, INC.

K1-901S SERIES CATCH BASIN SHALL WITHSTAND LOADING TO PROPER LOAD CLASS AS OUTLINED BY EN 1433. GRATE SHALL BE HELD IN PLACE WITH THE QUICKLOK SYSTEM. CATCH BASIN, TRENCH CHANNEL AND GRATE SHALL BE INDEPENDENTLY CERTIFIED TO MEET THE SPECIFIED EN 1433 LOAD CLASS.

THE SYSTEM SHALL BE INSTALLED IN ACCORDANCE WITH THE MANUFACTURER'S INSTRUCTIONS AND RECOMMENDATIONS.

K1901S-E-ECP DATE: 08/24/15	K1-901S CATCH BASIN - LOAD CLASS: E Exposed Concrete Pavement INSTALLATION DRAWING - ACO DRAIN	ACO Polymer Products, Inc. 825 W. Beechcraft St. Casa Grande, AZ 85122 Tel: 520-421-9988 Fax: 520-421-9899	9470 Pinecone Dr. Mentor, OH 44060 Tel: 440-639-7230 Fax: 440-639-7235	4211 Pheasant Rd. Fort Mill, SC 29708 Tel: 440-639-7230 Fax: 803-802-1063

Arizona Tel: 888-490-9552 e-mail: sales@acousa.com Ohio Tel: 800-543-4764 www.acousa.com South Carolina Tel: 800-543-4764

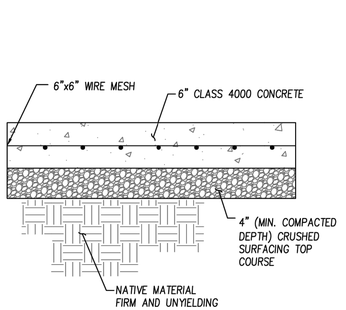

DRIVEWAY PAVEMENT SECTION

NO SCALE

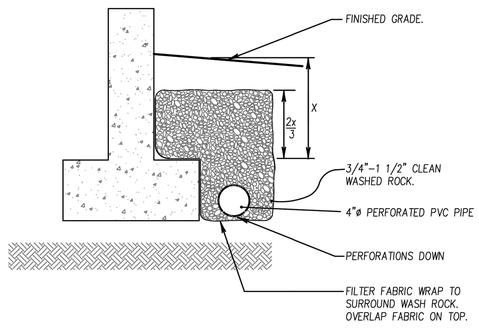

FOOTING DRAIN DETAIL

NO SCALE

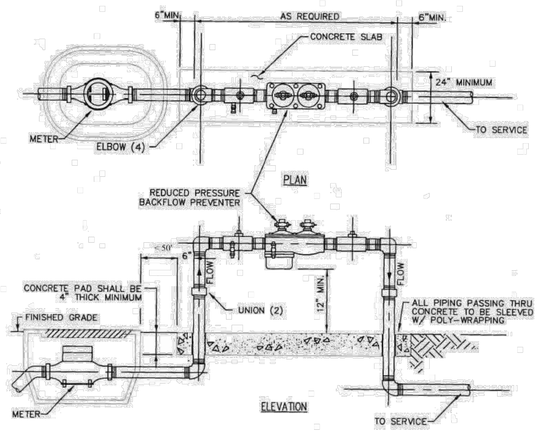

RPBA DETAIL

NTS

NOTES:

1. *A WATER SUPPLY PERMIT IS REQUIRED FOR THE INSTALLATION OF THE REDUCED PRESSURE BACKFLOW ASSEMBLY (RPBA). IF THE RPBA IS LOCATED IN THE R/W, A RIGHT-OF-WAY USE PERMIT WILL BE NEEDED. CONTRACTOR TO COORDINATE AND CONFIRM THE PROPOSED LOCATION WITH THE CITY OF MERCER ISLAND CROSS CONNECTION CONTROL SPECIALIST FOR APPROVAL.*
2. *THE RPBA MUST BE LISTED ON THE WASHINGTON STATE DEPARTMENT OF HEALTH APPROVAL LIST AND INSTALLED IN THE APPROVED ORIENTATION. CONTRACTOR TO COORDINATE AND CONFIRM WITH THE CITY OF MERCER ISLAND CROSS CONNECTION CONTROL SPECIALIST FOR APPROVAL OF THE PROPOSED RPBA AND PROPER INSTALLATION ORIENTATION.*
3. *A WASHINGTON STATE CERTIFIED BACKFLOW ASSEMBLY TESTER MUST TEST THE RPBA AFTER INSTALLATION. CONTRACTOR TO COORDINATE WITH THE CITY OF MERCER ISLAND CROSS CONNECTION CONTROL SPECIALIST FOR A LIST OF APPROVED TESTERS.*
4. *THE RPBA MUST BE WITHIN 50' OF THE WATER METER.*
5. *THE RPBA MUST BE INSTALLED 12" ABOVE FLOOD GRADE AND NOT BE SUBJECT TO FLOODING.*
6. *FREEZE PROTECTION TO BE PROVIDED WITH AN INSULATED FIBERGLASS ENCLOSURE ON A CONCRETE PAD.*
7. *AN AS-BUILT DRAWING AND INSPECTION ARE REQUIRED PRIOR TO BACKFILL.*

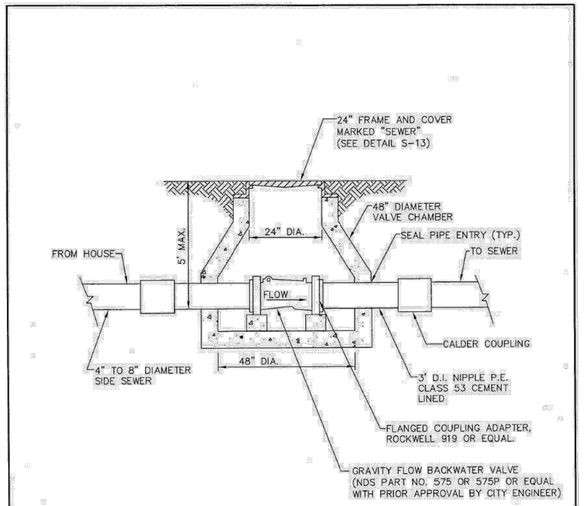

CITY OF MERCER ISLAND
STANDARD DETAILS
SEWER
BACK WATER VALVE ASSEMBLY FOR JOINT USE SIDE SEWER (4" OR 6" DIAMETER)

6-5-2009	NO SCALE	S-26

REV: DATE | APPROVED | 1

RF ARCHITECTURE
7421 214TH AVENUE EAST
BONNEY LAKE, WA 98391
253-359-4039

MURRAY RESIDENCE
4803 FOREST AVENUE SE
MERCER ISLAND, WA 98040

Apex Engineering PS
2601 South 35th St., Suite 200
Tacoma, Washington 98409-7479
(253) 472-4464 FAX: (253) 472-2599

09-15-2023

SEPT. 15, 2023

SEC 13/24 T24N R04E

NOTES AND DETAILS

C3.2

APEX JOB NO. 34578

© APEX ENGINEERING LLC 2023

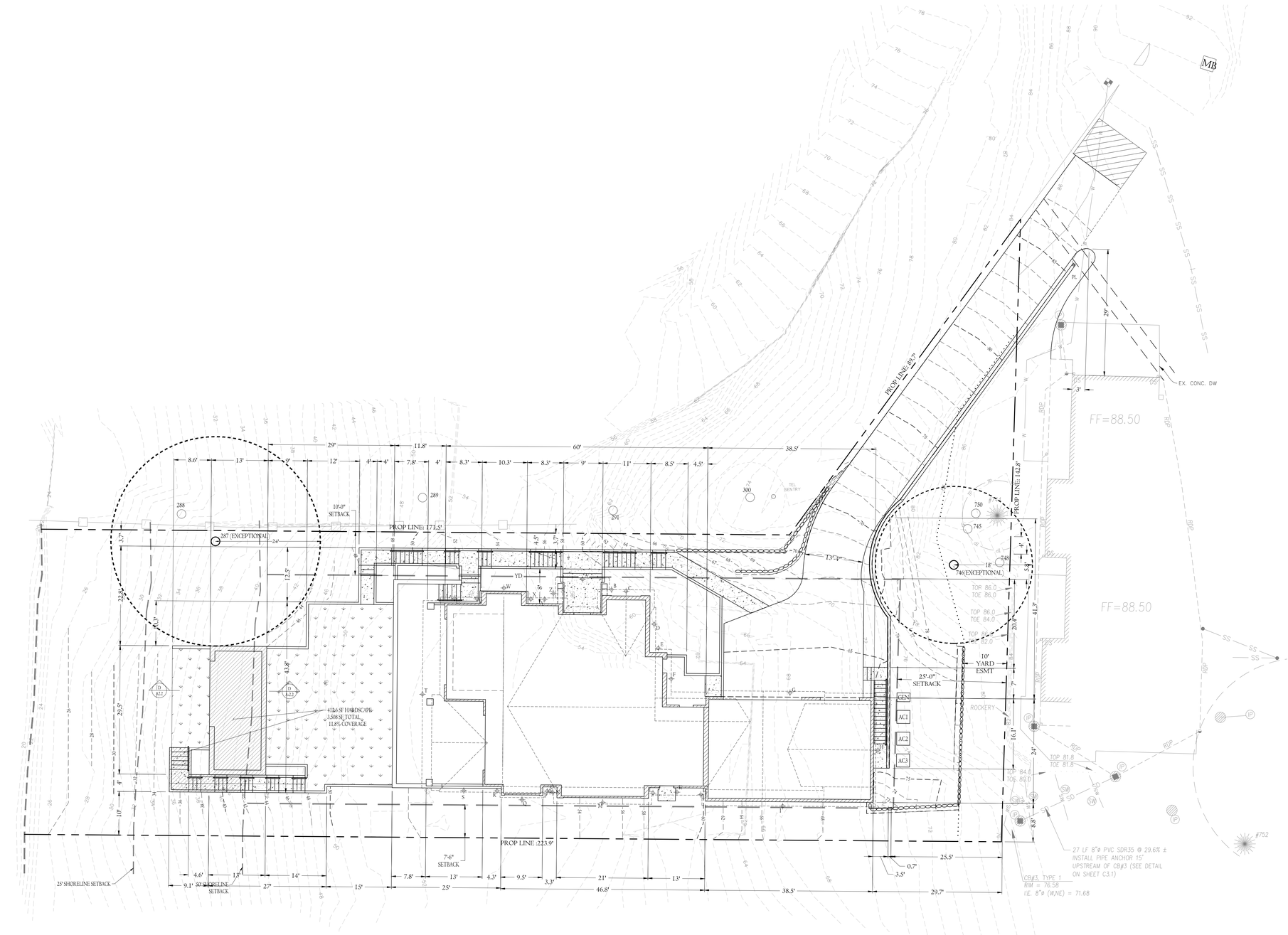

NORTH

SITE PLAN DIMENSIONED

1" = 10.0'

0 5' 10' 20'

SCALE: 1" = 10'

ABE (MIDPOINT ELEV.)

A:	59.7	N:	54.5
B:	60.2	O:	54.4
C:	59.7	P:	54.3
D:	61.5	Q:	54.0
E:	61.5	R:	53.8
F:	60.5	S:	53.3
G:	68.9	T:	53.0
H:	70.8	U:	52.7
I:	67.4	V:	52.8
J:	60.5	W:	53.3
K:	59.4	X:	54.0
L:	52.7	Y:	54.5
M:	55.6	Z:	55.7

ABE (SEGMENT LENGTH)

a:	11	n:	3
b:	2	o:	3
c:	10	p:	2
d:	13	q:	9
e:	4	r:	2
f:	10	s:	17
g:	48	t:	42
h:	26	u:	12
i:	38	v:	2
j:	3	w:	10
k:	13	x:	2
l:	3	y:	7
m:	21	z:	5

TOTAL = 318'
19213.2/318= 60.41

RF ARCHITECTURE
PH: (253)359-4039
RICHARD@RFARCHITECTURE.COM
7421 214TH AVE E BONNEYLAKE, WA 98391

6080 REGISTERED ARCHITECT RICHARD W. FLAKE STATE OF WASHINGTON

All drawings, specifications, plans, ideas, arrangements, and designs represented or referred to are the property of and owned by Richard Flake Architect as whether the project for which they are made is executed or not. They were created, evolved, developed and produced for sole use on and in connection with this project and none of the above may be disclosed or given to or used by any person, firm, or corporation for any use or purpose whatsoever including any other project, except upon written permission of Richard Flake Architect.

Copyright 2023
Richard Flake Architect

MURRAY RESIDENCE

NEW SINGLE FAMILY RESIDENCE
9804 E MERCER ISLAND, WAY

DESIGN: RWF
DRAWN: HAVILAND CONSULTING
CHECKED: RWF

REVISIONS:

1 PER CITY REVIEW 10.22.2021

REVISIONS

2 PER CITY REVIEW 3.8.2023

REVISIONS

September 15, 2023

A-I.0

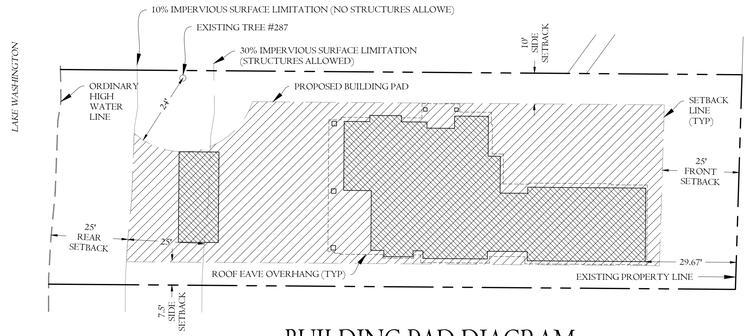

1 BUILDING PAD DIAGRAM

SCALE: 1" = 20'-0"

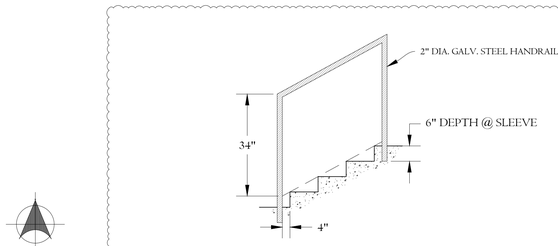

3 SIDEWALK RAILING DETAIL

NTS

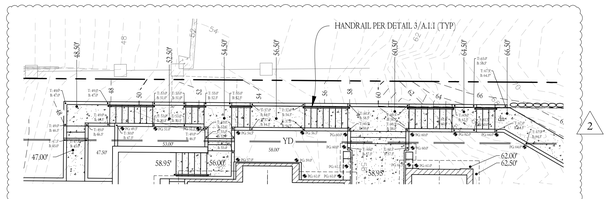

2 SIDEWALK DETAIL

SCALE: 1" = 10'-0"

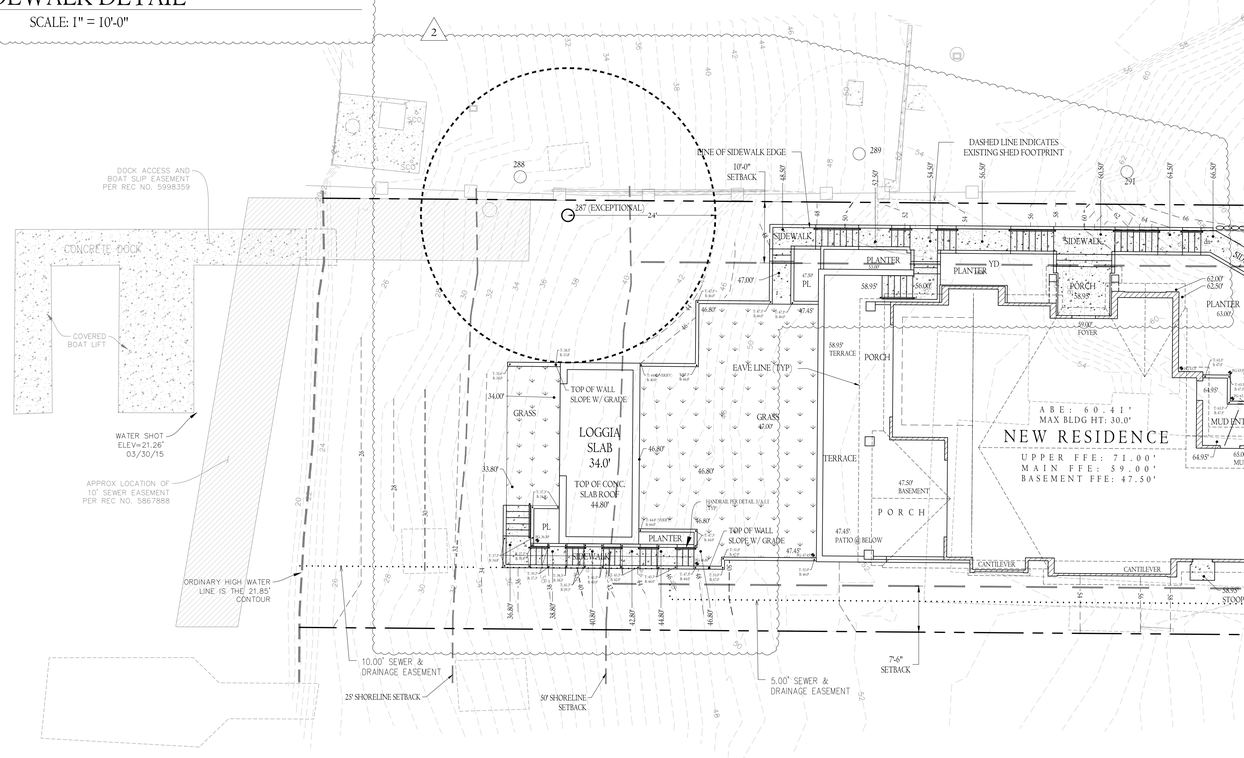

NORTH

SITE PLAN

1" = 10.0'

0 5' 10' 20'

SCALE: 1" = 10'

NOTE:
IF THERE IS AT LEAST 2 FEET OF SOIL, PLANTERS DO NOT COUNT TOWARDS HARDSCAPE, JUST THE EXTERIOR RETAINING WALLS COUNT TOWARDS HARDSCAPE.

NOTE:
PER ARBORIST REPORT, DATED SEPTEMBER 20, 2022, SITE EXCAVATION TO BE MONITORED BY A TREE PROFESSIONAL, AS EXCAVATION APPROACHES THE TREE PROTECTION ZONES, TREE ROOTS ORIGINATING FROM TREES SLATED FOR RETENTION MAY BE EXPOSED. ROOTS THAT WILL LIKELY BE EXPOSED MAY NEED TO BE SEVERED OR REMOVED, WHICH COULD RESULT IN AN INCREASED LIKELIHOOD OF AN ASSOCIATED FAILURE SOMETIME IN THE FUTURE. FAILURE TO MONITOR THESE ROOT SYSTEM ENCOUNTERS MIGHT RESULT IN OVERLOOKING A POTENTIALLY SIGNIFICANT FUTURE RISK.

BUILDING HEIGHT

HIGHEST ELEVATION POINT ON LOT:	85.2'
LOWEST ELEVATION POINT ON LOT:	21.85'
ELEVATION DIFFERENCE:	63.35'
HORIZONTAL DISTANCE BETWEEN POINTS:	268'
LOT SLOPE:	23.6%

GROSS FLOOR AREA

UPPER FLOOR:	2,369'
MAIN FLOOR:	2,639'
GROSS BASEMENT:	2,851'
GARAGE:	924'
TOTAL FLOOR AREA:	8,783'
ACCESSORY DWELLING UNIT:	804'
DECKS:	325'
TOTAL BUILDING AREA:	10,302'
LOT AREA:	17,634
ZONE:	R-15
ALLOWED GROSS FLOOR AREA:	7,053.6 SF (40% OF LOT)
PROPOSED FLOOR AREA:	6,818 SF (38.7% OF LOT)

LOT COVERAGE

GROSS LOT AREA:	17,634 SF
NET LOT AREA:	17,634 SF
ALLOWED LOT COVERAGE AREA:	6,172 SF
ALLOWED LOT COVERAGE:	35% OF LOT
EXISTING LOT COVERAGE:	
1. MAIN STRUCTURE ROOF AREA:	1,494 SF
2. ACCESSORY BLDG ROOF AREA:	80 SF
3. VEHICULAR USE:	1,945 SF
4. COV'D PATIOS/DECKS:	234 SF
5. TOTAL EXISTING LOT COVERAGE:	3,753 SF
TOTAL EXISTING LOT AREA REMOVED:	3,753 SF
PROPOSED ADJUSTMENTS FOR FLAG LOT:	309 SF
TOTAL NEW LOT COVERAGE:	
1. MAIN STRUCTURE ROOF AREA:	3,114 SF
2. ACCESSORY STRUCTURE ROOF AREA:	390 SF
3. VEHICULAR USE:	1,833 SF
4. COV'D PATIOS/DECKS:	815 SF
5. TOTAL NEW LOT COVERAGE:	6,152 SF
TOTAL PROJECT LOT COVERAGE AREA:	6,152 SF
PROPOSED LOT COVERAGE AREA:	34.88%

HARDSCAPE

GROSS LOT AREA:	17,634 SF
NET LOT AREA:	17,634 SF
AREA BORROWED FROM LOT COVERAGE:	0 SF
ALLOWED HARDSCAPE AREA:	9% OF LOT
ALLOWED HARDSCAPE AREA:	1,587 SF
TOTAL EXISTING HARDSCAPE AREA:	
1. UNCOVERED DECKS:	734 SF
2. UNCOVERED PATIOS:	405 SF
3. WALKWAYS:	116 SF
4. STAIRS:	129 SF
5. ROCKERIES/RETAINING WALLS:	66 SF
6. TOTAL EXISTING HARDSCAPE AREA:	1,450 SF
TOTAL HARDSCAPE AREA REMOVED:	1,450 SF
TOTAL NEW HARDSCAPE AREA:	
1. UNCOVERED DECKS:	452 SF
2. UNCOVERED PATIOS:	61 SF
3. WALKWAYS:	528 SF
4. STAIRS:	245 SF
5. ROCKERIES/RETAINING WALLS:	80 SF
6. TOTAL NEW HARDSCAPE AREA:	1,366 SF
TOTAL PROJECT HARDSCAPE AREA:	1,366 SF
TOTAL PROJECT HARDSCAPE AREA:	7.7%

RF ARCHITECTURE
PH: (253)359-4039
RICHARD@RFARCHITECTURE.COM
7421 214TH AVE E BONNEYLAKE, WA 98391

6080 REGISTERED ARCHITECT RICHARD W. FLAKE STATE OF WASHINGTON

All drawings, specifications, plans, ideas, arrangements, and designs represented or referred to are the property of and owned by Richard Flake Architect no whether the project for which they are made is executed or not. They were created, evolved, developed and produced for sole use on and in connection with this project and none of the above may be disclosed or given to or used by any person, firm, or corporation for any use or purpose whatsoever including any other project, except upon written permission of Richard Flake Architect.

Copyright 2023
Richard Flake Architect

MURRAY RESIDENCE

NEW SINGLE FAMILY RESIDENCE
9804 MERCER ISLAND, WA 98040

DESIGN: RWF
DRAWN: HAVILAND CONSULTING
CHECKED: RWF
REVISIONS:
1 PER CITY REVIEW 10.22.2023
REVISIONS
2 PER CITY REVIEW 3.8.2023
REVISIONS

September 15, 2023

1 A-1.1

Name: Murray
project 4803 Forest
Ave SE

Assessment date: June 2019
Revised: December 15, 2020

Thomas QuigleyName: Murray project ISA certified arborist
PN0655A4803 Forest Ave SE

	Species	DBH"	Drpln rad'	Cndtn	Remarks	Designation	Rm	RTN	Mitigation
	On-site Trees								
287	Acer macrophyllum, Big leaf maple	34"	24' south	Good	Tree root collar is located 4-5' below existing/proposed grade	Exceptional		X	
290	Calocedrus decurrens. Incense cedar	16"	10' radius	Excellent	To be removed	Large	X		2
292	Acer macrophyllum, Big leaf maple	11"	12' south	Fair	Located 5' from BLM stump with Kretzmaria fungii. Leans 5% south.	Large	X		2
293	Acer macrophyllum, Big leaf maple	7"	5' south, 0' north	Good	4", 2", 5" equlas 6.7" DBH. Shared canopy. Leans 5% south	Non-reg			Non-reg
294	Acer macrophyllum, Big leaf maple	13"	18' south	Fair	Tree leans south so canopy is unusually heavy to the south.	Large	X		2
295	Acer macrophyllum, Big leaf maple	17"	0' south	Good	Shared canopy with other more dominant trees.	Large	X		2
296	Acer macrophyllum, Big leaf maple	15"	8' south	Fair	Dead stem and limbs, low vigor	Large	X		2
297	Acer macrophyllum, Big leaf maple	9"	18' south	Good	To be removed	Non-reg			Non-reg
298	Acer macrophyllum, Big leaf maple	12.5"	18' south	Good	no canopy coverage to the north, to be removed	Large	X		2
744	Acer macrophyllum, Big leaf maple	19"	15'	Excellent	Out of proposed construction area, tree protection from nearby, off-site construction	Large		X	
745	Thuja plicata, Western red cedar	19", 11"	15' south	Fair	Out of proposed construction area.	Large		X	
746	Acer macrophyllum, Big leaf maple	36"+	18' SW	Fair	Decay column. Out of proposed construction area.	Exceptional		X	
748	Acer macrophyllum, Big leaf maple	22"	0' north 20' south	Fair	Out of proposed construction area.	Large		X	
750	Prunus, plum?	7"	6'	Fair	under canopy of nearby Tree 744	Non-reg			Non-reg
751	Acer macrophyllum, Big leaf maple	36"+	' south 15' w	Fair	Canopy slightly overhangs construction area below. Decay, deadwood.	Exceptional	X		6
					Total tree onsite = 15, 3 Non-regulated. 30% of 12 is 3.6 or 4 trees. 5 trees retained.	**Total Replant**			**18**
	Off-site Trees								

Name: Murray
project 4803 Forest
Ave SE

Assessment date: June 2019
Revised: December 15, 2020

Thomas QuigleyName: Murray project ISA certified arborist
PN0655A4803 Forest Ave SE

	Species	DBH"	Drpln rad'	Cndtn	Remarks	Designation	Rm	RTN	Mitigation
288	Acer macrophyllum, Big leaf maple	est 48" +	6' south	Good	Off-site tree with canopy dominated by Tree #287	Exceptional		X	
289	Acer macrophyllum, Big leaf maple	est 30"	15' radius	Good	Off-site tree with hornet nest in ground at root collar.	Exceptional		X	
291	Acer macrophyllum, Big leaf maple	2 x 18"	5' south	Fair	Was 3-stem, center stem cut at 10', deadwood, narrow.	Exceptional		X	
299	Acer macrophyllum, Big leaf maple	21"	3' south	Fair	Off-site tree, large decay column, good response growth.	Large	X		
300	Acer macrophyllum, Big leaf maple	15", 20.5"	8' south	Fair	Off-site, located just 8' from power pole with transformer.	Large		X	

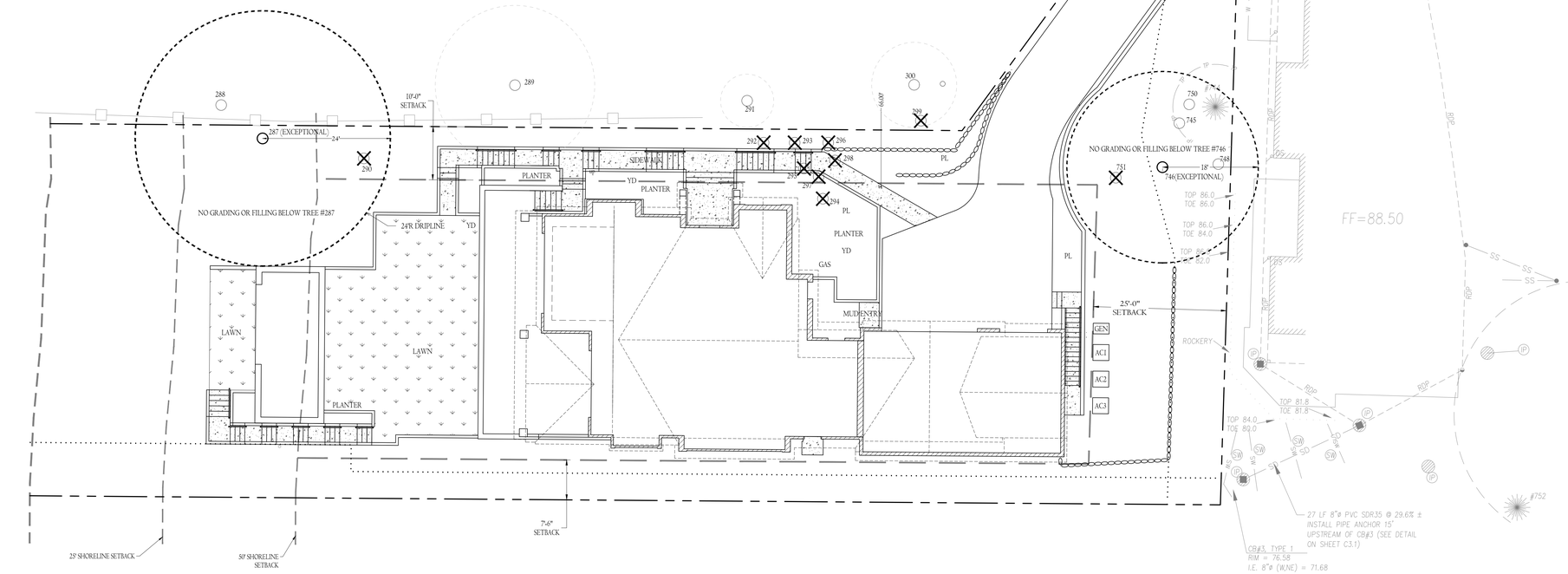

NOTE:
PER ARBORIST REPORT, DATED SEPTEMBER 20, 2022, SITE EXCAVATION TO BE MONITORED BY A TREE PROFESSIONAL AS EXCAVATION APPROACHES THE TREE PROTECTION ZONES. TREE ROOTS ORIGINATING FROM TREES SLATED FOR RETENTION MAY BE EXPOSED. ROOTS THAT WILL LIKELY BE EXPOSED MAY NEED TO BE SEVERED OR REMOVED, WHICH COULD RESULT IN AN INCREASED LIKELIHOOD OF AN ASSOCIATED FAILURE SOMETIME IN THE FUTURE. FAILURE TO MONITOR THESE ROOT SYSTEM ENCOUNTERS MIGHT RESULT IN OVERLOOKING A POTENTIALLY SIGNIFICANT FUTURE RISK.

NOTE: COORDINATE WITH SHEET LA-1.0

NORTH

TREE PLAN

1" = 10.0'

0 5' 10' 20'

SCALE: 1" = 10'

RF ARCHITECTURE
PH: (253)359-4039
RICHARD@RFARCHITECTURE.COM
7421 214TH AVE E BONNEYLAKE, WA 98391

6080
REGISTERED ARCHITECT
RICHARD W. FLAKE
STATE OF WASHINGTON

All drawings, specifications, plans, ideas, arrangements, and designs represented or referred to are the property of and owned by Richard Flake Architect in whether the project for which they are made is executed or not. They were created, evolved, developed and produced for sole use on and in connection with this project and none of the above may be disclosed or given to or used by any person, firm, or corporation for any use or purpose whatsoever including any other project, except upon written permission of Richard Flake Architect.

Copyright 2023
Richard Flake Architect

RESIDENCE

MURRAY RESIDENCE
NEW SINGLE FAMILY RESIDENCE
4803 FOREST AVE SE
MERCER ISLAND, WA 98040

DESIGN: RWF
DRAWN:
HAVILAND CONSULTING
CHECKED: RWF
REVISIONS:
1 PER CITY REVIEW 10-22-2021 REVISIONS
2 PER CITY REVIEW 8-8-2023 REVISIONS

September 15, 2023

A-I.2

CITY OF MERCER ISLAND

COMMUNITY PLANNING & DEVELOPMENT
9611 SE 36TH STREET | MERCER ISLAND, WA 98040
PHONE: 206.275.7605 | www.mercergov.org
Inspection Requests: Online: www.mybuildingpermit.com VM: 206.275.7730

SITE DEVELOPMENT INFORMATION

Worksheet for single family residential development

PROJECT INFORMATION

Permit Number:	2012-069	Parcel Number:	257730-0021
Site Address:	4803 Forrest Ave SE	Phone Number:	(253)359-4039
Owner Name:	Ross Murray	Date:	4-24-23

Signature & phone number of Individual who completed this worksheet:

R Flake — (253)359-4039
Signature — Phone Number

GENERAL INFORMATION

Will any large trees be removed as a result of this development activity? Yes ☒ No ☐ Tree # 751
Large tree- trees with diameter of greater than or equal to 10 inches.

Do you have an Accessory Dwelling Unit? New ADU ☒ Existing ADU ☐ No ☐

Will you be adding air conditioning to the proposed development? Yes ☒ No ☐

What is the total square footage of all proposed decks (covered and uncovered)on the property? 886 Square Feet

This is a worksheet and is not a substitute for the Mercer Island Development Regulations. Please consult the Mercer Island City Code. The City may require additional information to be supplies to document compliance with regulations.

LOT SLOPE

According to the Mercer Island City Code, slope is a measurement of the average incline of the lot or other piece of land calculated by subtracting the lowest elevation of the property from the highest elevation and dividing the resulting number by the shortest horizontal distance between these two points. The resulting product is multiplied by 100.

LOT SLOPE CALCULATIONS

Highest Elevation Point of Lot:	85.2	Feet
Lowest Elevation Point of Lot:	21.85	Feet
Elevation Difference:	63.35	Feet
Horizontal Distance Between High and Low Points:	268	Feet
Lot Slope*	23.6	%

**Lot slope is the elevation difference divided by horizontal distance multiplied by 100.*

Lot slope calculations shown on Sheet # A-1.1

LOT COVERAGE

For single family residential development, "lot coverage" is the area of a lot that may be covered by a combination of the buildings and vehicular driving surfaces. Lot coverage is based on "net lot area". Net lot area is the size of the lot minus the area within any access easements on the property that do not provide access to the home on the subject lot. The maximum lot coverage for a specific lot is based upon the lots slope (see above). The area of the lot that cannot be used for lot coverage is "required landscaping area"; the landscaping area is typically improved with either hardscape (see below) or softscape.
***Please note:** Lot coverage is not the same as impervious surface calculations used for drainage review.*

Lot Slope	Maximum Lot Coverage (House, driving surfaces, and accessory buildings)	Required Landscaping Area
Less than 15%	40%	60%
15% to less than 30%	35%	65%
30% to 50%	30%	70%
Greater than 50% slope	20%	80%

ADJUSTMENTS

A one-time reduction in the required landscaping area and an increase in the allowed maximum lot coverage is allowed if:

A. The total reduction in required landscaping area shall not exceed 5%, and the total increase in maximum lot coverage shall not exceed 5%; and
B. The reduction in required landscaping area is associated with:
   1. A development proposal that will result in a single-story dwelling with wheelchair accessible entry, and may also include a single-story accessory building; or
   2. A development proposal on a flag lot that, after optimizing driveway routing and minimizing driveway width, requires a driveway that is more than the 25% of the allowed lot coverage. The allowed reduction in the required landscaping area and increase in the maximum lot coverage shall not exceed 5% or the area of the driveway in excess of 25% of the lot coverage, whichever is less. For example, a development proposal with a driveway that occupies 27% of the allowed lot coverage, may increase the total lot coverage by 2%
C. A recorded notice on title, covenant, easement, or other documentation in a form approved by the city, shall be required. The notice on title or other documentation shall describe the basis for the reduced landscaping area an increase in lot coverage.

Does this project include a proposed adjustment? Yes ☐ No ☐

LOT COVERAGE CALCULATIONS

A.	Gross Lot Area	17,634	Square Feet
B.	Net Lot Area	17,634	Square Feet
C.	Allowed Lot Coverage Area	6,172	Square Feet
D.	Allowed Lot Coverage	35	% of Lot
E.	Existing Lot Coverage:		
	1. Main Structure Roof Area	1,494	Square Feet
	2. Accessory Building Roof Area	80	Square Feet
	3. Vehicular Use (driveway, paved access easements [portion used by the lot for access], parking	1,945	Square Feet
	4. Covered Patios and Covered Decks	234	Square Feet

	5. Total Existing Lot Coverage Area (E1+E2+E3+E4)	3,753	Square Feet
F.	(Total Lot Coverage Area Removed)	3,753	Square Feet
G.	Proposed Adjustment for Single Story (Area)		Square Feet
H.	Proposed Adjustment for Flag Lot	309	Square Feet
I.	Total New Lot Coverage Area:		
	1. Main Structure Roof Area	3,114	Square Feet
	2. Accessory Structure Roof Area	390	Square Feet
	3. Vehicular Use (driveway, paved access easement [portion used by the lot for access], parking)	1,833	Square Feet
	4. Covered Patios and Covered Decks	815	Square Feet
	5. Total New Lot Coverage Area (I1 + I2 + I3 + I4)	6,152	
J.	Total Project Lot Coverage Area = (E5 - F) + I5	6,152	Square Feet
K.	Proposed Lot Coverage Area = (J/B) x 100	34.88	% of Lot

Lot coverage calculations shown on Plan Sheet # A-1.1

HARDSCAPE

Up to 9% of the net lot area may consist of hardscape areas. For single family residential development, hardscape is the solid, hard, elements or structures that are incorporated into landscaping. The hardscape includes, but is not limited to, structures, paved areas, stairs, walkways, decks, patios, rockeries and retaining walls, and similar constructed elements that do not have a roof. The hardscape within the landscaping area consists of materials such as wood, stone, concrete, gravel, permeable pavements or pavers, and similar materials. Hardscape does not include solid, hard elements or structures that are covered by a minimum of two feet of soil intended for softscape (for example, a septic tank covered with at least two feet of soil and planted shrubs is not hardscape). The hardscape does not include driving surfaces or buildings.
In addition, unused lot coverage may also be improved with hardscape.

HARDSCAPE CALCULATIONS

A.	Gross Lot Area	17,634	Square Feet
B.	Net Lot Area	17,634	Square Feet
C.	Area Borrowed from Lot Coverage	0	Square Feet
D.	Allowed Hardscape Area = 9% of lot area + C	9	% of Lot
E.	Allowed Hardscape Area	1,587	Square Feet
F.	Total Existing Hardscape Area:		
	1. Uncovered Decks	734	Square Feet
	2. Uncovered Patios	405	Square Feet
	3. Walkways	116	Square Feet
	4. Stairs	129	Square Feet
	5. Rockeries and Retaining Walls	66	Square Feet
	6. Other _____		Square Feet
	7. Total Existing Hardscape Area (F1+F2+F3+F4+F5+F6)	1,450	Square Feet
G.	(Total Hardscape Area Removed)	1,450	Square Feet
H.	Total New Hardscape Area:		
	1. Uncovered Decks	452	Square Feet
	2. Uncovered Patios	61	Square Feet
	3. Walkways	528	Square Feet
	4. Stairs	245	Square Feet
	5. Rockeries and Retaining Walls	80	Square Feet

	6. Other _____		Square Feet
	7. Total New Hardscape Area (H1+H2+H3+H4+H5+H6)	1,366	Square Feet
I.	Total Project Hardscape Area = (F7 - G) + H7	1,366	Square Feet
J.	Total Project Hardscape Area = (I/B)x100	7.7	% of Lot

Hardscape calculations shown on Plan Sheet # A-1.1

GROSS FLOOR AREA (GFA)

For single family residential development, GFA is the total square footage of floor area, bounded by the exterior faces of the building(s). The GFA includes the floor area of the main building, accessory buildings, garages, attached roofed decks on the second or third story of a single family home, staircases, etc. The GFA does not include second- or third-story uncovered decks or uncovered rooftop decks.
The GFA includes the floor area of the main building, accessory buildings, garages, attached roofed decks on the second or third story of a single family home, staircases, etc. The GFA does not include second- or third-story uncovered decks or uncovered rooftop decks. GFA does not include any portion of a building that is below ground (refer to page 6).

Allowed GFA

A. R-8.4: 5,000 square feet or 40% of the lot area, whichever is less.
B. R-9.6: 8,000 square feet or 40% of the lot area, whichever is less.
C. R-12: 10,000 square feet or 40% of the lot area, whichever is less.
D. R-15: 12,000 square feet or 40% of the lot area, whichever is less.
E. All zones: Lots with a lot area of 7,500 square feet or less, the lesser of 3,000 square feet or 45% of the lot area.
F. All zones: If an accessory dwelling unit is proposed, the 40% allowed GFA may be increased by the lesser of 5 percentile points, or the floor area of the accessory dwelling unit. Provided, this allowance shall not result in a GFA of more than 4,500 square feet or 45% of the lot area, whichever is less.

GFA Modifiers

The GFA calculation for a floor with a ceiling height of 12 to 16 feet, is 150% of the area of the floor.
The GFA calculation for a floor with a ceiling height of more than 16 feet, is 200% of the area of the floor.
The GFA calculation for a stair case shall be counted as a single floor for the first two stories accessed by the stair case. For each additional story above two stories, the stair case shall count as a single floor area.
**Floor plans shall identify rooms with a ceiling height of more than 12 feet and rooms with a ceiling height of more than 16 feet.*
All building areas must be identified and labeled on the site plan. Please distinguish all new construction from existing areas on both your drawing and in the calculations you complete below.

Will you be excluding a portion of the basement floor area? Yes ☐ No ☐
If yes, you must provide basement floor area calculations, with your building permit application, that show how you determined what portion of the basement will be excluded. Refer to page 6.

GROSS FLOOR AREA CALCULATIONS

Building Area	Existing Area	Removed Area	New/Addition Area	Total
Upper Floor	____ Sq. Ft.	____ Sq. Ft.	2,369 Sq. Ft.	____ Sq. Ft.
Main Floor	____ Sq. Ft.	____ Sq. Ft.	2,639 Sq. Ft.	____ Sq. Ft. (INCLUDES 438 SF PORCH)
Gross Basement Area	____ Sq. Ft.	____ Sq. Ft.	2,851 Sq. Ft.	____ Sq. Ft. (INCLUDES 456 SF PORCH)
Garage/ Carport	____ Sq. Ft.	____ Sq. Ft.	924 Sq. Ft.	____ Sq. Ft.
Total Floor Area	____ Sq. Ft.	____ Sq. Ft.	8,783 Sq. Ft.	____ Sq. Ft.
Accessory Buildings	____ Sq. Ft.	____ Sq. Ft.	390 Sq. Ft.	____ Sq. Ft.

Accessory Dwelling Unit	____ Sq. Ft.	____ Sq. Ft.	804 Sq. Ft.	____ Sq. Ft.
2nd & 3rd Story Roofed Decks	____ Sq. Ft.	____ Sq. Ft.	325 Sq. Ft.	____ Sq. Ft.
Basement Area Excluded	____ Sq. Ft.	____ Sq. Ft.	____ Sq. Ft.	____ Sq. Ft.
150% GFA Modifier* (main and upper floor x2)	____ Sq. Ft.	____ Sq. Ft.	____ Sq. Ft.	____ Sq. Ft.
200% GFA Modifier* (main and upper floor x2)	____ Sq. Ft.	____ Sq. Ft.	____ Sq. Ft.	____ Sq. Ft.
Staircase GFA Modifier* (x2 for a three story staircase, x3 for a four story staircase)	____ Sq. Ft.	____ Sq. Ft.	____ Sq. Ft.	____ Sq. Ft.
TOTAL Building Area	____ Sq. Ft.	____ Sq. Ft.	10,302 Sq. Ft.	____ Sq. Ft.

**Enter the actual room area*

A.	Lot Area		17,634	Square Feet
B.	Zone R-8.4 ☐ R-9.6 ☐		R-12 ☐	R-15 ☑
C.	Allowed Gross Floor Area (refer to "allowed GFA")		7,053.6	Square Feet
D.	Allowed Gross Floor Area		40	% of Lot
E.	Proposed Gross Floor Area		6,818	Square Feet
F.	Proposed Gross Floor Area		38.7	% of Lot

Gross floor area calculations found on Plan Sheet # A-1.1

Basement exclusion calculations found on Plan Sheet # N/A

BUILDING HEIGHT

All building height measurements must be taken from existing grade or finished grade, whichever is lower. Existing grade refers to ground surface as it exists at the proposed building perimeter before grading or other alterations take place. Finished grade refers to the ground surface as it exists at the building perimeter after grading or other alterations take place.

Single family new construction and additions are limited to a maximum height of 30 ft. above the Average Building Elevation (ABE) – see section on next pages. The height is measured to the top of the structure. On the downhill side of a sloping lot, the wall façade height is also limited to a height of 30 feet measured from existing or finished grade (whichever is lower) to the top of the exterior wall facade supporting the roof framing, rafters, trusses, etc.

A topographic survey is required at permit application when the proposed building height is within 2 ft. of the allowable building height. The survey must include a statement that attests the average contour elevation within the vicinity of the building footprint to be accurate within 6 inches vertically and horizontally from actual elevations.

BUILDING HEIGHT CALCULATIONS

A.	Average Building Elevation (ABE) calculations located on sheet #:	A1.0	
B.	Allowable Building Height (ABE + 30 ft.)	90.41	Feet
C.	Proposed Building Height	90.24	Feet
D.	Benchmark Elevation*	SSMH 89.25	Feet
E.	Describe Benchmark Location (must be undisturbed throughout project)	Manhole in access easement east of power transformer	
F.	Sloping lot (Downhill side)- maximum height of top of exterior wall façade above lowest existing grade (30-ft max)	28'	Feet
G.	ABE and Allowable Building Height Shown on elevations plan sheet #	A-7.1, 7.2, 7.3	
H.	Topo-survey Accuracy Attested on Plan Sheet #	A-1.3 AND A-1.4	

Note: survey must attest to accuracy when proposed building height is within 2 feet of the allowable building height. Please see page 8 for more information on calculating Average Building Elevation (ABE)
*The benchmark elevation is a fixed elevation point on or off site that will not be disturbed during development activity and is used to verify the final building height.

BASEMENT FLOOR AREA CALCULATION

The Mercer Island Development Code allows for the portion of the basement floor area which is below grade to be excluded from the Gross Floor Area. That portion of the basement which will be excluded is calculated as shown:
Portion of Excluded Basement Floor Area = Total Basement Area x

$$\frac{\Sigma \text{ (Wall Segment Coverage x Wall Segment Length)}}{\text{Total of all Wall Segment lengths}}$$

Where the terms are defined as follows:

Total Basement Area: The total amount of all basement floor area.
Wall Segment Coverage: The portion of an exterior wall below existing or finished grade, whichever is lower. It is expressed as a percentage. Refer to example below.
Wall Segment Length: The horizontal length of each exterior wall in feet.

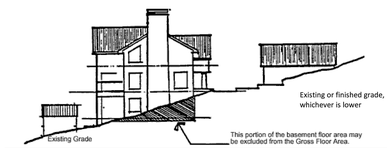

EXAMPLE OF BASEMENT FLOOR AREA CALCULATION

This example illustrates how a portion of the basement floor area may be excluded from the Gross Floor Area. In order to complete this example, the following information is needed:
a. A topographic map of the existing (e) grades and showing proposed finished (f) grades.
b. Building plans showing dimensions of all exterior wall segments and floor areas.
c. Building elevations showing the location of existing and finished grades in relation to basement level.

Step One
Determine the number and lengths of the Wall Segments.

Step Two
Determine the Wall Segment Coverage (in %) for each Wall Segment. In most cases this will be readily apparent, for example a downhill elevation which is entirely above existing and finished grade. In other cases, where the existing contours are complex, an averaging system shall be used. Refer to illustration.

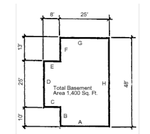

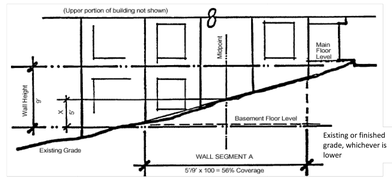

Step Three
Multiply each Wall Segment Length by the percentage of each Wall Segment Coverage and add these results together. Divide that number by the sum of all Wall Segment Lengths. This calculation will result in a percentage of basement wall which is below grade. (This calculation is most easily completed by compiling a table of the information as illustrated below.)

Wall Segment	Length x	Coverage=	Result
A	25'	56%	14%
B	10'	0%	0%
B	8'	0%	0%
D	25'	0%	0%
E	8'	0%	0%
F	13'	0%	0%
G	25'	60%	15%
H	48'	100%	48%
Totals	**162'**	**NA**	**77%**

Step Four
Multiply the Total Basement Floor Area by the above percentage to determine the Excluded Basement Floor Area. Portion of Excluded Basement Floor Area Calculation below

$$1{,}400 \text{ Sq. Ft.} \times \frac{(25' \times 56\% + 10' \times 0\% \ldots 25' \times 60\% + 48' \times 100\%)}{162'}$$

= 1,400 Sq. Ft. x 47.53%
= 665.42 Sq. Ft. Excluded from the Gross Floor Area

CALCULATING AVERAGE BUILDING ELEVATION (ABE)

No part of a structure may exceed 30 feet in height above the "Average Building Elevation" to the top of the structure, except that on the downhill side of a sloping lot the structure shall not extend to a height greater than 30 feet measured from existing or finished grade to the top plate of the roof; provided the roof ridge does not exceed 30 feet in height above the "Average Building Elevation." ABE is defined as: The elevation established by averaging the elevation at existing or finished grade, whichever is lower, at the center of all exterior walls of the completed building.

NOTE:
INCOMPLETE AVERAGE BUILDING ELEVATION INFORMATION COULD SUBSTANTIALLY DELAY THE PROCESSING OF YOUR APPLICATION

AVERAGE BUILDING ELEVATION FORMULA:
(Mid-point Elevation of Individual Wall Segment) x (Length of Individual Wall Segment)
(Total Length of Wall Segments)
—OR—
(Axa)+(Bxb)+(Cxc)+(Dxd)+(Exe)+(Dxd)+(Exe)+(Fxf)+(Gxg)+(Hxh)
a + b + c + d + e + f + g + h

WHERE: A,B,C,D… = Lower of Finished or Existing Ground Elevation at Midpoint of Wall Segment
AND: a,b,c,d… = Length of Wall Segment Measured on Outside Wall

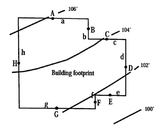

MIDPOINT ELEVATION	WALL SEGMENT LENGTH
A = 105.9 feet	a = 30 feet
B = 104.7 feet	b = 9 feet
C = 103.7 feet	c = 17 feet
D = 102.7 feet	d = 25 feet
E = 101.6 feet	e = 13 feet
F = 101.7 feet	f = 6 feet
G = 102.2 feet	g = 34 feet
H = 104.5 feet	h = 40 feet

ABE CALCULATION:

$$\frac{(105.9)(30)+(104.7)(9)+(103.7)(17)+(102.2)(25)+(101.6)(13)+(101.7)(6)+(102.2)(34)+(104.5)(40)}{30 + 9 + 17 + 25 + 13 + 6 + 34 + 40}$$

$$\frac{18023'}{174'} = \textbf{103.6' Average Building Elevation (ABE)}$$

NOTE: This example is not to scale. Site plans submitted to the building department must be to scale.

BEFORE SUBMITTING YOUR CONSTRUCTION DRAWINGS, CHECK TO SEE THAT YOU HAVE PROVIDED THE INFORMATION BELOW.

- ☐ The site plan and the elevation drawings must be drawn to scale, for example 1" = 20', and based on a survey.
- ☐ Clearly show existing topography on your site plan. Topography should be shown in 2' increments.
- ☐ Submit (with the site plan) your average building elevation calculations using the formula provided on page 8.
- ☐ Indicate on an elevation drawing where the average building elevation strikes the building and the proposed ridge elevation (see below for example).
- ☐ Elevation drawings for all sides of the building.
- ☐ Indicate on the site plan the elevation of the finished floor or garage slab.
- ☐ Indicate the elevation and location of a fixed point (benchmark) within the ADJACENT RIGHT-OF-WAY or other point approved by the Building Official. The benchmark elevation and location must be provided and cannot be a part of the proposed structure. Note: Benchmark must be established, verified by a licensed surveyor and remain during construction so height can be verified when completed.
- ☐ For additions, you must provide an average building elevation calculation for the entire structure.
- ☐ If a portion of the basement floor area will be excluded from the gross floor area, provide the exclusion calculations with your site plan. The formula for basement area exclusions is shown on page 6.
- ☐ Indicate ceiling heights greater than 12' and greater than 16' on floor plans.

CROSS-SECTION REPRESENTATION OF ABE

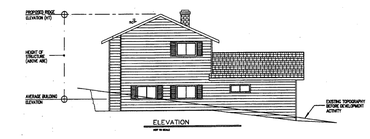

R F ARCHITECTURE
P H : (2 5 3) 3 5 9 - 4 0 3 9
R I C H A R D @ R F A R C H I T E C T U R E . C O M
7 4 2 1 214TH AVE E BONNEYLAKE, WA 98391

6080
REGISTERED ARCHITECT
RICHARD W. FLAKE
STATE OF WASHINGTON

All drawings, specifications, plans, ideas, arrangements, and designs represented or referred to are the property of and owned by Richard Flake Architect in whether the project for which they are made is executed or not. They were created, evolved, developed and produced for sole use on and in connection with this project and none of the above may be disclosed or given to or used by any person, firm, or corporation for any use or purpose whatsoever including any other project, except upon written permission of Richard Flake Architect.

Copyright 2023
Richard Flake Architect

M U R R A Y R E S I D E N C E
N E W S I N G L E F A M I L Y R E S I D E N C E
9 8 0 4 0
W A

DESIGN: RWF
DRAWN:
HAVILAND CONSULTING
CHECKED: RWF
REVISIONS:
PER CITY REVIEW 10-22-2021
REVISIONS
PER CITY REVIEW 8-8-2023
REVISIONS

September 15, 2023

A-I.5

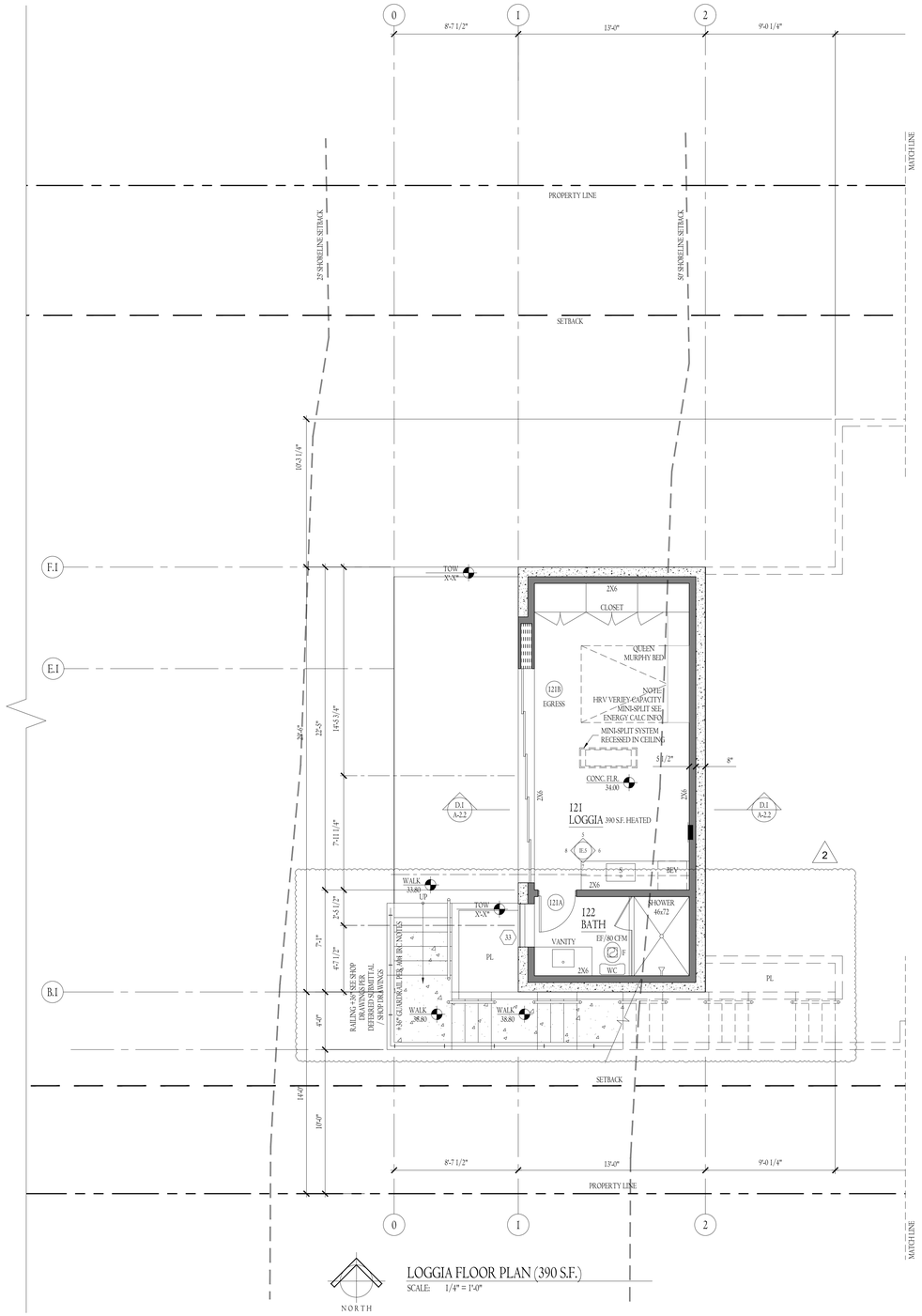

LOGGIA FLOOR PLAN (390 S.F.)

SCALE: 1/4" = 1'-0"

NORTH

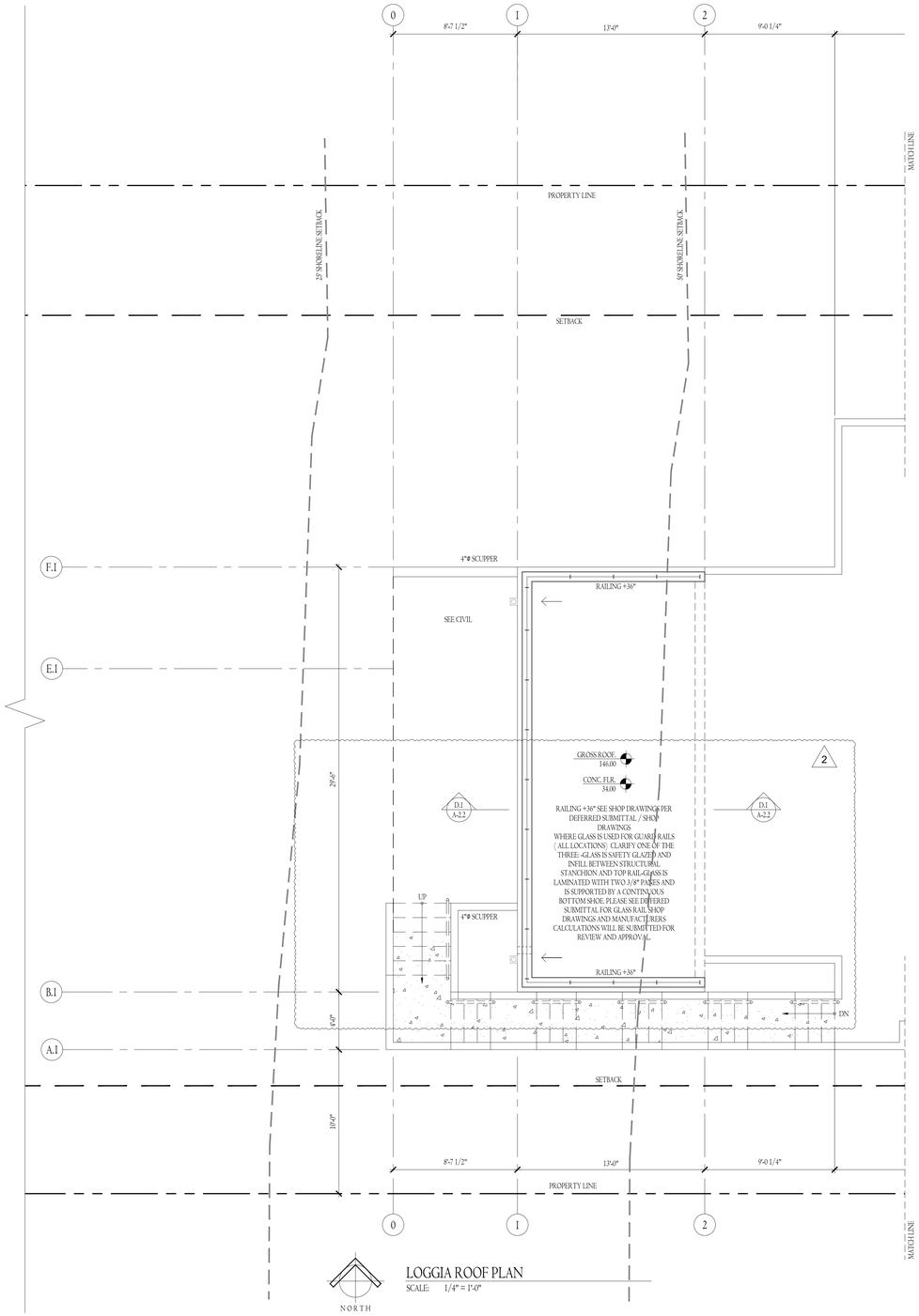

LOGGIA ROOF PLAN

SCALE: 1/4" = 1'-0"

NORTH

RF ARCHITECTURE
PH: (253)359-4039
RICHARD@RFARCHITECTURE.COM
7421 214TH AVE E BONNEYLAKE, WA 98391

6080
REGISTERED ARCHITECT
RICHARD W. FLAKE
STATE OF WASHINGTON

All drawings, specifications, plans, ideas, arrangements, and designs represented or referred to are the property of and owned by Richard Flake Architect no whether the project for which they are made is executed or not. They were created, evolved, developed and produced for sole use on and in connection with this project and none of the above may be disclosed or given to or used by any person, firm, or corporation for any use or purpose whatsoever including any other project, except upon written permission of Richard Flake Architect.

Copyright 2023
Richard Flake Architect

MURRAY RESIDENCE

NEW SINGLE FAMILY RESIDENCE
4800 MERCER ISLAND, WA 98040

DESIGN: RWF
DRAWN: HAVILAND CONSULTING
CHECKED: RWF

REVISIONS:

1 PER CITY REVIEW 10.22.2023
REVISIONS

1 PER CITY REVIEW 8.8.2023
REVISIONS

September 15, 2023

A-2.1

ROOF
50-YEAR, COMP. SHINGLE ROOFING
2X6 CEDAR FASCIA / 2X10 CEDAR RAKE W/ 2-1/4" BRICKMOULD W/ PRE-FINISHED ALUMINUM DRIP METAL
1/2X4 CEDAR SOFFIT W/ 2" CONT. SCREENED SOFFIT VENT

WALL (PER EACH EXTERIOR ELEVATION)
#1 PRE-STAINED SAWN CEDAR SHINGLES W/ MAXIMUM 6" EXPOSURE O/ MESH RAIN SCREEN O/ VAPROSHIELD BREATHABLE MEMBRANE O/ 1/2" CDX PLYWOOD.

COORDINATE ALL SILLS, WALL SKIRT WEEP FLASHING & COLUMN SKIRT FLASHING TERMINATIONS W/ APPROVED PRE-FINISHED PAN & BASE FLASHING DETAILS PER SHOP DRAWINGS

PER EXTERIOR ELEVATIONS & WALL SECTIONS. SEE CONSTRUCTION DETAILS OF SWOOPED SHINGLE WALLS. SWOOPS TO BE CONSTRUCTED OF 2X PT SUPPED STUDS AT 16" O.C. MAX & THE CELLS FILLED SOLID W/ SPRAY FOAM W/ 3/8" PT CDX PLYWOOD. SOLID BLOCK AT BOTTOM W/ PRE-FINISHED ALUMINUM SKIRT FLASHING.

BRICK VENEER INSTALLED PER IRC & MANUF. RECOMMENDATIONS O/ AIR SPACE/MESH RAIN SCREEN W/ WEEPS & DRIP METAL AT BOTTOM. TO BE INSTALLED O/BREATHABLE VAPROSHIELD WATERPROOF MEMBRANE O/ PRESSURE TREATED 1/2" CDX PLYWOOD (REFER TO COORDINATION W/ WATERPROOFING DETAILS PER SHEET A-11.1

KOLBE.....ULTRA SERIES CLAD DOORS & WINDOWS W/ FACTORY SUPPLIED PRE-FINISHED ALUMINUM BACKRAND TRIM. COORDINATE W/ SIDING FOR WATERPROOFING DETAILS & FLASHING AT HEAD REQUIREMENTS. SEQUENCING CRITICAL AT HEADS & W/ COORDINATION AT DOOR PAN INSTALLATIONS.

WOOD SILL CAPS AT COVERED PORCHES TO BE 2X PRE-FINISHED CEDAR O/ WATERPROOF MEMBRANE W/ 1X CEDAR PRE-FINISHED APRON TRIM (TYPICAL AT ALL SIMILAR CONDITIONS)

FRONT PORCH COLUMNS
PRE-FINISHED METAL PAN - 4 EDGES AT TOP O/ 2X PRE-FINISHED CEDAR WOOD CAP O/ PRE-FINISHED COVE MOULD (DIMENSIONS PER SUBMITTALS) O/ PRE-FINISHED WOOD COLUMN WRAPS W/ MITERED OR BISCUITED EDGE CORNERS O/ MESH RAIN SCREEN O/ VAPROSHIELD WATERPROOF BREATHABLE MEMBRANE O/ 1/2" CDX PLYWOOD O/ WOOD FRAMING PER STRUCTURAL.

MAIN FLOOR TERRACE CONSTRUCTION
TEMPERED 1/4" THICK GLASS PANEL & PRE-FINISHED ALUMINUM STANCHIONS - CAPLESS GUARDRAIL PER APPROVED SHOP DRAWINGS O/ PRE-CAST CONCRETE SILL/WALL CAP PER ELEVATIONS & SHOP DRAWINGS. (COORDINATE W/ DETAILS AT SLOPED WATERPROOF DECK & PRE-CAST - STONE VENEER PAVER SYSTEM O/ BISON ADJUSTABLE STANDS PER APPROVED SHOP DRAWINGS (COORDINATE W/ WATERPROOF DECK SHOP DRAWINGS & APPROVED DECK - DRAIN LOCATIONS. ALSO COORDINATE LOCATIONS PER CIVIL DRAWINGS)

CHIMNEY CAPS
PRE-FINISHED CHIMNEY CAPS & RANGE HOOD BLOWER CAPS - SEE APPROVED SHOP DRAWINGS FOR WATERPROOF PANS / FLUES / CAP INSTALLATION REQUIREMENTS TO ENSURE WATERPROOFING INTEGRITY.

TYPICAL EXTERIOR WALL
SIDING MATERIALS PER ELEVATIONS & EXTERIOR MATERIALS LIST.
RAINSCREEN MESH O/ VAPROSHIELD WEATHERPROOF BREATHABLE MEMBRANE O/
1/2" CDX PLYWOOD - SEE STRUCT.
2X6 STUDS @ 16" O.C. TYP U.N.O.
R-25 INSULATION ASSY'S PER SHEET A-0.2
5/8" SHEETROCK

ROOF ASSEMBLY 1
COMPOSITION SHINGLE - 50 YR.
WEATHER PROOFING MEMBRANE.
5/8" CDX PLYWOOD - SEE STRUCT.
RAFTERS PER STRUCT.
R-38 INSULATION ASSY'S NON-VENTED SEE SHEETS A-0.2 FOR ENERGY
5/8" SHEET ROCK

ROOF ASSEMBLY 2
COMPOSITION SHINGLE - 50 YR.
WEATHER PROOFING MEMBRANE.
5/8" CDX PLYWOOD - SEE STRUCT.
RAFTERS PER STRUCT.
R-38 INSULATION ASSY'S NON-VENTED SEE SHEETS A-0.2 FOR ENERGY
5/8" SHEET ROCK

FLOOR ASSEMBLY 3 (OVER GARAGE)
1-1/2" GYPCRETE W/ RADIANT TUBE
1-1/8" T&G PLYWOOD PER STRUCT.
TJI'S PER STRUCT.
FLOOR INSULATOR: R-38
5/8" GWB

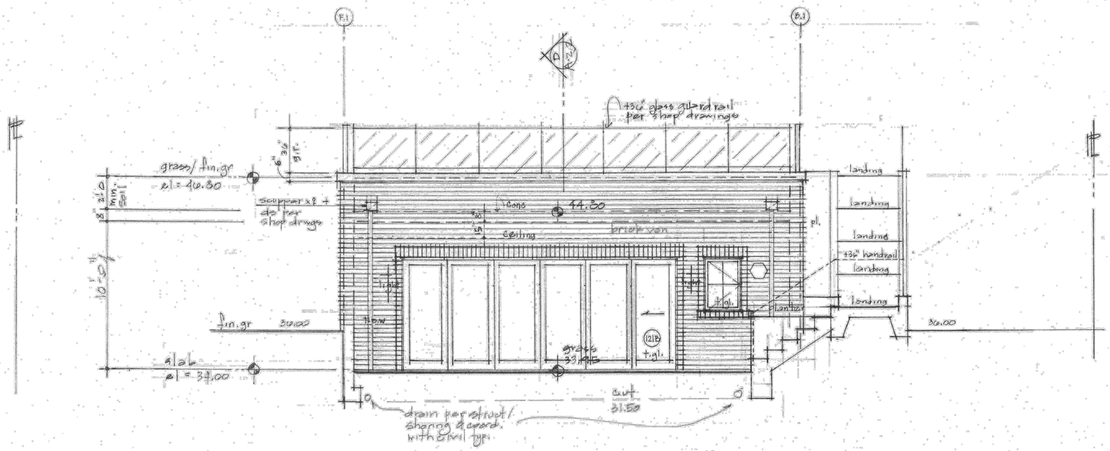

LOGGIA WEST ELEVATION
scale: 1/4" = 1'-0"

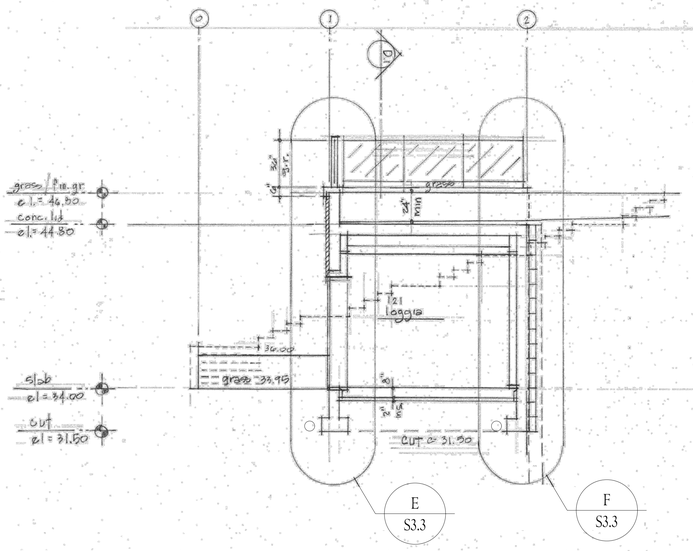

BUILDING SECTION
D.1
scale: 1/4" = 1'-0"

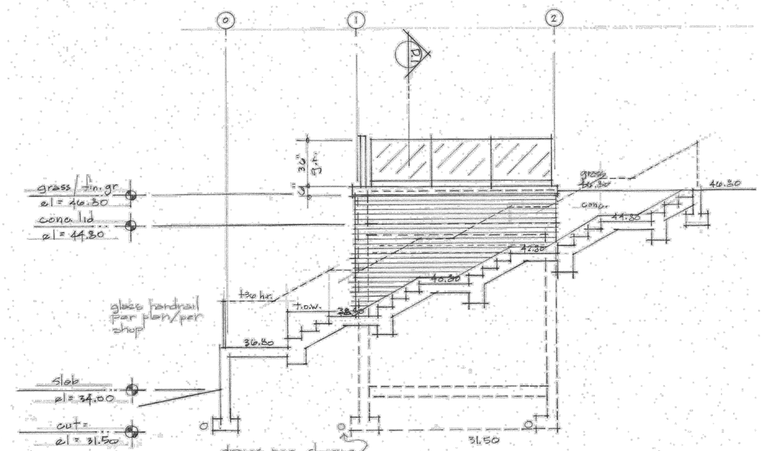

SOUTH ELEVATION
scale

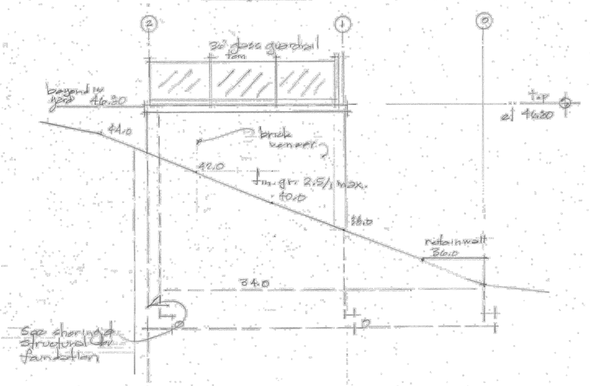

NORTH ELEVATION

RF ARCHITECTURE
PH: (253) 359-4039
RICHARD@RFARCHITECTURE.COM
7421 214TH AVE E BONNEYLAKE, WA 98391

6080
REGISTERED ARCHITECT
RICHARD W. FLAKE
STATE OF WASHINGTON

All drawings, specifications, plans, ideas, arrangements, and designs represented or referred to are the property of and owned by Richard Flake Architect in whether the project for which they are made is executed or not. They were created, evolved, developed and produced for sole use on and in connection with this project and none of the above may be disclosed or given to or used by any person, firm, or corporation for any use or purpose whatsoever including any other project, except upon written permission of Richard Flake Architect.

Copyright 2023
Richard Flake Architect

MURRAY RESIDENCE
NEW SINGLE FAMILY RESIDENCE
4808 40TH AVE S.
MERCER ISLAND, WA 98040

DESIGN: RWF
DRAWN:
HAVILAND CONSULTING
CHECKED: RWF
REVISIONS:
1 PER CITY REVIEW 10.22.2023 REVISIONS
1 PER CITY REVIEW 8.8.2023 REVISIONS

September 15, 2023

1 A-2.2

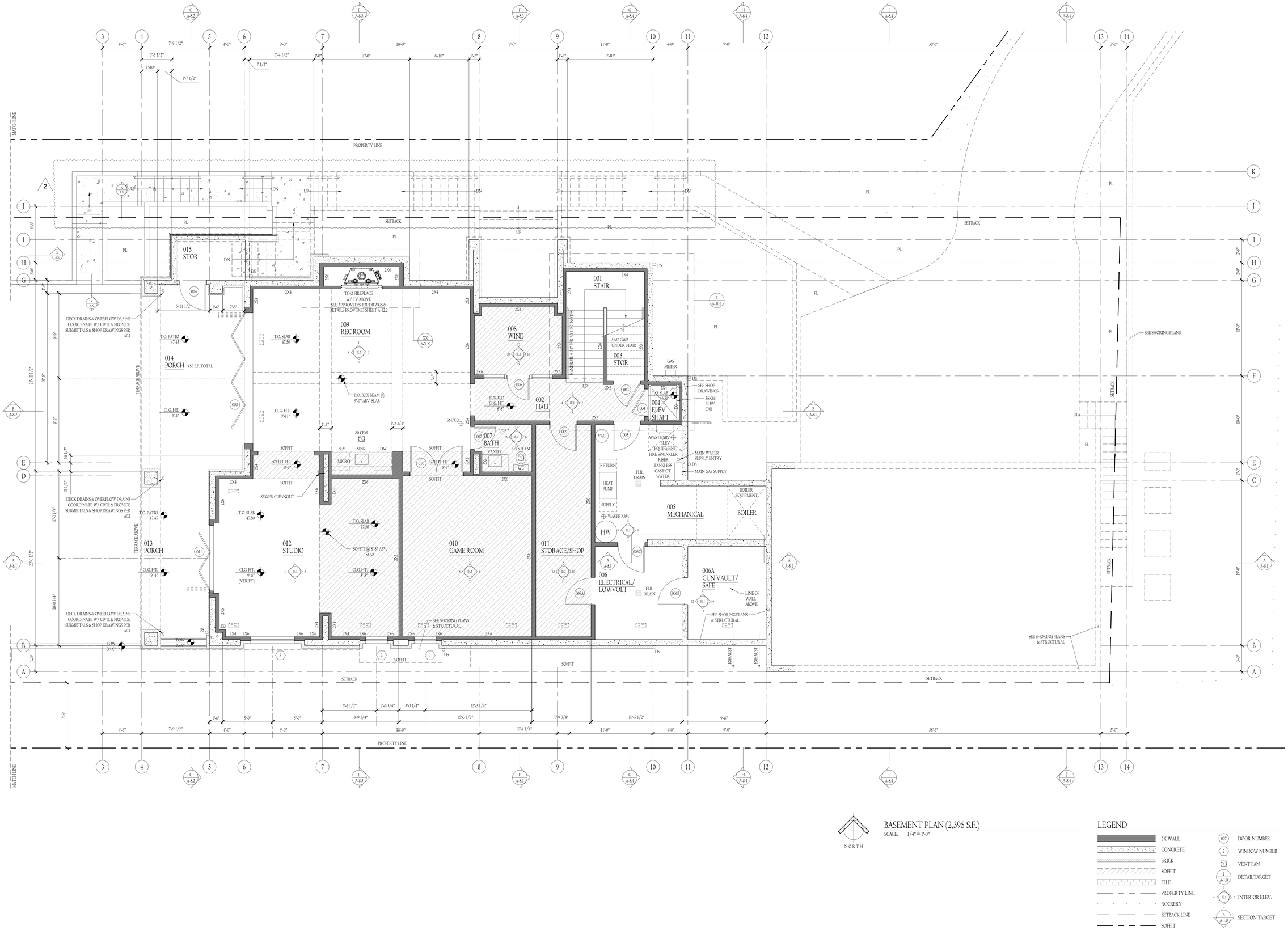

BASEMENT PLAN (2,395 S.F.)

SCALE: 1/4" = 1'-0"

NORTH

LEGEND

- 2X WALL
- CONCRETE
- BRICK
- SOFFIT
- TILE
- PROPERTY LINE
- ROCKERY
- SETBACK LINE
- SOFFIT
- DOOR NUMBER
- WINDOW NUMBER
- VENT FAN
- DETAIL TARGET
- INTERIOR ELEV.
- SECTION TARGET

RF ARCHITECTURE

PH: (2 5 3) 3 5 9 - 4 0 3 9

RICHARD@RFARCHITECTURE.COM

7421 214TH AVE E BONNEYLAKE, WA 98391

6080 REGISTERED ARCHITECT RICHARD W. FLAKE STATE OF WASHINGTON

All drawings, specifications, plans, ideas, arrangements, and designs represented or referred to are the property of and owned by Richard Flake Architect in whether the project for which they are made is executed or not. They were created, evolved, developed and produced for sole use on and in connection with this project and none of the above may be disclosed or given to or used by any person, firm, or corporation for any use or purpose whatsoever including any other project, except upon written permission of Richard Flake Architect.

Copyright 2023
Richard Flake Architect

IDENCE

RESIDENCE

WA 98040

MURRAY RESIDENCE

NEW SINGLE FAMILY RESIDENCE FOR MERCER ISLAND, WA

DESIGN: RWF

DRAWN: HAVILAND CONSULTING

CHECKED: RWF

REVISIONS:

PER CITY REVIEW 1 - 2 2 - 2 0 2 3 REVISIONS

PER CITY REVIEW 8 - 8 - 2 0 2 3 REVISIONS

September 15, 2023

A-3.1

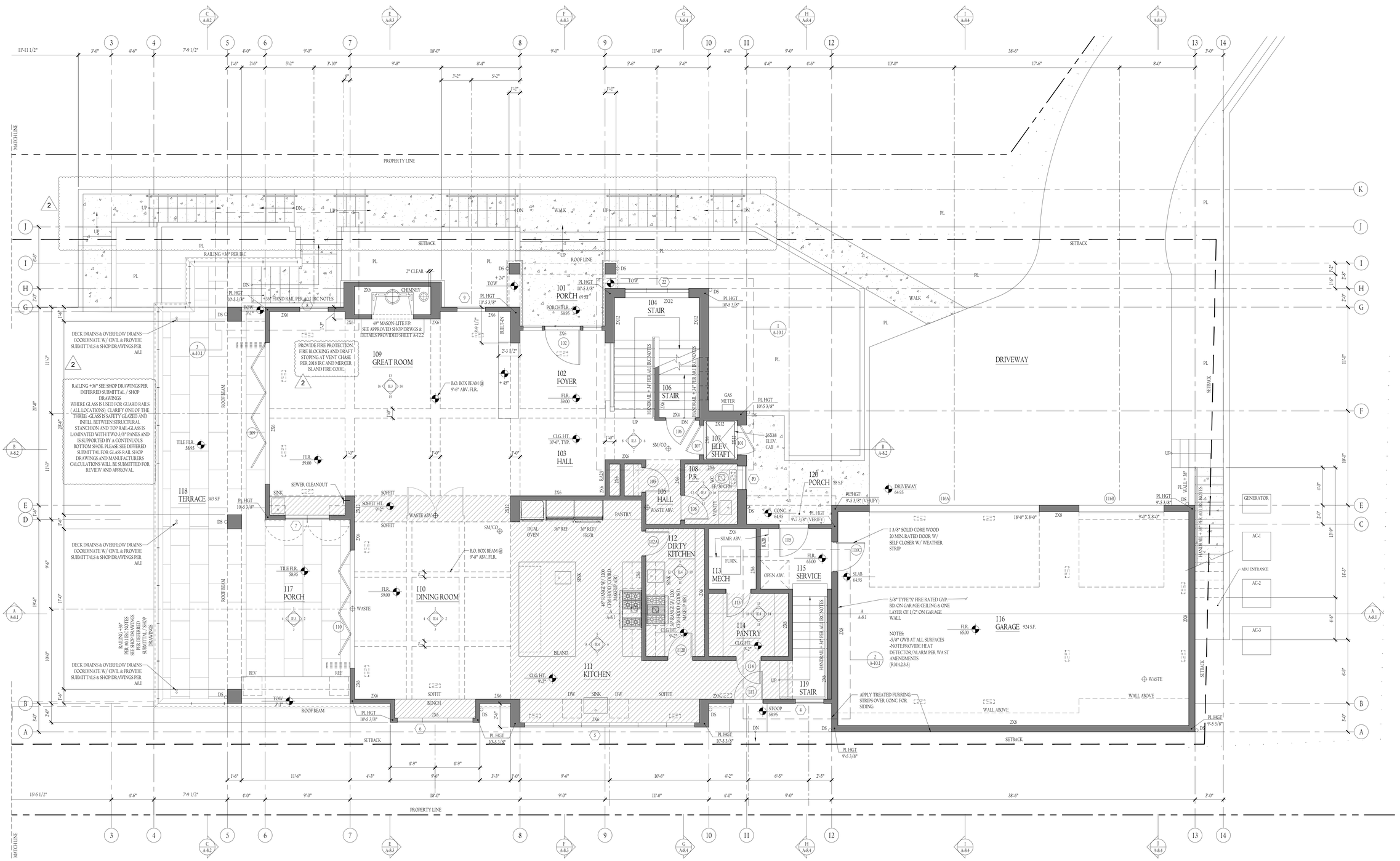

MAIN FLOOR PLAN (2,209 S.F.)

SCALE: 1/4" = 1'-0"

NORTH

LEGEND

2X WALL	DOOR NUMBER
CONCRETE	WINDOW NUMBER
BRICK	VENT FAN
SOFFIT	DETAILTARGET
TILE	INTERIOR ELEV.
PROPERTY LINE	SECTION TARGET
ROCKERY	
SETBACK LINE	
SOFFIT	

MURRAY RESIDENCE

NEW SINGLE FAMILY RESIDENCE
4 8 0 3 FOREST AVE SE
MERCER ISLAND, WA 98040

RF ARCHITECTURE
PH: (253) 359-4039
RICHARD@RFARCHITECTURE.COM
7421 214TH AVE E BONNEYLAKE, WA 98391

6080 REGISTERED ARCHITECT RICHARD W. FLAKE STATE OF WASHINGTON

All drawings, specifications, plans, ideas, arrangements, and designs represented or referred to are the property of and owned by Richard Flake Architect in whether the project for which they are made is executed or not. They were created, evolved, developed and produced for sole use on and in connection with this project and none of the above may be disclosed or given to or used by any person, firm, or corporation for any use or purpose whatsoever including any other project, except upon written permission of Richard Flake Architect.

Copyright 2023
Richard Flake Architect

DESIGN: RWF

DRAWN: HAVILAND CONSULTING

CHECKED: RWF

REVISIONS:

1 PER CITY REVIEW 10-22-2021 REVISIONS

2 PER CITY REVIEW 8-8-2023 REVISIONS

September 15, 2023

A-4.I

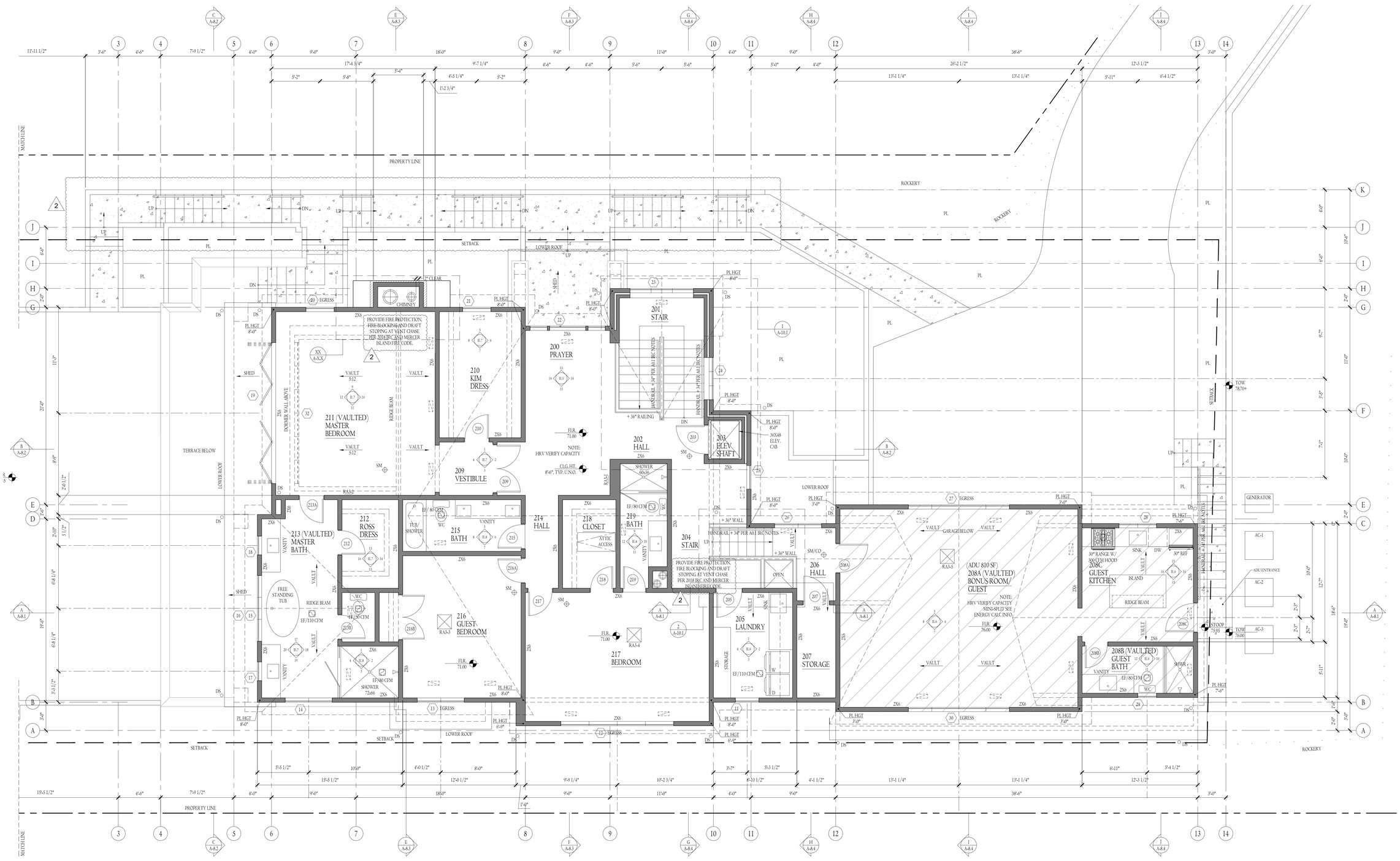

UPPER FLOOR PLAN (2,369.7 S.F.)

SCALE: 1/4" = 1'-0"

NORTH

LEGEND

- 2X WALL
- CONCRETE
- BRICK
- SOFFIT
- TILE
- PROPERTY LINE
- ROCKERY
- SETBACK LINE
- SOFFIT
- DOOR NUMBER
- WINDOW NUMBER
- VENT FAN
- DETAILTARGET
- INTERIOR ELEV.
- SECTION TARGET

RF ARCHITECTURE
PH: (253) 359-4039
RICHARD@RFARCHITECTURE.COM
7421 214TH AVE E BONNEYLAKE, WA 98391

6080 REGISTERED ARCHITECT RICHARD W. FLAKE STATE OF WASHINGTON

All drawings, specifications, plans, ideas, arrangements, and designs represented or referred to are the property of and owned by Richard Flake Architect in whether the project for which they are made is executed or not. They were created, evolved, developed and produced for sole use on and in connection with this project and none of the above may be disclosed or given to or used by any person, firm, or corporation for any use or purpose whatsoever including any other project, except upon written permission of Richard Flake Architect.

Copyright 2023
Richard Flake Architect

MURRAY RESIDENCE

NEW SINGLE FAMILY RESIDENCE
48 0 3 FOREST AVE
MERCER ISLAND, WA 98040

DESIGN: RWF

DRAWN: HAVILAND CONSULTING

CHECKED: RWF

REVISIONS:

1 PER CITY REVIEW 10-22-2021 REVISIONS

2 PER CITY REVIEW 8-8-2023 REVISIONS

September 15, 2023

A-5.I

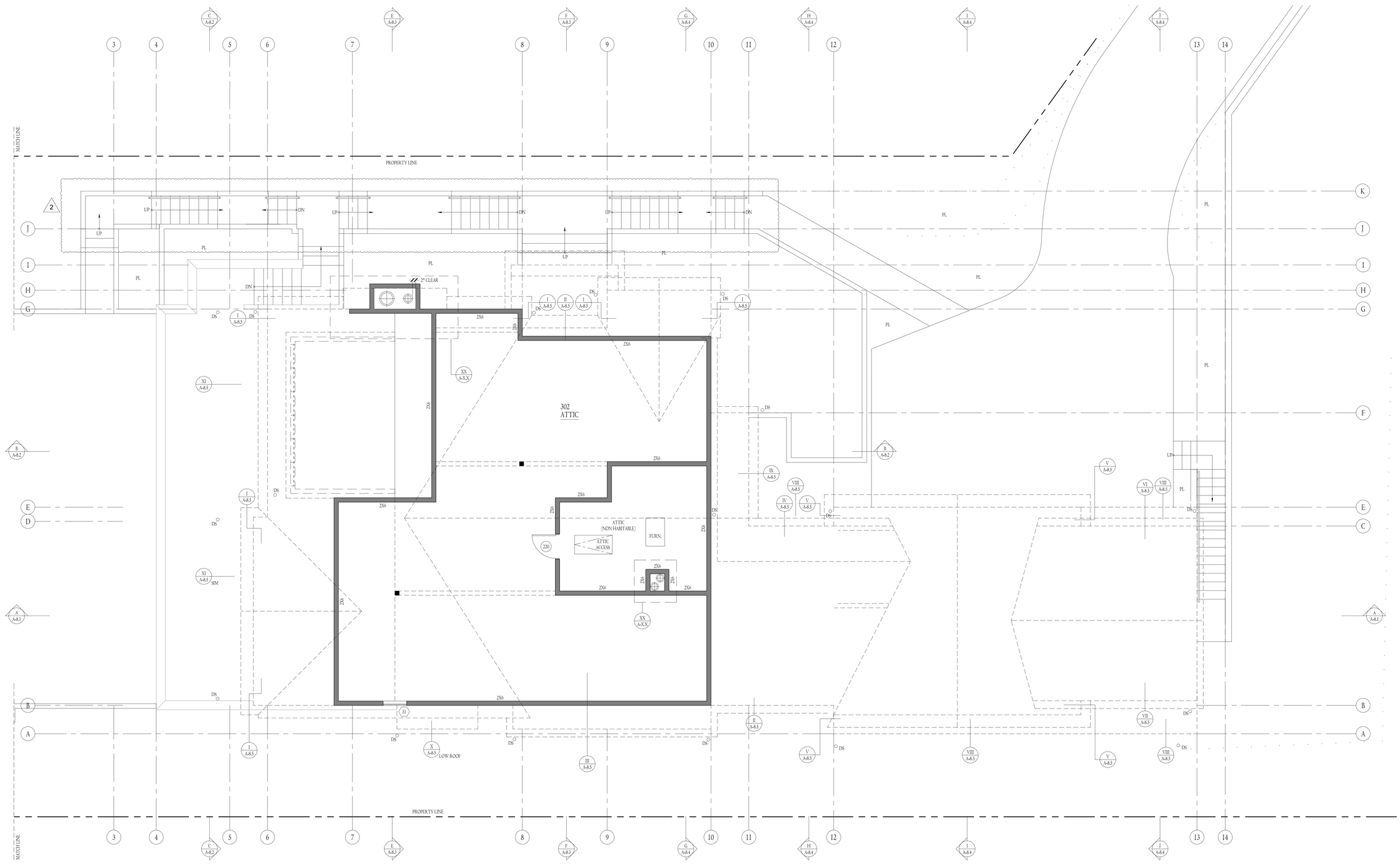

NORTH

ATTIC PLAN

SCALE: 1/4" = 1'-0"

LEGEND

- 2X WALL
- CONCRETE
- BRICK
- SOFFIT
- TILE
- PROPERTY LINE
- ROCKERY
- SETBACK LINE
- SOFFIT
- DOOR NUMBER
- WINDOW NUMBER
- VENT FAN
- DETAIL TARGET
- INTERIOR ELEV.
- SECTION TARGET

RF ARCHITECTURE
PH: (253)359-4039
RICHARD@RFARCHITECTURE.COM
7421 214TH AVE E BONNEYLAKE, WA 98391

6080 REGISTERED ARCHITECT RICHARD W. FLAKE STATE OF WASHINGTON

All drawings, specifications, plans, ideas, arrangements, and designs represented or referred to are the property of and owned by Richard Flake Architect no whether the project for which they are made is executed or not. They were created, evolved, developed and produced for sole use on and in connection with this project and none of the above may be disclosed or given to or used by any person, firm, or corporation for any use or purpose whatsoever including any other project, except upon written permission of Richard Flake Architect.

Copyright 2023
Richard Flake Architect

MURRAY RESIDENCE

NEW SINGLE FAMILY RESIDENCE
ON MERCER ISLAND, WA 98040

DESIGN: RWF
DRAWN: HAVILAND CONSULTING
CHECKED: RWF

REVISIONS:

1 PER CITY REVIEW 10.22.2021
REVISIONS

2 PER CITY REVIEW 3.8.2023
REVISIONS

September 15, 2023

A-6.1

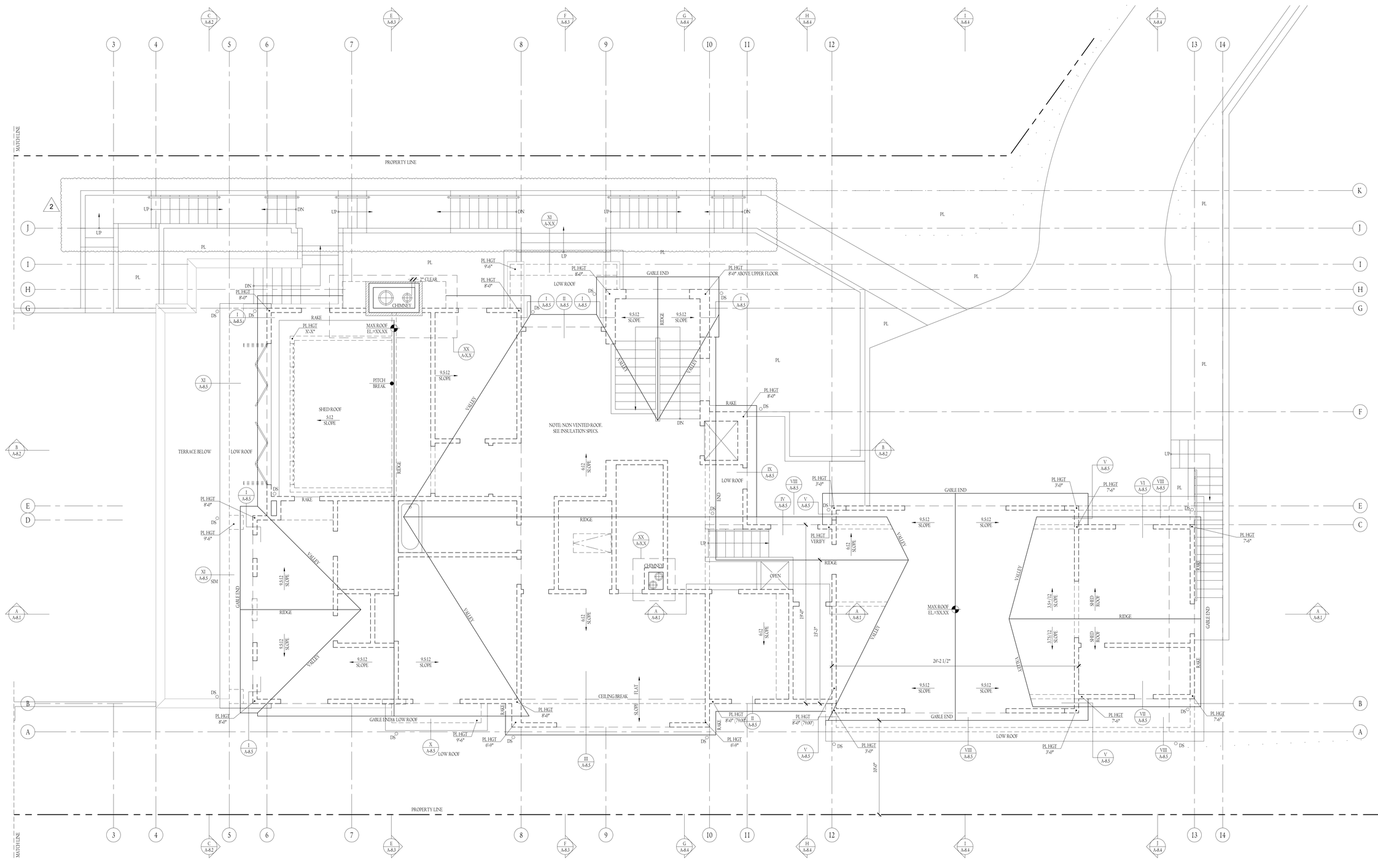

ROOF PLAN (X S.F.)

SCALE: 1/4" = 1'-0"

NORTH

LEGEND

	2X WALL	007	DOOR NUMBER
	CONCRETE	2	WINDOW NUMBER
	BRICK		VENT FAN
	SOFFIT	1 A-1.0	DETAIL TARGET
	TILE		
	PROPERTY LINE	4 B1.1 2	INTERIOR ELEV.
	ROCKERY		
	SETBACK LINE	A A-1.0	SECTION TARGET
	SOFFIT		

RF ARCHITECTURE
PH: (253) 359-4039
RICHARD@RFARCHITECTURE.COM
7421 214TH AVE E BONNEYLAKE, WA 98391

6080 REGISTERED ARCHITECT RICHARD W. FLAKE STATE OF WASHINGTON

All drawings, specifications, plans, ideas, arrangements, and designs represented or referred to are the property of and owned by Richard Flake Architect in whether the project for which they are made is executed or not. They were created, evolved, developed and produced for sole use on and in connection with this project and none of the above may be disclosed or given to or used by any person, firm, or corporation for any use or purpose whatsoever including any other project, except upon written permission of Richard Flake Architect.

Copyright 2023
Richard Flake Architect

MURRAY RESIDENCE

NEW SINGLE FAMILY RESIDENCE
4803 FOREST AVE SE
MERCER ISLAND, WA 98040

DESIGN: RWF

DRAWN: HAVILAND CONSULTING

CHECKED: RWF

REVISIONS:

1 PER CITY REVIEW 10-22-2021 REVISIONS

2 PER CITY REVIEW 8-8-2023 REVISIONS

September 15, 2023

A-6.2


MAX. ELT = 90.41
Comp roof
Cedar shingle siding
Fixed window typ. of 2 floor
Brick veneer
Footings
Footings
Comp roof
Comp roof
Comp roof
Comp roof
Brick veneer
Stone veneer
Stone veneer
Stone

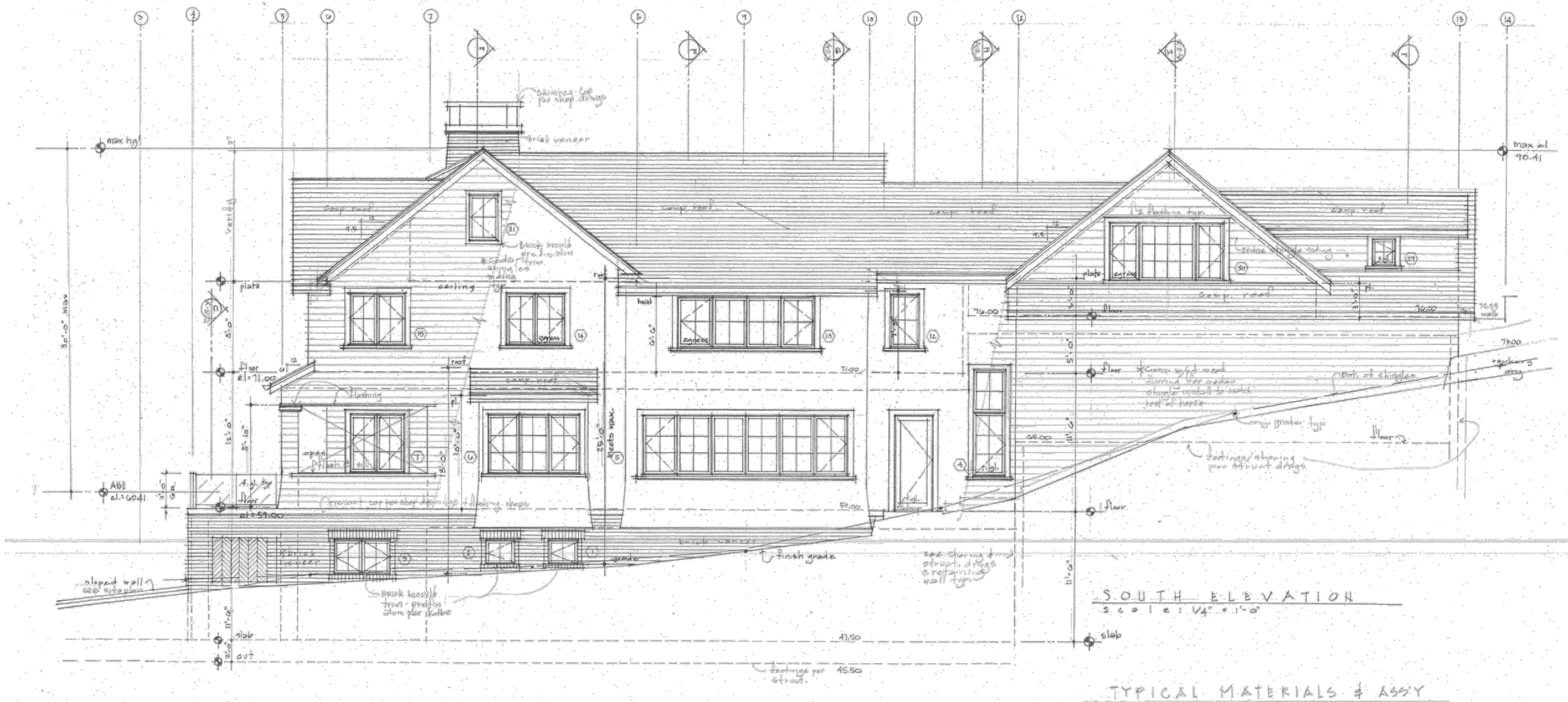
max hgt
max el 90.41
plate
ceiling
floor el=71.00
ABE el.=60.41
floor el=59.00
slab
cut
camp roof
Flashing
Finish grade
slopped wall w/ drainage
Brick veneer
Brick mould pre-finished trim
Cedar shingles
Brick veneer
Brick mould pre-finished trim
Cedar shingle siding
Cedar shingle siding

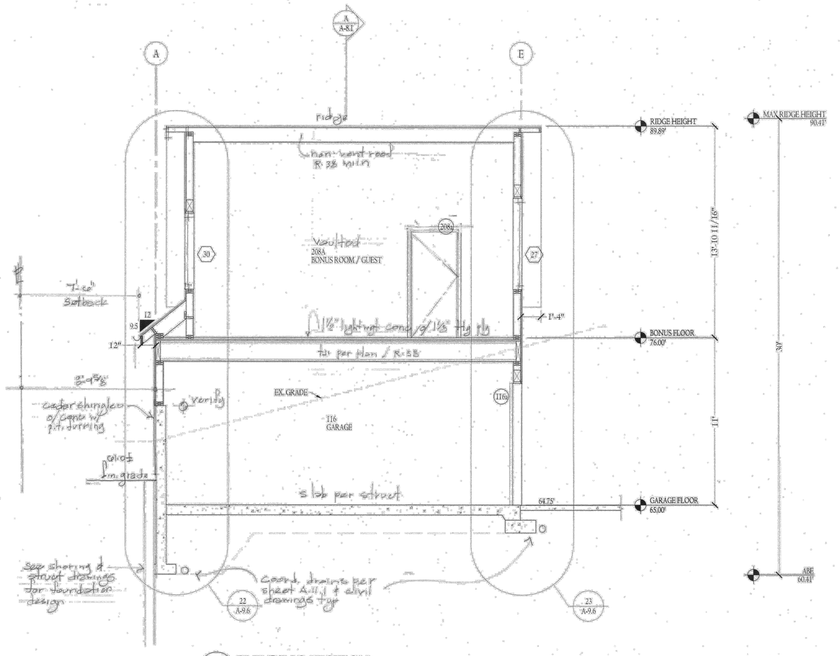

1 BUILDING SECTION
SCALE: 1/4" = 1'-0"



WEST ELEVATION
SCALE: 1/4" = 1'-0"

TYPICAL MAT'LS & ASSEMBLIES

ROOF
50-YEAR COMP. SHINGLE ROOFING
2X8 CEDAR FASCIA / 2X10 CEDAR RAKE W/ 2-1/4" BRICK MOULD W/ PRE-FINISHED ALUMINUM DRIP METAL
1/2X4 CEDAR SOFFIT W/ 2" CONT. SCREENED SOFFIT VENT

WALL (PER EACH EXTERIOR ELEVATION)
#1 PRE-STAINED SAWN CEDAR SHINGLES W/ MAXIMUM 8" EXPOSURE O/ MESH RAIN SCREEN O/ VAPROSHIELD BREATHABLE MEMBRANE O/ 1/2" CDX PLYWOOD

COORDINATE ALL SILLS, WALL SKIRT WEEP FLASHING & COLUMN SKIRT FLASHING TERMINATIONS W/ APPROVED PRE-FINISHED PAN & BASE FLASHING DETAILS PER SHOP DRAWINGS

PER EXTERIOR ELEVATIONS & WALL SECTIONS, SEE CONSTRUCTION DETAILS OF SWOOPED SHINGLE WALLS. SWOOPS TO BE CONSTRUCTED OF 2X PT RIPPED STUDS AT 16" O.C. MAX. & THEN CELLS FILLED SOLID W/ SPRAY FOAM W/ 3/8" PT CDX PLYWOOD. SOLID BLOCK AT BOTTOM W/ PRE-FINISHED ALUMINUM SKIRT FLASHING.

BRICK VENEER INSTALLED PER BIC® MANUF. RECOMMENDATIONS O/ AIR SPACE/MESH RAIN SCREEN W/ WEEPS & DRIP METAL AT BOTTOM. TO BE INSTALLED O/ BREATHABLE VAPROSHIELD WATERPROOF MEMBRANE O/ PRESSURE TREATED 1/2" CDX PLYWOOD (REFER TO) COORDINATION W/ WATERPROOFING DETAILS PER SHEET A-11.1

KOLBE ULTRA SERIES CLAD DOORS & WINDOWS W/ FACTORY SUPPLIED PRE-FINISHED ALUMINUM BACKBAND TRIM. COORDINATE W/ SIDING FOR WATERPROOFING DETAILS & Z-FLASHING AT HEAD REQUIREMENTS. SEQUENCING CRITICAL AT HEADS & W/ COORDINATION AT DOOR PAN INSTALLATIONS.

WOOD SILL CAPS AT COVERED PORCHES TO BE 2X PRE-FINISHED CEDAR O/ WATERPROOF MEMBRANE W/ 1X CEDAR PRE-FINISHED APRON TRIM (TYPICAL AT ALL SIMILAR CONDITIONS)

FRONT PORCH COLUMNS
PRE-FINISHED METAL PAN - 4 EDGES AT TOP O/ 3X PRE- FINISHED CEDAR WOOD CAP O/ PRE-FINISHED COVE MOULD (DIMENSIONS PER SUBMITTALS) O/ PRE-FINISHED WOOD COLUMN WRAPS W/ MITERED OR BISCUITED EDGE CORNERS O/ MESH RAIN SCREEN O/ VAPROSHIELD WATERPROOF BREATHABLE MEMBRANE O/ 1/2" CDX PLYWOOD O/ WOOD FRAMING PER STRUCTURAL.

MAIN FLOOR TERRACE CONSTRUCTION
TEMPERED 3/8" THICK GLASS PANEL & PRE-FINISHED ALUMINUM STANCHIONS - CAPLESS GUARDRAIL PER APPROVED SHOP DRAWINGS O/ PRE-CAST CONCRETE SILL / WALL CAP PER ELEVATIONS & SHOP DRAWINGS. (COORDINATE W/ DETAILS AT SLOPED WATERPROOF DECK & PRE-CAST = STONE VENEER PAVER SYSTEM O/ BISON ADJUSTABLE STANDS PER APPROVED SHOP DRAWINGS (COORDINATE W/ WATERPROOF DECK SHOP DRAWINGS & APPROVED DECK DRAIN LOCATIONS. ALSO COORDINATE LOCATIONS PER CIVIL DRAWINGS)

CHIMNEY CAPS
PRE-FINISHED CHIMNEY CAPS & RANGE HOOD BLOWER CAPS - SEE APPROVED SHOP DRAWINGS FOR WATERPROOF PANS / FLUES / CAP INSTALLATION REQUIREMENTS TO ENSURE WATERPROOFING INTEGRITY.

TYPICAL EXTERIOR WALL
SIDING MATERIALS PER ELEVATIONS & EXTERIOR MATERIALS LIST;
RAIN SCREEN MESH O/ VAPROSHIELD WEATHERPROOF BREATHABLE MEMBRANE O/
1/2" CDX PLYWOOD - SEE STRUCT.
2X6 STUDS @ 16" O.C. TYP U.N.O.
R-23 INSULATION ASSY PER SHEET A-0.2
5/8" SHEETROCK

ROOF ASSEMBLY 1
COMPOSITION SHINGLE - 50 YR.
WEATHER PROOFING MEMBRANE;
5/8" CDX PLYWOOD - SEE STRUCT.
RAFTERS PER STRUCT.
R-38 INSULATION ASSY NON-VENTED SEE SHEETS A-0.2 FOR ENERGY

ROOF ASSEMBLY 2
COMPOSITION SHINGLE - 50 YR.
WEATHER PROOFING MEMBRANE
5/8" CDX PLYWOOD - SEE STRUCT.
RAFTERS PER STRUCT.
R-38 INSULATION ASSY NON-VENTED SEE SHEETS A-0.2 FOR ENERGY
5/8" SHEET ROCK

FLOOR ASSEMBLY 5 (OVER GARAGE)
1-1/2" GYPCRETE W/ RADIANT TUBE
1-1/8" T&G PLYWOOD PER STRUCT.
TJI'S PER STRUCT.
FLOOR INSULATOR: R-38
5/8" GWB

RF ARCHITECTURE
PH: (253) 359-4039
RICHARD@RFARCHITECTURE.COM
7421 214TH AVE E BONNEYLAKE, WA 98391

6080
REGISTERED ARCHITECT
RICHARD W. FLAKE
STATE OF WASHINGTON

All drawings, specifications, plans, ideas, arrangements, and designs represented or referred to are the property of and owned by Richard Flake Architect in whether the project for which they are made is executed or not. They were created, evolved, developed and produced for sole use on and in connection with this project and none of the above may be disclosed or given to or used by any person, firm, or corporation for any use or purpose whatsoever including any other project, except upon written permission of Richard Flake Architect.

Copyright 2023
Richard Flake Architect

MURRAY RESIDENCE
NEW SINGLE FAMILY RESIDENCE
4 MERCER ISLAND, WA 98040

DESIGN: RWF
DRAWN:
HAVILAND CONSULTING
CHECKED: RWF
REVISIONS:
1 PER CITY REVIEW 10.22.2023
REVISIONS
2 PER CITY REVIEW 8.4.2023
REVISIONS

September 15, 2023

A-7.3

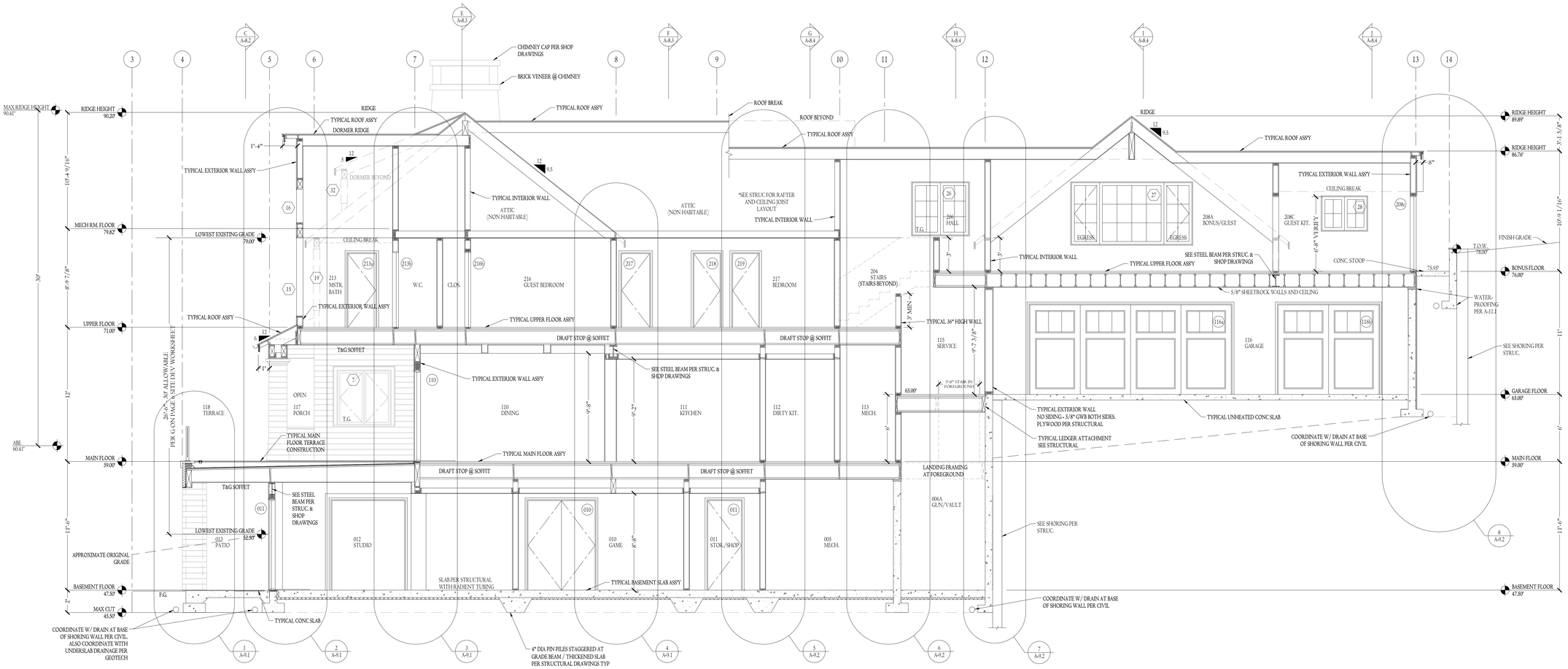

A BUILDING SECTION
SCALE: 1/4" = 1'-0"

ROOF
50-YEAR COMP. SHINGLE ROOFING
2X8 CEDAR FASCIA / 2X10 CEDAR RAKE W/ 2-1/4" BRICK MOULD W/ PRE-FINISHED ALUMINUM DRIP METAL
1/2X4 CEDAR SOFFIT W/ 2" CONT. SCREENED SOFFIT VENT

WALL (PER EACH EXTERIOR ELEVATION)
#1 PRE-STAINED SAWN CEDAR SHINGLES W/ MAXIMUM 6" EXPOSURE O/ MESH RAIN SCREEN O/ VAPROSHIELD BREATHABLE MEMBRANE O/ 1/2" CDX PLYWOOD

COORDINATE ALL SILLS, WALL SKIRT WEEP FLASHING & COLUMN SKIRT FLASHING TERMINATIONS W/ APPROVED PRE-FINISHED PAN & BASE FLASHING DETAILS PER SHOP DRAWINGS

PER EXTERIOR ELEVATIONS & WALL SECTIONS, SEE CONSTRUCTION DETAILS OF SWOOPED SHINGLE WALLS. SWOOPS TO BE CONSTRUCTED OF 2X PT RIPPED STUDS AT 16" O.C. MAX & THE CELLS FILLED SOLID W/ SPRAY FOAM W/ 3/8" PT CDX PLYWOOD. SOLID BLOCK AT BOTTOM W/ PRE-FINISHED ALUMINUM SKIRT FLASHING.

BRICK VENEER INSTALLED PER IRC & MANUF. RECOMMENDATIONS O/ AIR SPACE/MESH RAIN SCREEN W/ WEEPS - AND DRIP METAL AT BOTTOM. TO BE INSTALLED O/BREATHABLE VAPROSHIELD WATERPROOF MEMBRANE O/ PRESSURE TREATED 1/2" CDX PLYWOOD (REFER TO COORDINATION W/ WATERPROOFING DETAILS PER SHEET A-11.1

KOLBE——ULTRA SERIES CLAD DOORS & WINDOWS W/ FACTORY SUPPLIED PRE-FINISHED ALUMINUM BACKBAND TRIM. COORDINATE W/ SIDING FOR WATERPROOFING DETAILS & Z-FLASHING AT HEAD REQUIREMENTS. SEQUENCING CRITICAL AT HEADS & W/ COORDINATION AT DOOR PAN INSTALLATIONS.

WOOD SILL CAPS AT COVERED PORCHES TO BE 2X PRE-FINISHED CEDAR O/ WATERPROOF MEMBRANE W/ 1X CEDAR PRE-FINISHED APRON TRIM (TYPICAL AT ALL SIMILAR CONDITIONS)

FRONT PORCH COLUMNS
PRE-FINISHED METAL PAN - 4 EDGES AT TOP O/ 3X PRE- FINISHED CEDAR WOOD CAP O/ PRE-FINISHED COVE MOULD (DIMENSIONS PER SUBMITTALS) O/ PRE-FINISHED WOOD COLUMN WRAPS W/ MITERED OR BISCUITED EDGE CORNERS O/ MESH RAIN SCREEN O/ VAPROSHIELD WATERPROOF BREATHABLE MEMBRANE O/ 1/2" CDX PLYWOOD O/ WOOD FRAMING PER STRUCTURAL.

MAIN FLOOR TERRACE CONSTRUCTION
TEMPERED 3/8" THICK GLASS PANEL & PRE-FINISHED ALUMINUM STANCHIONS - CAPLESS GUARDRAIL PER APPROVED SHOP DRAWINGS O/ PRE-CAST CONCRETE SILL/WALL CAP PER ELEVATIONS & SHOP DRAWINGS (COORDINATE W/ DETAILS AT SLOPED WATERPROOF DECK & PRE-CAST - STONE VENEER PAVER SYSTEM O/ BISON ADJUSTABLE STANDS PER APPROVED SHOP DRAWINGS (COORDINATE W/ WATERPROOF DECK SHOP DRAWINGS & APPROVED DECK DRAIN LOCATIONS. ALSO COORDINATE LOCATIONS PER CIVIL DRAWINGS)

CHIMNEY CAPS
PRE-FINISHED CHIMNEY CAPS & RANGE HOOD BLOWER CAPS - SEE APPROVED SHOP DRAWINGS FOR WATERPROOF PANS / FLUES / CAP INSTALLATION REQUIREMENTS TO ENSURE WATERPROOFING INTEGRITY.

TYPICAL INTERIOR WALL
5/8" GWB @ EACH SIDE
1/2" CDX PLYWOOD PER STRUC. PLANS
2X6/2X4 STUDS @ 16" O.C. TYP U.N.O. PER STRC
SOUND INSULATION
2-2X PT SILL W/ A BOLTS PER STRUC & VERIFY HOLD DOWNS @ EACH END OF REQUIRED
*VERIFY LOAD BEARING

TYPICAL EXTERIOR WALL
SIDING MATERIALS PER ELEVATIONS & EXTERIOR MATERIALS LIST.
RAINSCREEN MESH O/ VAPROSHIELD WEATHERPROOF BREATHABLE MEMBRANE O/
1/2" CDX PLYWOOD - SEE STRUCT.
2X6 STUDS @ 16" O.C. TYP U.N.O.
R-25 INSULATION ASSY PER SHEET A-0.2
5/8" SHEETROCK

ROOF ASSEMBLY 1 (NON VENTED ROOF)
COMPOSITION SHINGLE - 50 YR
WEATHER PROOFING MEMBRANE.
5/8" CDX PLYWOOD - SEE STRUCT.
RAFTERS PER STRUCT.
R-38 INSULATION ASSY NON-VENTED
SEE SHEETS A-0.2 FOR ENERGY

ROOF ASSEMBLY 2 (NON VENTED ROOF)
COMPOSITION SHINGLE - 50 YR
WEATHER PROOFING MEMBRANE.
5/8" CDX PLYWOOD - SEE STRUCT.
RAFTERS PER STRUCT.
R-38 INSULATION ASSY NON-VENTED
SEE SHEETS A-0.2 FOR ENERGY
5/8" SHEET ROCK (VERIFY LOCATION)

TYPICAL FLOOR ASSEMBLY
1-1/2" GYPCRETE W/ RADIANT TUBE
1-1/8" T&G PLYWOOD PER STRUCT.
TJI'S PER STRUCT.
FLOOR INSULATOR: R-38
5/8" GWB

TYPICAL BASEMENT SLAB
8" THICK CONC W/ RADIANT TUBE
BOILER HEATING SYSTEM / TIED TO STRUCTURAL REBAR. SEE STRUCTURAL FOR DIAMETER REBAR & SPACING O/
R-10 RIGID INSULATION @ ALL O/ 10 MIL VAPOR BARRIER O/ COMPACT GRANULAR FILL O/ SUB-SLAB DRAINAGE SYSTEM.
PER GEOTECH DETAILS & NOTES. COORDINATE W/ CIVIL

RF ARCHITECTURE
PH: (253)359-4039
RICHARD@RFARCHITECTURE.COM
7421 214TH AVE E BONNEYLAKE, WA 98391

6080
REGISTERED ARCHITECT
RICHARD W. FLAKE
STATE OF WASHINGTON

All drawings, specifications, plans, ideas, arrangements, and designs represented or referred to are the property of and owned by Richard Flake Architect in whether the project for which they are made is executed or not. They were created, evolved, developed and produced for sole use on and in connection with this project and none of the above may be disclosed or given to or used by any person, firm, or corporation for any use or purpose whatsoever including any other project, except upon written permission of Richard Flake Architect.

Copyright 2023
Richard Flake Architect

MURRAY RESIDENCE
NEW SINGLE FAMILY RESIDENCE
SILVER LAKE
SW 4TH PLACE
SNOHOMISH, WA 98290

DESIGN: RWF
DRAWN: HAVILAND CONSULTING
CHECKED: RWF
REVISIONS:
PER CITY REVIEW 10.22.2021
REVISIONS
PER CITY REVIEW 4.8.2023
REVISIONS

September 15, 2023

A-8.1

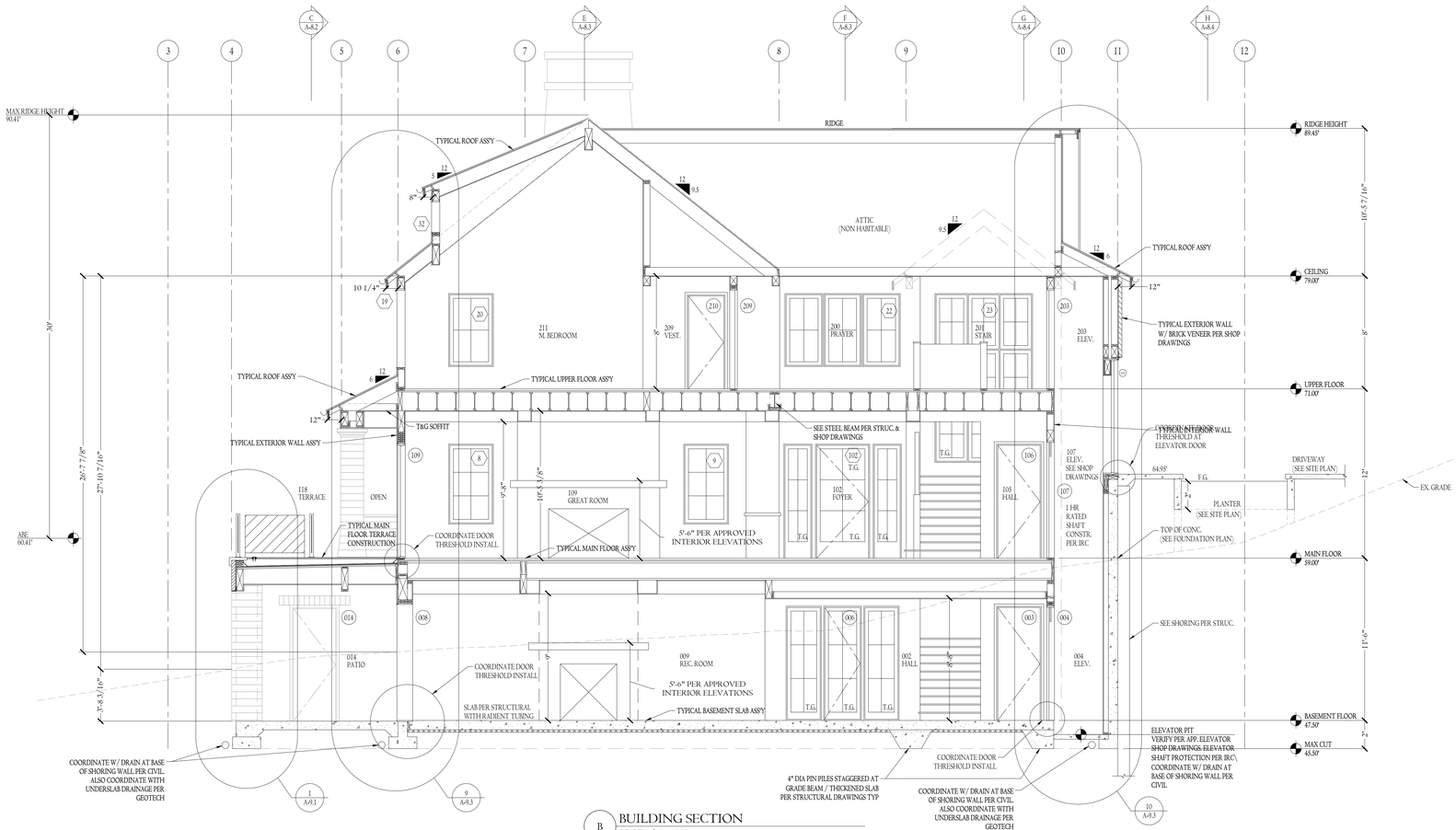

B BUILDING SECTION
SCALE: 1/4" = 1'-0"

NOT ISSUED YET:
BUILDING SECTION C TO BE ISSUED
WITH WATERPROOF DECK DRAWINGS

C BUILDING SECTION
SCALE: 1/4" = 1'-0"

ROOF
50-YEAR COMP. SHINGLE ROOFING
2X8 CEDAR FASCIA / 2X10 CEDAR RAKE W/ 2-1/4" BRICK MOULD W/ PRE-FINISHED ALUMINUM DRIP METAL
1/2X4 CEDAR SOFFIT W/ 2" CONT. SCREENED SOFFIT VENT

WALL (PER EACH EXTERIOR ELEVATION)
#1 PRE-STAINED SAWN CEDAR SHINGLES W/ MAXIMUM 6" EXPOSURE O/ MESH RAIN SCREEN O/ VAPROSHIELD BREATHABLE MEMBRANE O/ 1/2" CDX PLYWOOD

COORDINATE ALL SILLS, WALL SKIRT WEEP FLASHING & COLUMN SKIRT FLASHING TERMINATIONS W/ APPROVED PRE-FINISHED PAN & BASE FLASHING DETAILS PER SHOP DRAWINGS

PER EXTERIOR ELEVATIONS & WALL SECTIONS, SEE CONSTRUCTION DETAILS OF SWOOPED SHINGLE WALLS. SWOOPS TO BE CONSTRUCTED OF 2X PT RIPPED STUDS AT 16" O.C. MAX & THE CELLS FILLED SOLID W/ SPRAY FOAM W/ 3/8" PT CDX PLYWOOD. SOLID BLOCK AT BOTTOM W/ PRE-FINISHED ALUMINUM SKIRT FLASHING.

BRICK VENEER INSTALLED PER IRC & MANUF. RECOMMENDATIONS O/ AIR SPACE/MESH RAIN SCREEN W/ WEEPS - AND DRIP METAL AT BOTTOM. TO BE INSTALLED O/BREATHABLE VAPROSHIELD WATERPROOF MEMBRANE O/ PRESSURE TREATED 1/2" CDX PLYWOOD (REFER TO COORDINATION W/ WATERPROOFING DETAILS PER SHEET A-11.1

KOLBE.....ULTRA SERIES CLAD DOORS & WINDOWS W/ FACTORY SUPPLIED PRE-FINISHED ALUMINUM BACKBAND TRIM. COORDINATE W/ SIDING FOR WATERPROOFING DETAILS & Z-FLASHING AT HEAD REQUIREMENTS. SEQUENCING CRITICAL AT HEADS & W/ COORDINATION AT DOOR PAN INSTALLATIONS.

WOOD SILL CAPS AT COVERED PORCHES TO BE 2X PRE-FINISHED CEDAR O/ WATERPROOF MEMBRANE W/ 1X CEDAR PRE-FINISHED APRON TRIM (TYPICAL AT ALL SIMILAR CONDITIONS)

FRONT PORCH COLUMNS
PRE-FINISHED METAL PAN - 4 EDGES AT TOP O/ 3X PRE- FINISHED CEDAR WOOD CAP O/ PRE-FINISHED COVE MOULD (DIMENSIONS PER SUBMITTALS) O/ PRE-FINISHED WOOD COLUMN WRAPS W/ MITERED OR BISCUITED EDGE CORNERS O/ MESH RAIN SCREEN O/ VAPROSHIELD WATERPROOF BREATHABLE MEMBRANE O/ 1/2" CDX PLYWOOD O/ WOOD FRAMING PER STRUCTURAL.

MAIN FLOOR TERRACE CONSTRUCTION
TEMPERED 3/8" THICK GLASS PANEL & PRE-FINISHED ALUMINUM STANCHIONS - CAPLESS GUARDRAIL PER APPROVED SHOP DRAWINGS O/ PRE-CAST CONCRETE SILL/WALL CAP PER ELEVATIONS & SHOP DRAWINGS. (COORDINATE W/ DETAILS AT SLOPED WATERPROOF DECK & PRE-CAST - STONE VENEER PAVER SYSTEM O/ BISON ADJUSTABLE STANDS PER APPROVED SHOP DRAWINGS (COORDINATE W/ WATERPROOF DECK, SHOP DRAWINGS & APPROVED DECK DRAIN LOCATIONS. ALSO COORDINATE LOCATIONS PER CIVIL DRAWINGS)

CHIMNEY CAPS
PRE-FINISHED CHIMNEY CAPS & RANGE HOOD BLOWER CAPS - SEE APPROVED SHOP DRAWINGS FOR WATERPROOF PANS / FLUES / CAP INSTALLATION REQUIREMENTS TO ENSURE WATERPROOFING INTEGRITY.

TYPICAL INTERIOR WALL
5/8" GWB @ EACH SIDE
1/2" CDX PLYWOOD PER STRUC. PLANS
2X6/2X4 STUDS @ 16" O.C. TYP U.N.O. PER STRC
SOUND INSULATION
2-2X PT SILL W/ A BOLTS PER STRUC & VERIFY HOLD DOWNS @ EACH END OF REQUIRED
*VERIFY LOAD BEARING

TYPICAL EXTERIOR WALL
SIDING MATERIALS PER ELEVATIONS & EXTERIOR MATERIALS LIST.
RAINSCREEN MESH O/ VAPROSHIELD WEATHERPROOF BREATHABLE MEMBRANE O/
1/2" CDX PLYWOOD - SEE STRUCT.
2X6 STUDS @ 16" O.C. TYP U.N.O.
R-25 INSULATION ASS'Y PER SHEET A-0.2
5/8" SHEETROCK

ROOF ASSEMBLY 1 (NON VENTED ROOF)
COMPOSITION SHINGLE - 50 YR
WEATHER PROOFING MEMBRANE
5/8" CDX PLYWOOD - SEE STRUCT.
RAFTERS PER STRUCT.
R-38 INSULATION ASS'Y NON-VENTED
SEE SHEETS A-0.2 FOR ENERGY

ROOF ASSEMBLY 2 (NON VENTED ROOF)
COMPOSITION SHINGLE - 50 YR
WEATHER PROOFING MEMBRANE
5/8" CDX PLYWOOD - SEE STRUCT.
RAFTERS PER STRUCT.
R-38 INSULATION ASS'Y NON-VENTED
SEE SHEETS A-0.2 FOR ENERGY
5/8" SHEET ROCK (VERIFY LOCATION)

TYPICAL FLOOR ASSEMBLY
1-1/2" GYPCRETE W/ RADIANT TUBE
1-1/8" T&G PLYWOOD PER STRUCT.
TJI'S PER STRUCT.
FLOOR INSULATOR: R-38
5/8" GWB

TYPICAL BASEMENT SLAB
8" THICK CONC W/ RADIANT TUBE
BOILER HEATING SYSTEM / TIED TO STRUCTURAL REBAR. SEE STRUCTURAL FOR DIAMETER REBAR & SPACING O/
R-10 RIGID INSULATION @ ALL O/ 10 MIL VAPOR BARRIER O/ COMPACT GRANULAR FILL O/ SUB-SLAB DRAINAGE SYSTEM.
PER GEOTECH DETAILS & NOTES. COORDINATE W/ CIVIL

RF ARCHITECTURE
PH: (253)359-4039
RICHARD@RFARCHITECTURE.COM
7421 214TH AVE E BONNEYLAKE, WA 98391

6080
REGISTERED ARCHITECT
RICHARD W. FLAKE
STATE OF WASHINGTON

All drawings, specifications, plans, ideas, arrangements, and designs represented or referred to are the property of and owned by Richard Flake Architect whether the project for which they are made is executed or not. They were created, evolved, developed and produced for sole use on and in connection with this project and none of the above may be disclosed or given to or used by any person, firm, or corporation for any use or purpose whatsoever including any other project, except upon written permission of Richard Flake Architect.

Copyright 2023
Richard Flake Architect

MURRAY RESIDENCE
NEW SINGLE FAMILY RESIDENCE
MERCER ISLAND, WA

DESIGN: RWF
DRAWN:
HAVILAND CONSULTING
CHECKED: RWF
REVISIONS:
1 PER CITY REVIEW 10-22-2021
REVISIONS
2 PER CITY REVIEW 9-8-2023
REVISIONS

September 15, 2023

A-8.2

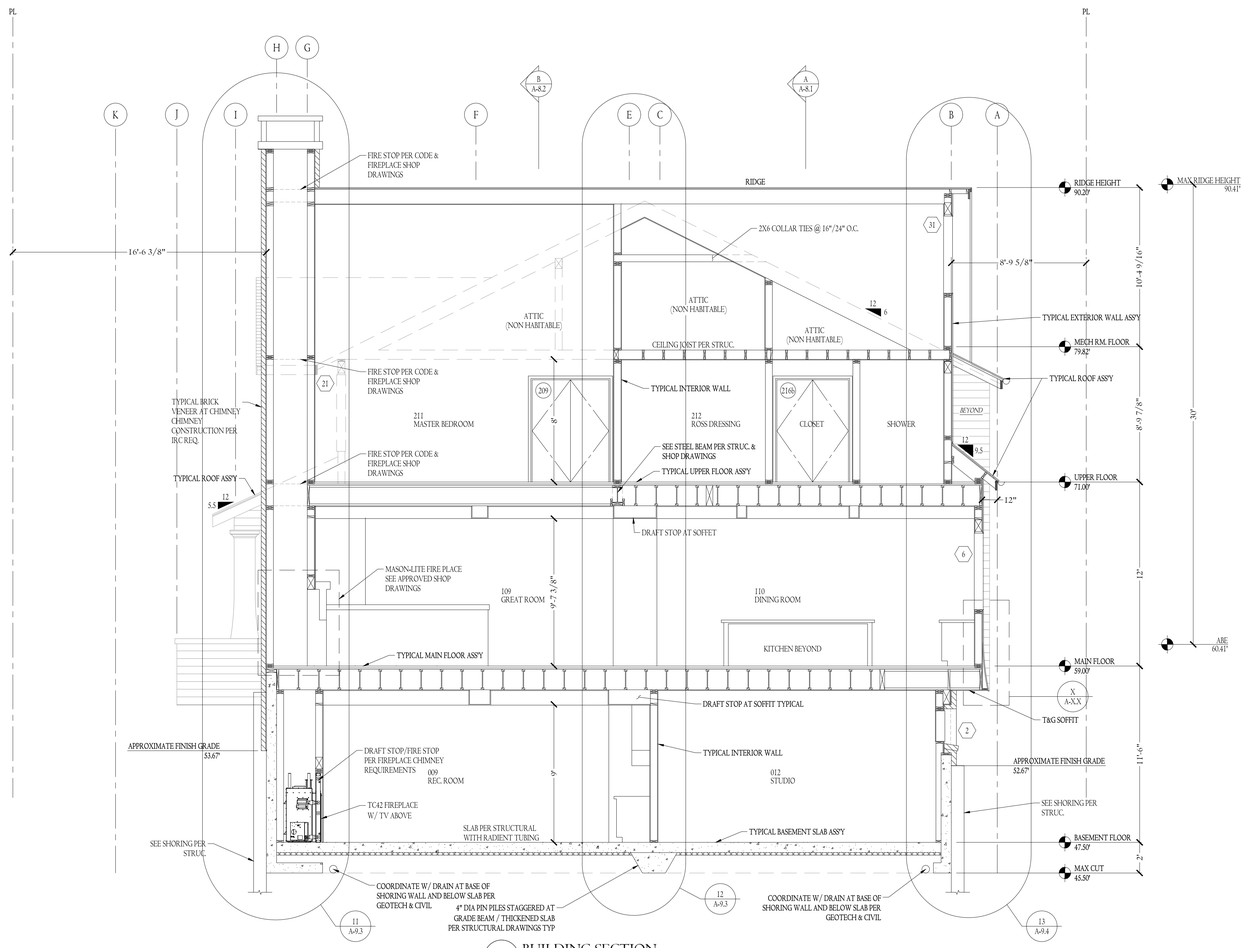

E BUILDING SECTION

SCALE: 1/4" = 1'-0"

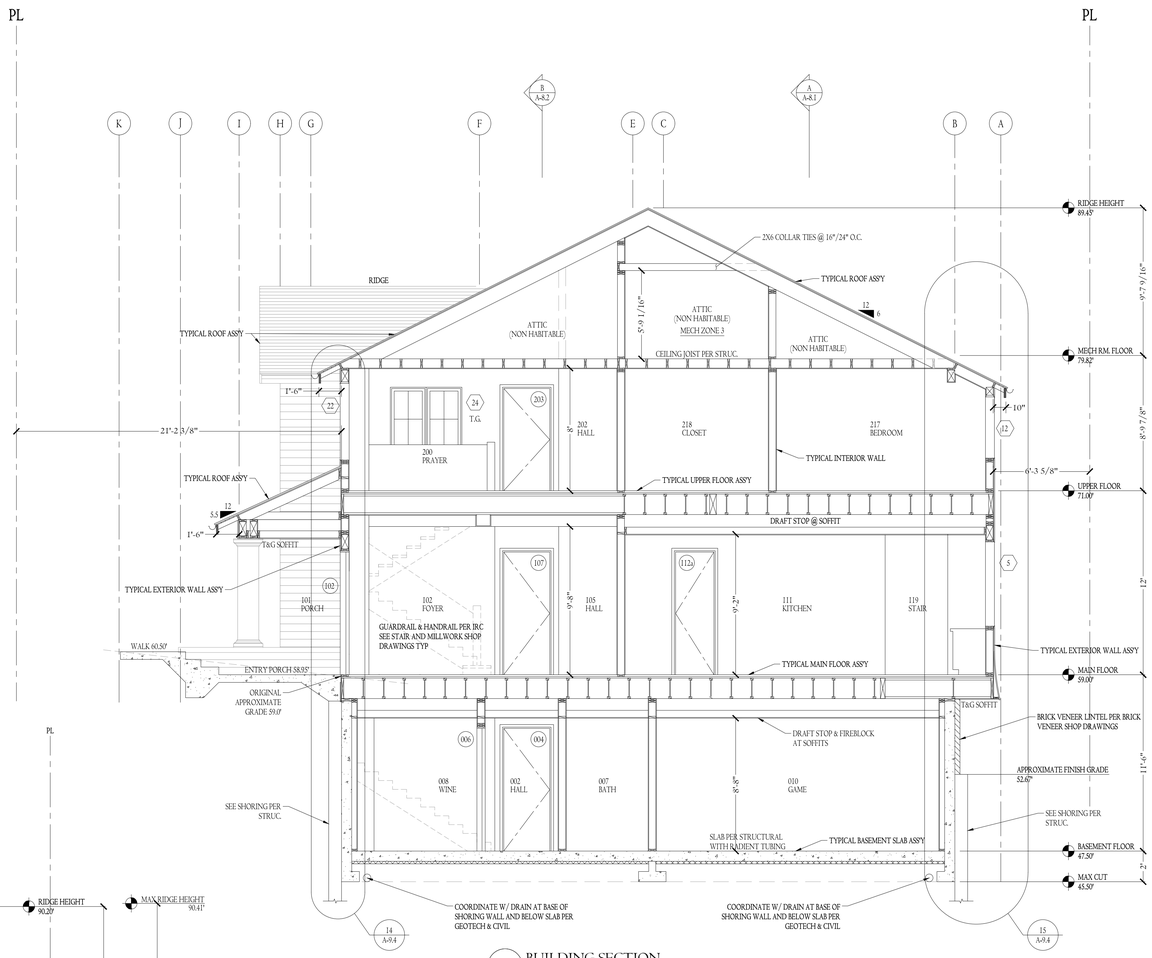

F BUILDING SECTION

SCALE: 1/4" = 1'-0"

ROOF
SAYEAR COMP. SHINGLE ROOFING
2X8 CEDAR FASCIA / 2X10 CEDAR RAKE W/ 2-1/4" BRICK MOULD W/ PRE-FINISHED ALUMINUM DRIP METAL
1/2X4 CEDAR SOFFIT W/ 2" CONT. SCREENED SOFFIT VENT

WALL (TER EACH EXTERIOR ELEVATION)
#1 PRE-STAINED SAWN CEDAR SHINGLES W/ MAXIMUM 6" EXPOSURE O/ MESH RAIN SCREEN O/ VAPROSHIELD BREATHABLE MEMBRANE O/ 1/2" CDX PLYWOOD

COORDINATE ALL SILLS, WALL SKIRT W/EP FLASHING & COLUMN SKIRT FLASHING TERMINATIONS W/ APPROVED PRE-FINISHED PAN & BASE FLASHING DETAILS PER SHOP DRAWINGS

PER EXTERIOR ELEVATIONS & WALL SECTIONS, SEE CONSTRUCTION DETAILS OF SWOOPED SHINGLE WALLS. SWOOPS TO BE CONSTRUCTED OF 2X PT RIPPED STUDS AT 16" O.C. MAX & THE CELLS FILLED SOLID W/ SPRAY FOAM W/ 3/4" PT CDX PLYWOOD. SOLID BLOCK AT BOTTOM W/ PRE-FINISHED ALUMINUM SKIRT FLASHING.

BRICK VENEER INSTALLED PER IRC & MANUF. RECOMMENDATIONS O/ AIR SPACE/MESH RAIN SCREEN W/ WEEPS - AND DRIP METAL AT BOTTOM. TO BE INSTALLED O/BREATHABLE VAPROSHIELD WATERPROOF MEMBRANE O/ PRESSURE TREATED 1/2" CDX PLYWOOD. (REFER TO COORDINATION W/ WATERPROOFING DETAILS PER SHEET A-11.1

KOLBE——ULTRA SERIES CLAD DOORS & WINDOWS W/ FACTORY SUPPLIED PRE-FINISHED ALUMINUM BACKBAND TRIM. COORDINATE W/ SIDING FOR WATERPROOFING DETAILS & Z-FLASHING AT HEAD REQUIREMENTS. SEQUENCING CRITICAL AT HEADS & W/ COORDINATION AT DOOR PAN INSTALLATIONS.

WOOD SILL CAPS AT COVERED PORCHES TO BE 2X PRE-FINISHED CEDAR O/ WATERPROOF MEMBRANE W/ 1X CEDAR PRE-FINISHED APRON TRIM (TYPICAL AT ALL SIMILAR CONDITIONS)

FRONT PORCH COLUMNS
PRE-FINISHED METAL PAN - 4 EDGES AT TOP O/ 3X PRE- FINISHED CEDAR WOOD CAP O/ PRE-FINISHED COVE MOULD (DIMENSIONS PER SUBMITTALS) O/ PRE-FINISHED WOOD COLUMN WRAPS W/ MITERED OR, BISCUITED EDGE
CORNERS O/ MESH RAIN SCREEN O/ VAPROSHIELD WATERPROOF BREATHABLE MEMBRANE O/ 1/2" CDX PLYWOOD O/ WOOD FRAMING PER STRUCTURAL.

MAIN FLOOR TERRACE CONSTRUCTION
TEMPERED 3/8" THICK GLASS PANEL & PRE-FINISHED ALUMINUM STANCHIONS - CAPLESS GUARDRAIL PER APPROVED SHOP DRAWINGS O/ PRE-CAST CONCRETE SILL/ WALL CAP PER ELEVATIONS & SHOP DRAWINGS. (COORDINATE W/ DETAILS AT SLOPED WATERPROOF DECK & PRE-CAST - STONE VENEER PAVER SYSTEM O/ BISON ADJUSTABLE STANDS PER APPROVED SHOP DRAWINGS (COORDINATE W/ WATERPROOF DECK SHOP DRAWINGS & APPROVED DECK DRAIN LOCATIONS. ALSO COORDINATE LOCATIONS PER CIVIL DRAWINGS)

CHIMNEY CAPS
PRE-FINISHED CHIMNEY CAPS & RANGE HOOD BLOWER CAPS - SEE APPROVED SHOP DRAWINGS FOR WATERPROOF PANS / FLUES / CAP INSTALLATION REQUIREMENTS TO ENSURE WATERPROOFING INTEGRITY.

TYPICAL INTERIOR WALL
5/8" GWB @ EACH SIDE
1/2" CDX PLYWOOD PER STRUC. PLANS
2X6/2X4 STUDS @ 16" O.C. TYP U.N.O. PER STRC
SOUND INSULATION
2-2X PT SILL W/ A BOLTS PER STRUC & VERIFY HOLD DOWNS @ EACH END OF REQUIRED
*VERIFY LOAD BEARING

TYPICAL EXTERIOR WALL
SIDING MATERIALS PER ELEVATIONS & EXTERIOR MATERIALS LIST.
RAINSCREEN MESH O/ VAPROSHIELD WEATHERPROOF BREATHABLE MEMBRANE O/
1/2" CDX PLYWOOD - SEE STRUCT.
2X6 STUDS @ 16" O.C. TYP U.N.O.
R-25 INSULATION ASSY PER SHEET A-0.2
5/8" SHEETROCK

ROOF ASSEMBLY 1 (NON VENTED ROOF)
COMPOSITION SHINGLE - 50 YR
WEATHER PROOFING MEMBRANE.
5/8" CDX PLYWOOD - SEE STRUCT.
RAFTERS PER STRUCT.
R-38 INSULATION ASSY NON-VENTED
SEE SHEETS A-0.2 FOR ENERGY

ROOF ASSEMBLY 2 (NON VENTED ROOF)
COMPOSITION SHINGLE - 50 YR
WEATHER PROOFING MEMBRANE.
5/8" CDX PLYWOOD - SEE STRUCT.
RAFTERS PER STRUCT.
R-38 INSULATION ASSY NON-VENTED
SEE SHEETS A-0.2 FOR ENERGY
5/8" SHEET ROCK. (VERIFY LOCATION)

TYPICAL FLOOR ASSEMBLY
1-1/2" GYPCRETE W/ RADIANT TUBE
1-1/8" T&G PLYWOOD PER STRUCT.
TJI'S PER STRUCT.
FLOOR INSULATOR; R-38
5/8" GWB

TYPICAL BASEMENT SLAB
8" THICK CONC W/ RADIANT TUBE
BOILER HEATING SYSTEM / TIED TO STRUCTURAL REBAR. SEE STRUCTURAL FOR DIAMETER REBAR & SPACING O/
R-10 RIGID INSULATION @ ALL O/ 10 MIL VAPOR BARRIER O/ COMPACT GRANULAR FILL O/ SLR&S.AB DRAINAGE SYSTEM.
PER GEOTECH DETAILS & NOTES. COORDINATE W/ CIVIL

RF ARCHITECTURE
PH: (2 5 3) 3 5 9 - 4 0 3 9
RICHARD@RFARCHITECTURE.COM
7421 214TH AVE E BONNEYLAKE, WA 98391

6080
REGISTERED ARCHITECT
RICHARD W. FLAKE
STATE OF WASHINGTON

All drawings, specifications, plans, ideas, arrangements, and designs represented or referred to are the property of and owned by Richard Flake Architect in whether the project for which they are made is executed or not. They were created, evolved, developed and produced for sole use on and in connection with this project and none of the above may be disclosed or given to or used by any person, firm, or corporation for any use or purpose whatsoever including any other project, except upon written permission of Richard Flake Architect.

Copyright 2023
Richard Flake Architect

MURRAY RESIDENCE

NEW SINGLE FAMILY RESIDENCE
4806 SOUTH 373RD PL.
AUBURN, WA

DESIGN: RWF
DRAWN: HAVILAND CONSULTING
CHECKED: RWF
REVISIONS:

1 PER CITY REVIEW 10.22.2021 REVISIONS

2 PER CITY REVIEW 8.8.2023 REVISIONS

September 15, 2023

A-8.3

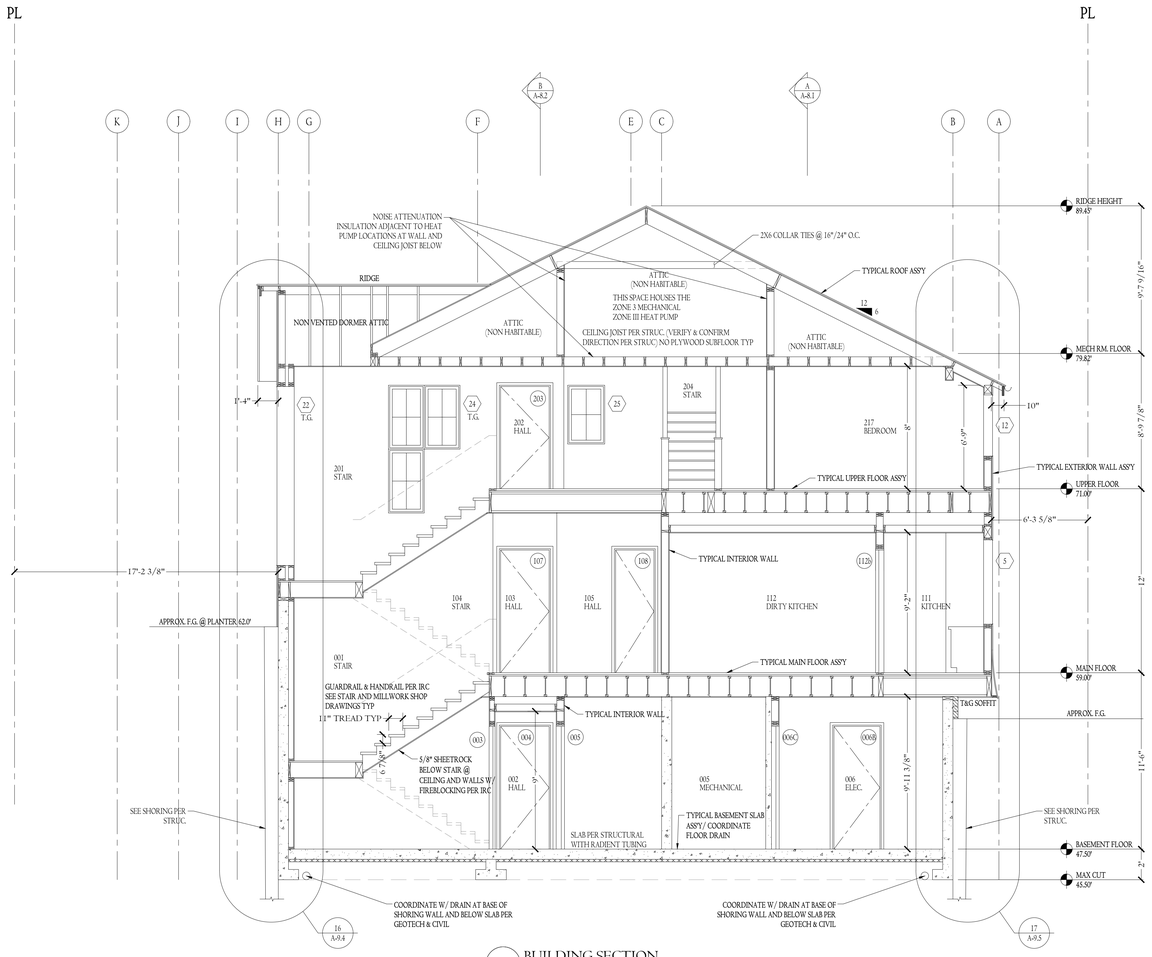

G BUILDING SECTION
SCALE: 1/4" = 1'-0"

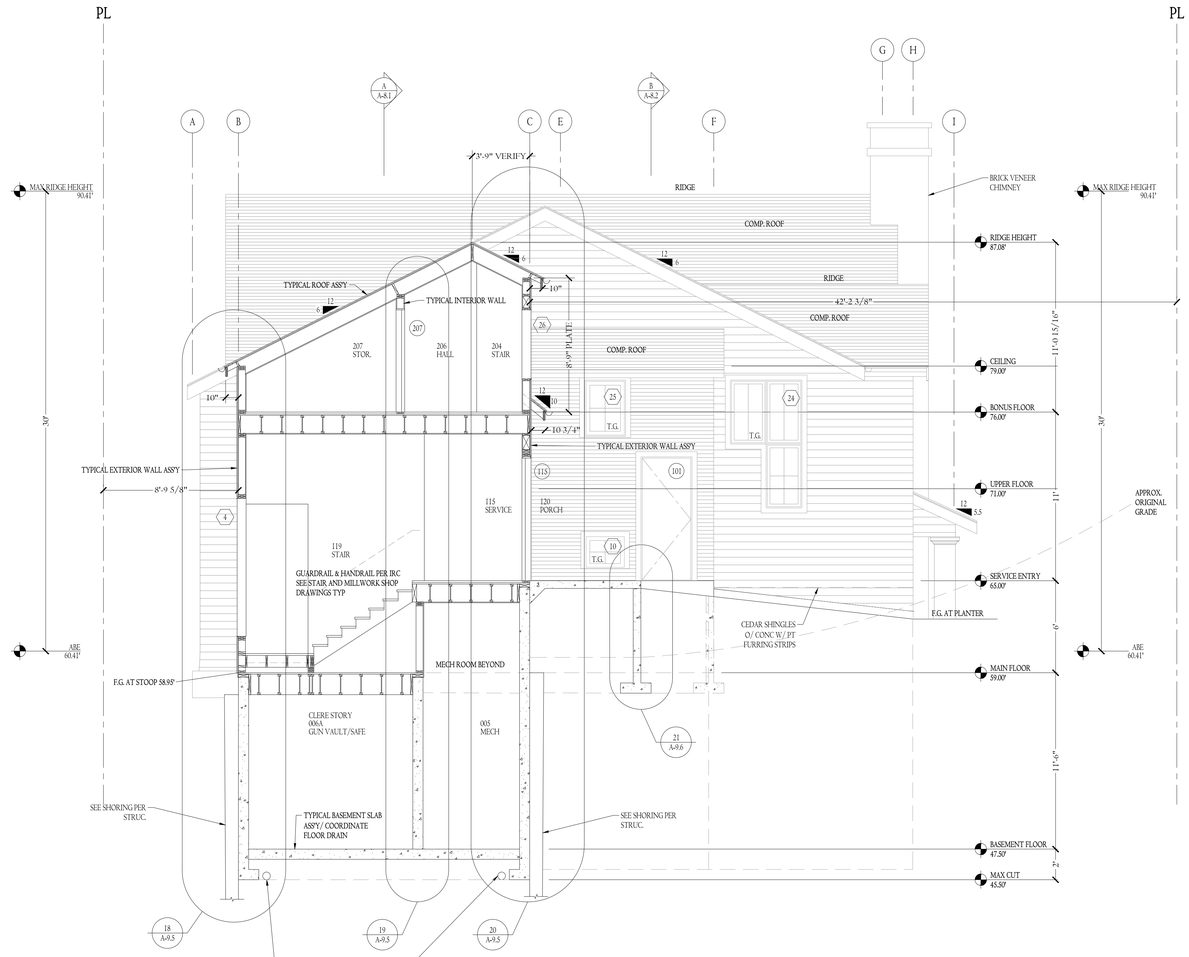

H BUILDING SECTION
SCALE: 1/4" = 1'-0"

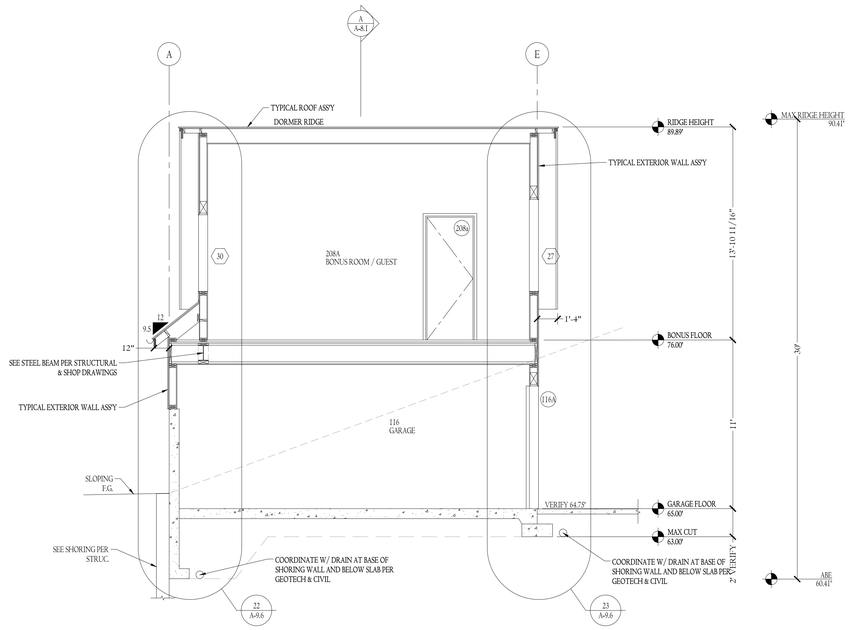

I BUILDING SECTION
SCALE: 1/4" = 1'-0"

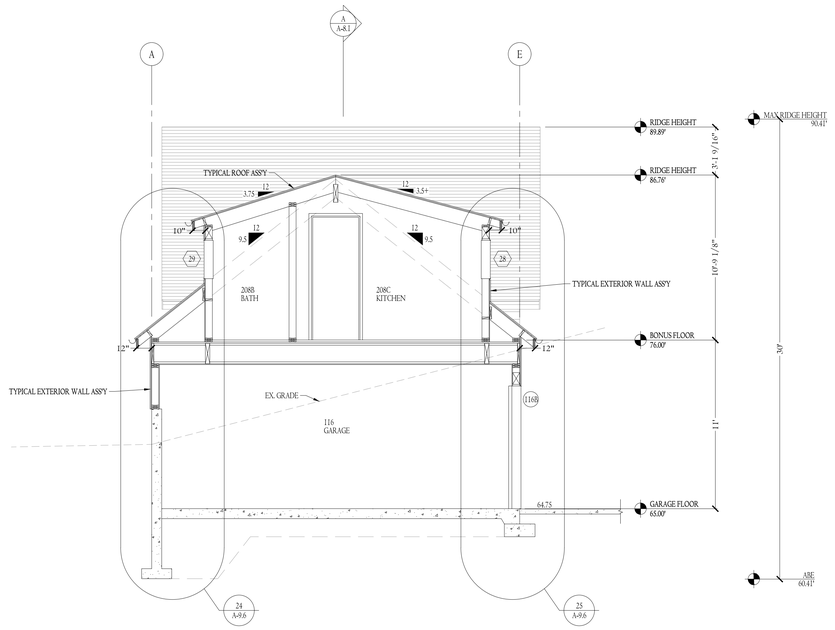

J BUILDING SECTION
SCALE: 1/4" = 1'-0"

ROOF
50-YEAR COMP. SHINGLE ROOFING
2X8 CEDAR FASCIA / 2X10 CEDAR RAKE W/ 2-1/4" BRICK MOULD W/ PRE-FINISHED ALUMINUM DRIP METAL
1/2X4 CEDAR SOFFIT W/ 2" CONT. SCREENED SOFFIT VENT

WALL (PER EACH EXTERIOR ELEVATION)
#1 PRE-STAINED SAWN CEDAR SHINGLES W/ MAXIMUM 6" EXPOSURE O/ MESH RAIN SCREEN O/ VAPROSHIELD BREATHABLE MEMBRANE O/ 1/2" CDX PLYWOOD

COORDINATE ALL SILLS, WALL SKIRT WEEP FLASHING & COLUMN SKIRT FLASHING TERMINATIONS W/ APPROVED PRE-FINISHED PAN & BASE FLASHING DETAILS PER SHOP DRAWINGS

PER EXTERIOR ELEVATIONS & WALL SECTIONS, SEE CONSTRUCTION DETAILS OF SWOOPED SHINGLE WALLS. SWOOPS TO BE CONSTRUCTED OF 2X PT RIPPED STUDS AT 16" O.C. MAX & THE CELLS FILLED SOLID W/ SPRAY FOAM W/ 3/8" PT CDX PLYWOOD. SOLID BLOCK AT BOTTOM W/ PRE-FINISHED ALUMINUM SKIRT FLASHING.

BRICK VENEER INSTALLED PER IRC & MANUF. RECOMMENDATIONS O/ AIR SPACE/MESH RAIN SCREEN W/ WEEPS - AND DRIP METAL AT BOTTOM. TO BE INSTALLED O/ BREATHABLE VAPROSHIELD WATERPROOF MEMBRANE O/ PRESSURE TREATED 1/2" CDX PLYWOOD (REFER TO COORDINATION W/ WATERPROOFING DETAILS PER SHEET A-11.1

KOLBE——ULTRA SERIES CLAD DOORS & WINDOWS W/ FACTORY SUPPLIED PRE-FINISHED ALUMINUM BACKBAND TRIM. COORDINATE W/ SIDING FOR WATERPROOFING DETAILS & Z-FLASHING AT HEAD REQUIREMENTS. SEQUENCING CRITICAL AT HEADS & W/ COORDINATION AT DOOR PAN INSTALLATIONS.

WOOD SILL CAPS AT COVERED PORCHES TO BE 2X PRE-FINISHED CEDAR O/ WATERPROOF MEMBRANE W/ 1X CEDAR PRE-FINISHED APRON TRIM (TYPICAL AT ALL SIMILAR CONDITIONS)

FRONT PORCH COLUMNS
PRE-FINISHED METAL PAN - 4 EDGES AT TOP O/ 3X PRE- FINISHED CEDAR WOOD CAP O/ PRE-FINISHED COVE MOULD (DIMENSIONS PER SUBMITTALS) O/ PRE-FINISHED WOOD COLUMN WRAPS W/ MITERED OR BISCUITED EDGE CORNERS O/ MESH RAIN SCREEN O/ VAPROSHIELD WATERPROOF BREATHABLE MEMBRANE O/ 1/2" CDX PLYWOOD O/ WOOD FRAMING PER STRUCTURAL.

MAIN FLOOR TERRACE CONSTRUCTION
TEMPERED 3/8" THICK GLASS PANEL & PRE-FINISHED ALUMINUM STANCHIONS - CAPLESS GUARDRAIL PER APPROVED SHOP DRAWINGS O/ PRE-CAST CONCRETE SILL/WALL CAP PER ELEVATIONS & SHOP DRAWINGS. (COORDINATE W/ DETAILS AT SLOPED WATERPROOF DECK & PRE-CAST - STONE VENEER PAVER SYSTEM O/ BISON ADJUSTABLE STANDS PER APPROVED SHOP DRAWINGS (COORDINATE W/ WATERPROOF DECK SHOP DRAWINGS & APPROVED DECK DRAIN LOCATIONS. ALSO COORDINATE LOCATIONS PER CIVIL DRAWINGS)

CHIMNEY CAPS
PRE-FINISHED CHIMNEY CAPS & RANGE HOOD BLOWER CAPS - SEE APPROVED SHOP DRAWINGS FOR WATERPROOF PANS / FLUES / CAP INSTALLATION REQUIREMENTS TO ENSURE WATERPROOFING INTEGRITY.

TYPICAL INTERIOR WALL
5/8" GWB @ EACH SIDE
1/2" CDX PLYWOOD PER STRUC. PLANS
2X6/2X4 STUDS @ 16" O.C. TYP U.N.O. PER STRC
SOUND INSULATION
2-2X PT SILL W/ A BOLTS PER STRUC & VERIFY HOLD DOWNS @ EACH END OF REQUIRED
*VERIFY LOAD BEARING

TYPICAL EXTERIOR WALL
SIDING MATERIALS PER ELEVATIONS & EXTERIOR MATERIALS LIST.
RAINSCREEN MESH O/ VAPROSHIELD WEATHERPROOF BREATHABLE MEMBRANE O/
1/2" CDX PLYWOOD - SEE STRUCT.
2X6 STUDS @ 16" O.C. TYP U.N.O.
R-25 INSULATION ASSY PER SHEET A-0.2
5/8" SHEETROCK

ROOF ASSEMBLY 1 (NON VENTED ROOF)
COMPOSITION SHINGLE - 50 YR
WEATHER PROOFING MEMBRANE.
5/8" CDX PLYWOOD - SEE STRUCT.
RAFTERS PER STRUCT.
R-38 INSULATION ASSY NON-VENTED SEE SHEETS A-0.2 FOR ENERGY

ROOF ASSEMBLY 2 (NON VENTED ROOF)
COMPOSITION SHINGLE - 50 YR
WEATHER PROOFING MEMBRANE.
5/8" CDX PLYWOOD - SEE STRUCT.
RAFTERS PER STRUCT.
R-38 INSULATION ASSY NON-VENTED SEE SHEETS A-0.2 FOR ENERGY
5/8" SHEET ROCK. (VERIFY LOCATION)

TYPICAL FLOOR ASSEMBLY
1-1/2" GYPCRETE W/ RADIANT TUBE
1-/8" T&G PLYWOOD PER STRUCT.
TJIS PER STRUCT.
FLOOR INSULATOR: R-38
5/8" GWB

TYPICAL BASEMENT SLAB
8" THICK CONC. W/ RADIANT TUBE
BOILER HEATING SYSTEM / TIED TO STRUCTURAL REBAR. SEE STRUCTURAL FOR DIAMETER REBAR & SPACING O/
R-10 RIGID INSULATION @ ALL O/ 10 MIL VAPOR BARRIER O/ COMPACT GRANULAR FILL O/ SUB-SLAB DRAINAGE SYSTEM.
PER GEOTECH DETAILS & NOTES. COORDINATE W/ CIVIL

RF ARCHITECTURE
PH: (2 5 3) 3 5 9 - 4 0 3 9
RICHARD@RFARCHITECTURE.COM
7421 214TH AVE E BONNEYLAKE, WA 98391

6080
REGISTERED ARCHITECT
RICHARD W. FLAKE
STATE OF WASHINGTON

All drawings, specifications, plans, ideas, arrangements, and designs represented or referred to are the property of and owned by Richard Flake Architect whether the project for which they are made is executed or not. They were created, evolved, developed and produced for sole use on and in connection with this project and none of the above may be disclosed or given to or used by any person, firm, or corporation for any use or purpose whatsoever including any other project, except upon written permission of Richard Flake Architect.

Copyright 2023
Richard Flake Architect

MURRAY RESIDENCE

NEW SINGLE FAMILY RESIDENCE
MERCER ISLAND, WA 98040

DESIGN: RWF
DRAWN: HAVILAND CONSULTING
CHECKED: RWF
REVISIONS:
1 PER CITY REVIEW 10-22-2021
REVISIONS
2 PER CITY REVIEW 8-8-2023
REVISIONS

September 15, 2023

A-8.4

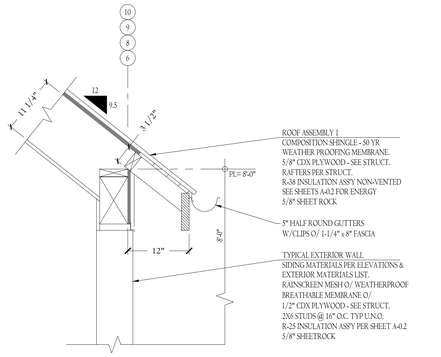

ROOF ASSEMBLY 1
COMPOSITION SHINGLE - 50 YR
WEATHER PROOFING MEMBRANE.
5/8" CDX PLYWOOD - SEE STRUCT.
RAFTERS PER STRUCT.
R-38 INSULATION ASSY NON-VENTED
SEE SHEETS A-0.2 FOR ENERGY
5/8" SHEET ROCK

5" HALF ROUND GUTTERS
W/CLIPS O/ 1-1/4" x 8" FASCIA

TYPICAL EXTERIOR WALL
SIDING MATERIALS PER ELEVATIONS &
EXTERIOR MATERIALS LIST.
RAINSCREEN MESH O/ WEATHERPROOF
BREATHABLE MEMBRANE O/
1/2" CDX PLYWOOD - SEE STRUCT.
2X6 STUDS @ 16" O.C. TYP U.N.O.
R-25 INSULATION ASSY PER SHEET A-0.2
5/8" SHEETROCK

I ROOF EVE DETAIL
I" = I'-0"

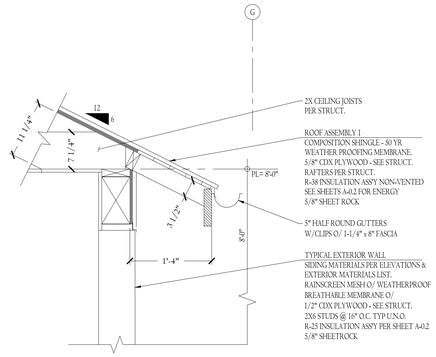

2X CEILING JOISTS
PER STRUCT.

ROOF ASSEMBLY 1
COMPOSITION SHINGLE - 50 YR
WEATHER PROOFING MEMBRANE.
5/8" CDX PLYWOOD - SEE STRUCT.
RAFTERS PER STRUCT.
R-38 INSULATION ASSY NON-VENTED
SEE SHEETS A-0.2 FOR ENERGY
5/8" SHEET ROCK

5" HALF ROUND GUTTERS
W/CLIPS O/ 1-1/4" x 8" FASCIA

TYPICAL EXTERIOR WALL
SIDING MATERIALS PER ELEVATIONS &
EXTERIOR MATERIALS LIST.
RAINSCREEN MESH O/ WEATHERPROOF
BREATHABLE MEMBRANE O/
1/2" CDX PLYWOOD - SEE STRUCT.
2X6 STUDS @ 16" O.C. TYP U.N.O.
R-25 INSULATION ASSY PER SHEET A-0.2
5/8" SHEETROCK

II DETAIL
I" = I'-0"

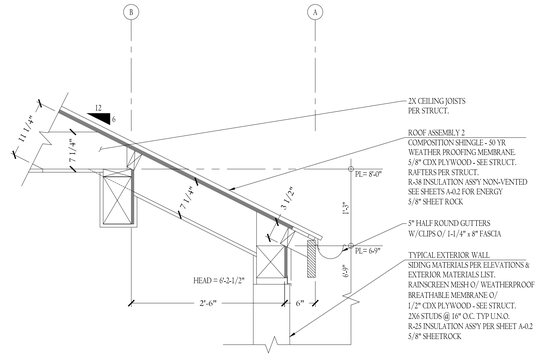

2X CEILING JOISTS
PER STRUCT.

ROOF ASSEMBLY 2
COMPOSITION SHINGLE - 50 YR
WEATHER PROOFING MEMBRANE.
5/8" CDX PLYWOOD - SEE STRUCT.
RAFTERS PER STRUCT.
R-38 INSULATION ASSY NON-VENTED
SEE SHEETS A-0.2 FOR ENERGY
5/8" SHEET ROCK

5" HALF ROUND GUTTERS
W/CLIPS O/ 1-1/4" x 8" FASCIA

TYPICAL EXTERIOR WALL
SIDING MATERIALS PER ELEVATIONS &
EXTERIOR MATERIALS LIST.
RAINSCREEN MESH O/ WEATHERPROOF
BREATHABLE MEMBRANE O/
1/2" CDX PLYWOOD - SEE STRUCT.
2X6 STUDS @ 16" O.C. TYP U.N.O.
R-25 INSULATION ASSY PER SHEET A-0.2
5/8" SHEETROCK

III DETAIL
I" = I'-0"

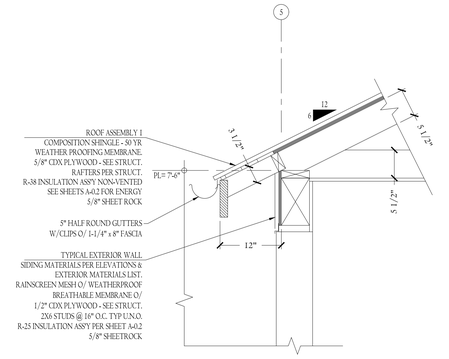

2X CEILING JOISTS
PER STRUCT.

ROOF ASSEMBLY 1
COMPOSITION SHINGLE - 50 YR
WEATHER PROOFING MEMBRANE.
5/8" CDX PLYWOOD - SEE STRUCT.
RAFTERS PER STRUCT.
R-38 INSULATION ASSY NON-VENTED
SEE SHEETS A-0.2 FOR ENERGY
5/8" SHEET ROCK

5" HALF ROUND GUTTERS
W/CLIPS O/ 1-1/4" x 8" FASCIA

TYPICAL EXTERIOR WALL
SIDING MATERIALS PER ELEVATIONS &
EXTERIOR MATERIALS LIST.
RAINSCREEN MESH O/ WEATHERPROOF
BREATHABLE MEMBRANE O/
1/2" CDX PLYWOOD - SEE STRUCT.
2X6 STUDS @ 16" O.C. TYP U.N.O.
R-25 INSULATION ASSY PER SHEET A-0.2
5/8" SHEETROCK

IV DETAIL
I" = I'-0"

ROOF ASSEMBLY 1
COMPOSITION SHINGLE - 50 YR
WEATHER PROOFING MEMBRANE.
5/8" CDX PLYWOOD - SEE STRUCT.
RAFTERS PER STRUCT.
R-38 INSULATION ASSY NON-VENTED
SEE SHEETS A-0.2 FOR ENERGY
5/8" SHEET ROCK

5" HALF ROUND GUTTERS
W/CLIPS O/ 1-1/4" x 8" FASCIA

TYPICAL EXTERIOR WALL
SIDING MATERIALS PER ELEVATIONS &
EXTERIOR MATERIALS LIST.
RAINSCREEN MESH O/ WEATHERPROOF
BREATHABLE MEMBRANE O/
1/2" CDX PLYWOOD - SEE STRUCT.
2X6 STUDS @ 16" O.C. TYP U.N.O.
R-25 INSULATION ASSY PER SHEET A-0.2
5/8" SHEETROCK

V DETAIL
I" = I'-0"

ROOF ASSEMBLY 1
COMPOSITION SHINGLE - 50 YR
WEATHER PROOFING MEMBRANE.
5/8" CDX PLYWOOD - SEE STRUCT.
RAFTERS PER STRUCT.
R-38 INSULATION ASSY NON-VENTED
SEE SHEETS A-0.2 FOR ENERGY
5/8" SHEET ROCK

5" HALF ROUND GUTTERS
W/CLIPS O/ 1-1/4" x 8" FASCIA

TYPICAL EXTERIOR WALL
SIDING MATERIALS PER ELEVATIONS &
EXTERIOR MATERIALS LIST.
RAINSCREEN MESH O/ WEATHERPROOF
BREATHABLE MEMBRANE O/
1/2" CDX PLYWOOD - SEE STRUCT.
2X6 STUDS @ 16" O.C. TYP U.N.O.
R-25 INSULATION ASSY PER SHEET A-0.2
5/8" SHEETROCK

VI DETAIL
I" = I'-0"

ROOF ASSEMBLY 1
COMPOSITION SHINGLE - 50 YR
WEATHER PROOFING MEMBRANE.
5/8" CDX PLYWOOD - SEE STRUCT.
RAFTERS PER STRUCT.
R-38 INSULATION ASSY NON-VENTED
SEE SHEETS A-0.2 FOR ENERGY
5/8" SHEET ROCK

5" HALF ROUND GUTTERS
W/CLIPS O/ 1-1/4" x 8" FASCIA

TYPICAL EXTERIOR WALL
SIDING MATERIALS PER ELEVATIONS &
EXTERIOR MATERIALS LIST.
RAINSCREEN MESH O/ WEATHERPROOF
BREATHABLE MEMBRANE O/
1/2" CDX PLYWOOD - SEE STRUCT.
2X6 STUDS @ 16" O.C. TYP U.N.O.
R-25 INSULATION ASSY PER SHEET A-0.2
5/8" SHEETROCK

VII DETAIL
I" = I'-0"

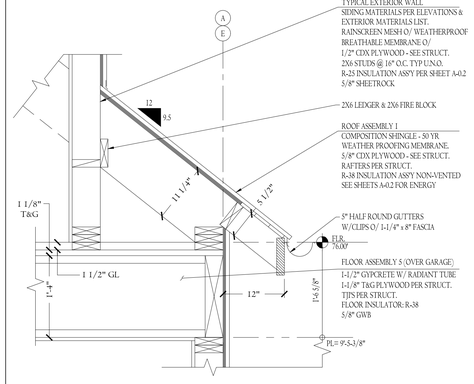

TYPICAL EXTERIOR WALL
SIDING MATERIALS PER ELEVATIONS &
EXTERIOR MATERIALS LIST.
RAINSCREEN MESH O/ WEATHERPROOF
BREATHABLE MEMBRANE O/
1/2" CDX PLYWOOD - SEE STRUCT.
2X6 STUDS @ 16" O.C. TYP U.N.O.
R-25 INSULATION ASSY PER SHEET A-0.2
5/8" SHEETROCK

2X6 LEDGER & 2X6 FIRE BLOCK

ROOF ASSEMBLY 1
COMPOSITION SHINGLE - 50 YR
WEATHER PROOFING MEMBRANE.
5/8" CDX PLYWOOD - SEE STRUCT.
RAFTERS PER STRUCT.
R-38 INSULATION ASSY NON-VENTED
SEE SHEETS A-0.2 FOR ENERGY

5" HALF ROUND GUTTERS
W/CLIPS O/ 1-1/4" x 8" FASCIA

FLOOR ASSEMBLY 5 (OVER GARAGE)
1-1/2" GYPCRETE W/ RADIANT TUBE
1-1/8" T&G PLYWOOD PER STRUCT.
TJI'S PER STRUCT.
FLOOR INSULATOR: R-38
5/8" GWB

VIII DETAIL
I" = I'-0"

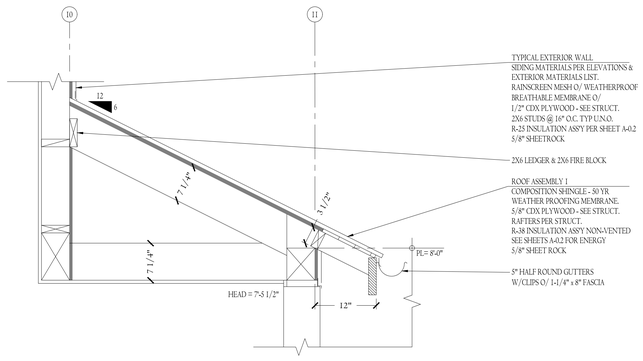

TYPICAL EXTERIOR WALL
SIDING MATERIALS PER ELEVATIONS &
EXTERIOR MATERIALS LIST.
RAINSCREEN MESH O/ WEATHERPROOF
BREATHABLE MEMBRANE O/
1/2" CDX PLYWOOD - SEE STRUCT.
2X6 STUDS @ 16" O.C. TYP U.N.O.
R-25 INSULATION ASSY PER SHEET A-0.2
5/8" SHEETROCK

2X6 LEDGER & 2X6 FIRE BLOCK

ROOF ASSEMBLY 1
COMPOSITION SHINGLE - 50 YR
WEATHER PROOFING MEMBRANE.
5/8" CDX PLYWOOD - SEE STRUCT.
RAFTERS PER STRUCT.
R-38 INSULATION ASSY NON-VENTED
SEE SHEETS A-0.2 FOR ENERGY
5/8" SHEET ROCK

5" HALF ROUND GUTTERS
W/CLIPS O/ 1-1/4" x 8" FASCIA

IX DETAIL
I" = I'-0"

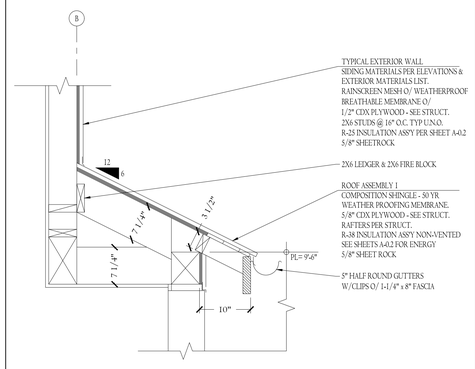

TYPICAL EXTERIOR WALL
SIDING MATERIALS PER ELEVATIONS &
EXTERIOR MATERIALS LIST.
RAINSCREEN MESH O/ WEATHERPROOF
BREATHABLE MEMBRANE O/
1/2" CDX PLYWOOD - SEE STRUCT.
2X6 STUDS @ 16" O.C. TYP U.N.O.
R-25 INSULATION ASSY PER SHEET A-0.2
5/8" SHEETROCK

2X6 LEDGER & 2X6 FIRE BLOCK

ROOF ASSEMBLY 1
COMPOSITION SHINGLE - 50 YR
WEATHER PROOFING MEMBRANE.
5/8" CDX PLYWOOD - SEE STRUCT.
RAFTERS PER STRUCT.
R-38 INSULATION ASSY NON-VENTED
SEE SHEETS A-0.2 FOR ENERGY
5/8" SHEET ROCK

5" HALF ROUND GUTTERS
W/CLIPS O/ 1-1/4" x 8" FASCIA

X DETAIL
I" = I'-0"

ROOF ASSEMBLY 1
COMPOSITION SHINGLE - 50 YR
WEATHER PROOFING MEMBRANE.
5/8" CDX PLYWOOD - SEE STRUCT.
RAFTERS PER STRUCT.
R-38 INSULATION ASSY NON-VENTED
SEE SHEETS A-0.2 FOR ENERGY
5/8" SHEET ROCK

5" HALF ROUND GUTTERS
W/CLIPS O/ 1-1/4" x 8" FASCIA

TYPICAL EXTERIOR WALL
SIDING MATERIALS PER ELEVATIONS &
EXTERIOR MATERIALS LIST.
RAINSCREEN MESH O/ WEATHERPROOF
BREATHABLE MEMBRANE O/
1/2" CDX PLYWOOD - SEE STRUCT.
2X6 STUDS @ 16" O.C. TYP U.N.O.
R-25 INSULATION ASSY PER SHEET A-0.2
5/8" SHEETROCK

XI DETAIL
I" = I'-0"

RF ARCHITECTURE
PH: (2 5 3) 3 5 9 - 4 0 3 9
RICHARD@RFARCHITECTURE.COM
7421 214TH AVE E BONNEYLAKE, WA 98391

6080
REGISTERED ARCHITECT
RICHARD W. FLAKE
STATE OF WASHINGTON

All drawings, specifications, plans, ideas, arrangements, and designs represented or referred to are the property of and owned by Richard Flake Architect no whether the project for which they are made is executed or not. They were created, evolved, developed and produced for sole use on and in connection with this project and none of the above may be disclosed or given to or used by any person, firm, or corporation for any use or purpose whatsoever including any other project, except upon written permission of Richard Flake Architect.

Copyright 2023
Richard Flake Architect

IDENCE
RESIDENCE
WA 98040

MURRAY RESIDENCE
NEW SINGLE FAMILY RESIDENCE
MERCER ISLAND, WA

DESIGN:
RWF

DRAWN:
HAVILAND CONSULTING

CHECKED:
RWF

REVISIONS:

1 PER CITY REVIEW
10.23.2023
REVISIONS

2 PER CITY REVIEW
8.8.2023
REVISIONS

September 15, 2023

1 A-8.5

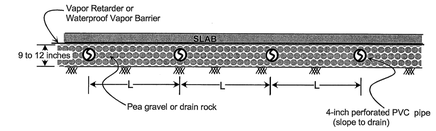

NOTES:

(1) Refer to the report text for additional drainage and waterproofing considerations.
(2) The typical maximum underslab drain separation (L) is 15 to 20 feet.
(3) No filter fabric is necessary beneath the pipes as long as a minimum thickness of 4 inches of rock is maintained beneath the pipes.
(4) The underslab drains and foundation drains should discharge to a suitable outfall.

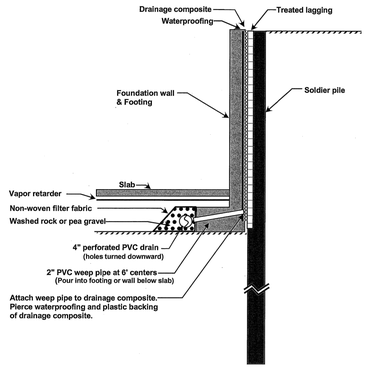

Note - Refer to the report for additional considerations related to drainage and waterproofing.

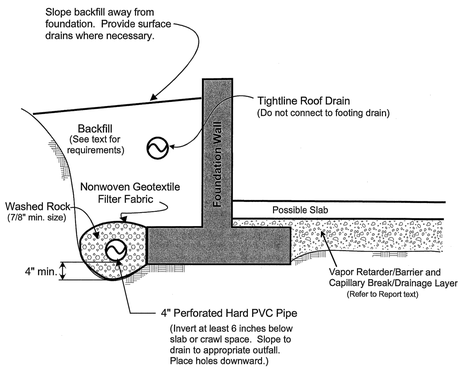

NOTES:
(1) In crawl spaces, provide an outlet drain to prevent buildup of water that bypasses the perimeter footing drains.
(2) Refer to report text for additional drainage, waterproofing, and slab considerations.

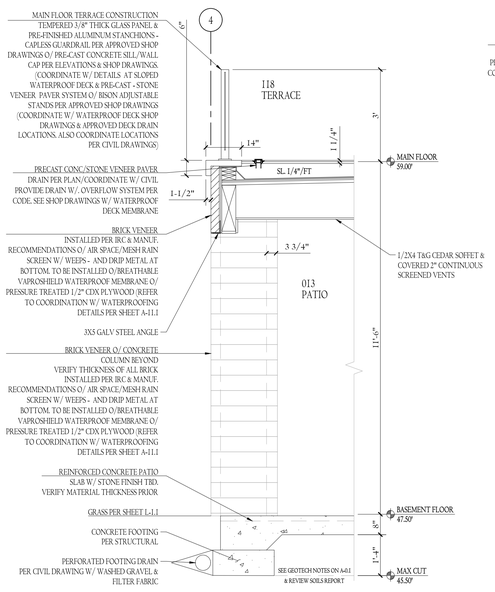

1 WALL SECTION
SCALE: 1/2" = 1'-0"

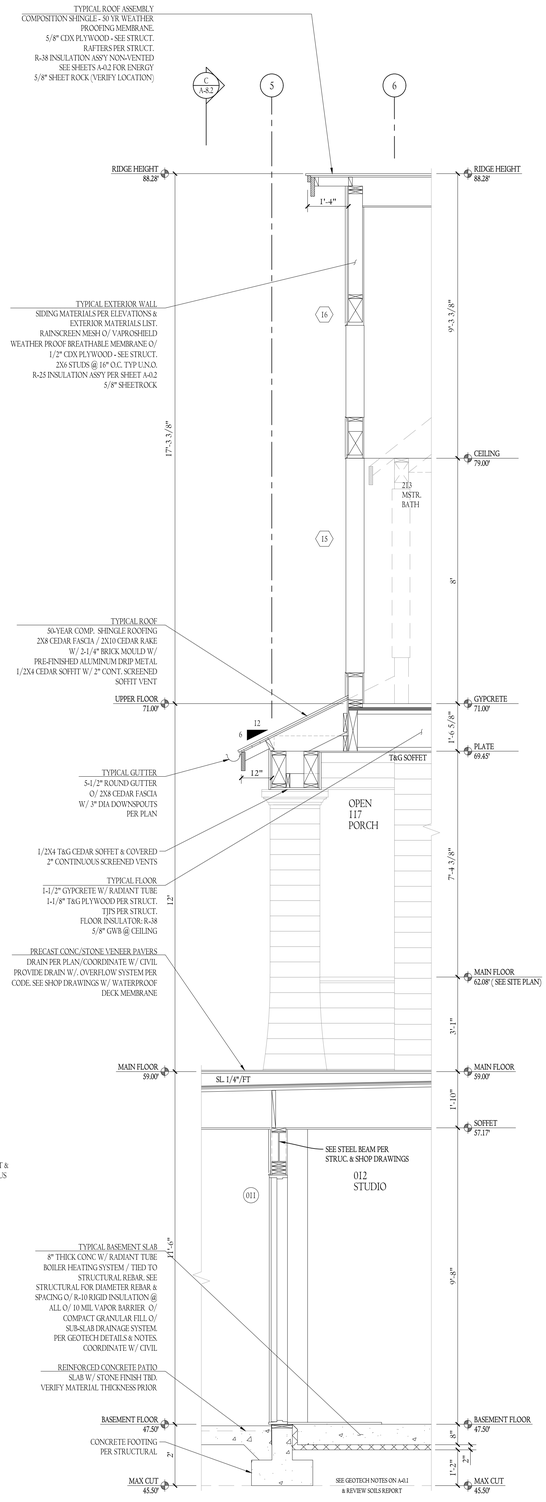

2 WALL SECTION
SCALE: 1/2" = 1'-0"

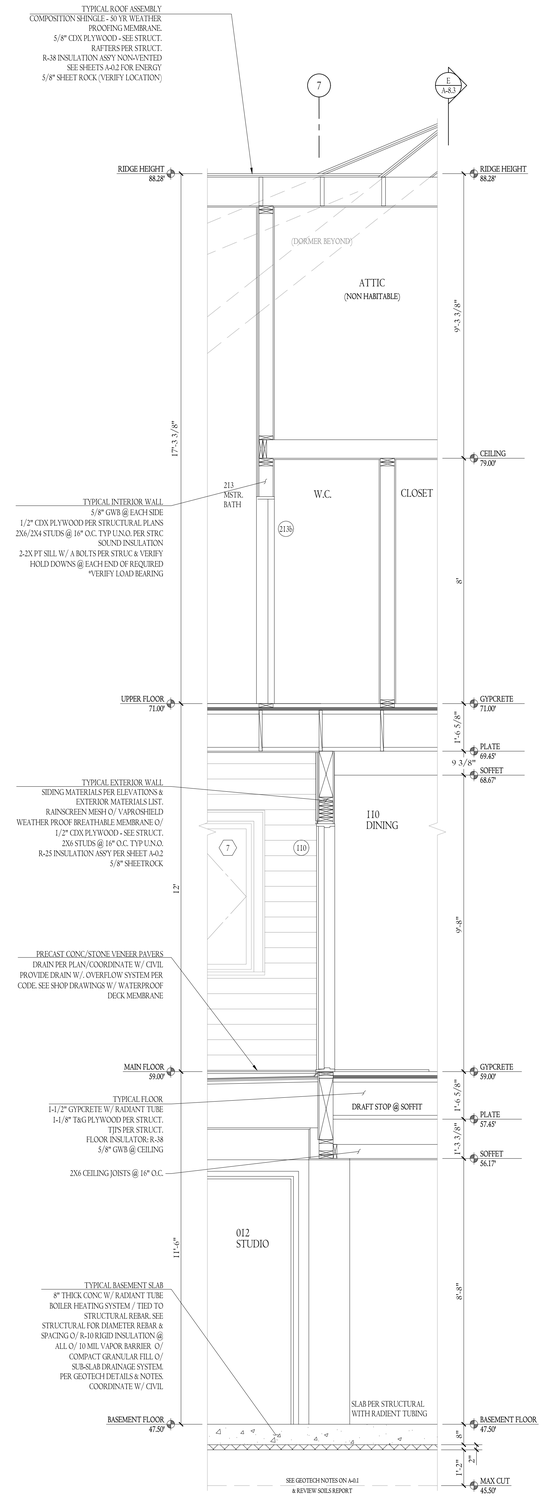

3 WALL SECTION
SCALE: 1/2" = 1'-0"

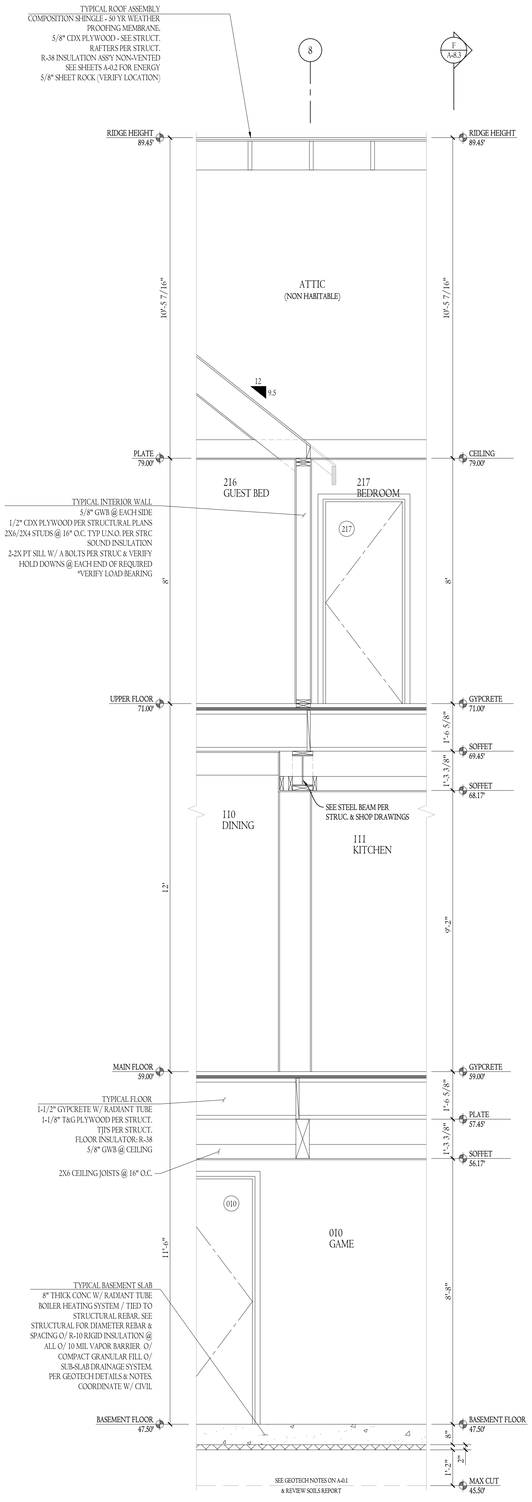

4 WALL SECTION
SCALE: 1/2" = 1'-0"

RF ARCHITECTURE
PH: (253) 359-4039
RICHARD@RFARCHITECTURE.COM
7421 214TH AVE E BONNEYLAKE, WA 98391

6080
REGISTERED
ARCHITECT
RICHARD W. FLAKE
STATE OF WASHINGTON

All drawings, specifications, plans, ideas, arrangements, and designs represented or referred to are the property of and owned by Richard Flake Architect in whether the project for which they are made is executed or not. They were created, evolved, developed and produced for sole use on and in connection with this project and none of the above may be disclosed or given to or used by any person, firm, or corporation for any use or purpose whatsoever including any other project, except upon written permission of Richard Flake Architect.

Copyright 2023
Richard Flake Architect

MURRAY RESIDENCE
NEW SINGLE FAMILY RESIDENCE
MERCER ISLAND, WA

DESIGN:
RWF
DRAWN:
HAVILAND CONSULTING
CHECKED:
RWF
REVISIONS:
1 PER CITY REVIEW
10-22-2021
REVISIONS
2 PER CITY REVIEW
4-8-2023
REVISIONS

September 15, 2023

A-9.1

MURRAY RESIDENCE

NEW SINGLE FAMILY RESIDENCE

8040 WAVERLY AVE, MERCER ISLAND, WA 98040

RF ARCHITECTURE

PH: (253)359-4039

RICHARD@RFARCHITECTURE.COM

7421 214TH AVE E BONNEY LAKE, WA 98391

All drawings, specifications, plans, ideas, interpretations, and designs represented or indicated in or for property of and owned by Richard Fiske Architect in whether the project for which they were created, evolved, developed and produced for wole use on and for construction was executed or not. They were created, evolved, prepared for which they are made is retained by Richard Fiske Architect. Architect in whether the project for which they are made is retained by Richard Fiske Architect.

Any reproduction, publication, exhibition, disclosure or other use of these drawings for any purpose is in or for any person, firm or corporation for any use or purpose whatsoever including any other project without written permission of Richard Fiske Architect.

Copyright 2023
Richard Fiske Architect

REGISTERED ARCHITECT
STATE OF WASHINGTON
RICHARD M. FISKE
6080

DESIGN:	RWF
DRAWN:	HALL AND CONSULTING
CHECKED:	RWF
REVISIONS:	
△ PER CITY REVIEW	10.22.2021
REVISIONS	
△ PER CITY REVIEW	9.8.2022
REVISIONS	

September 15, 2023

A-9.2

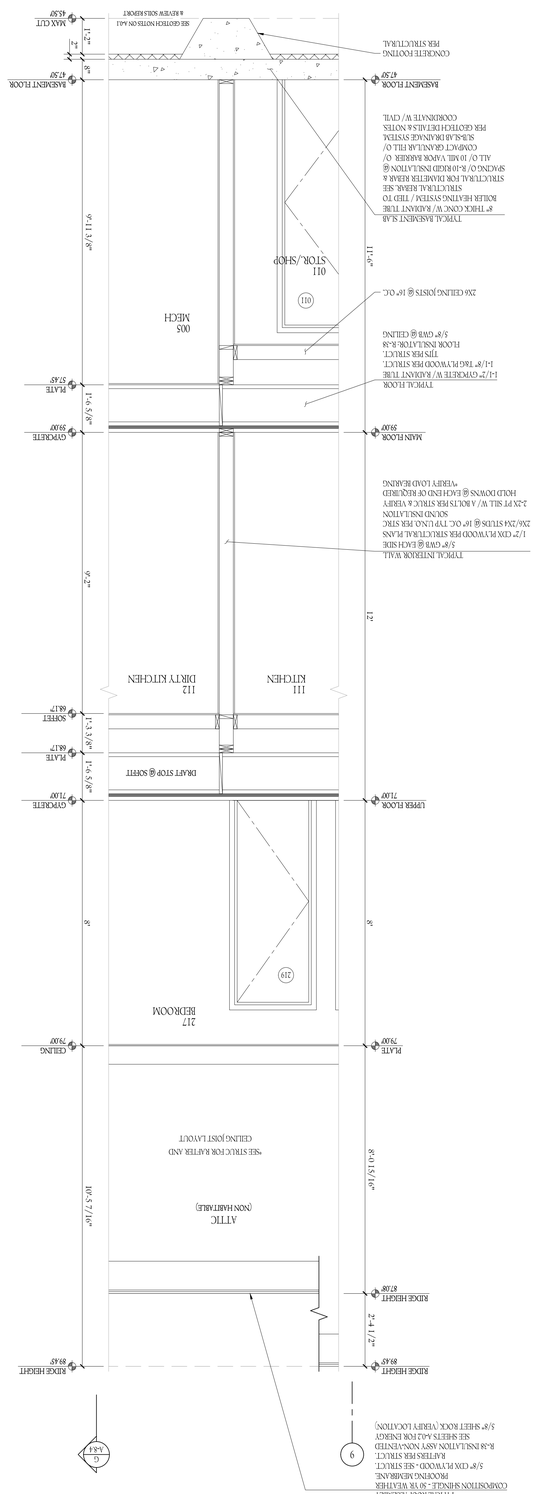

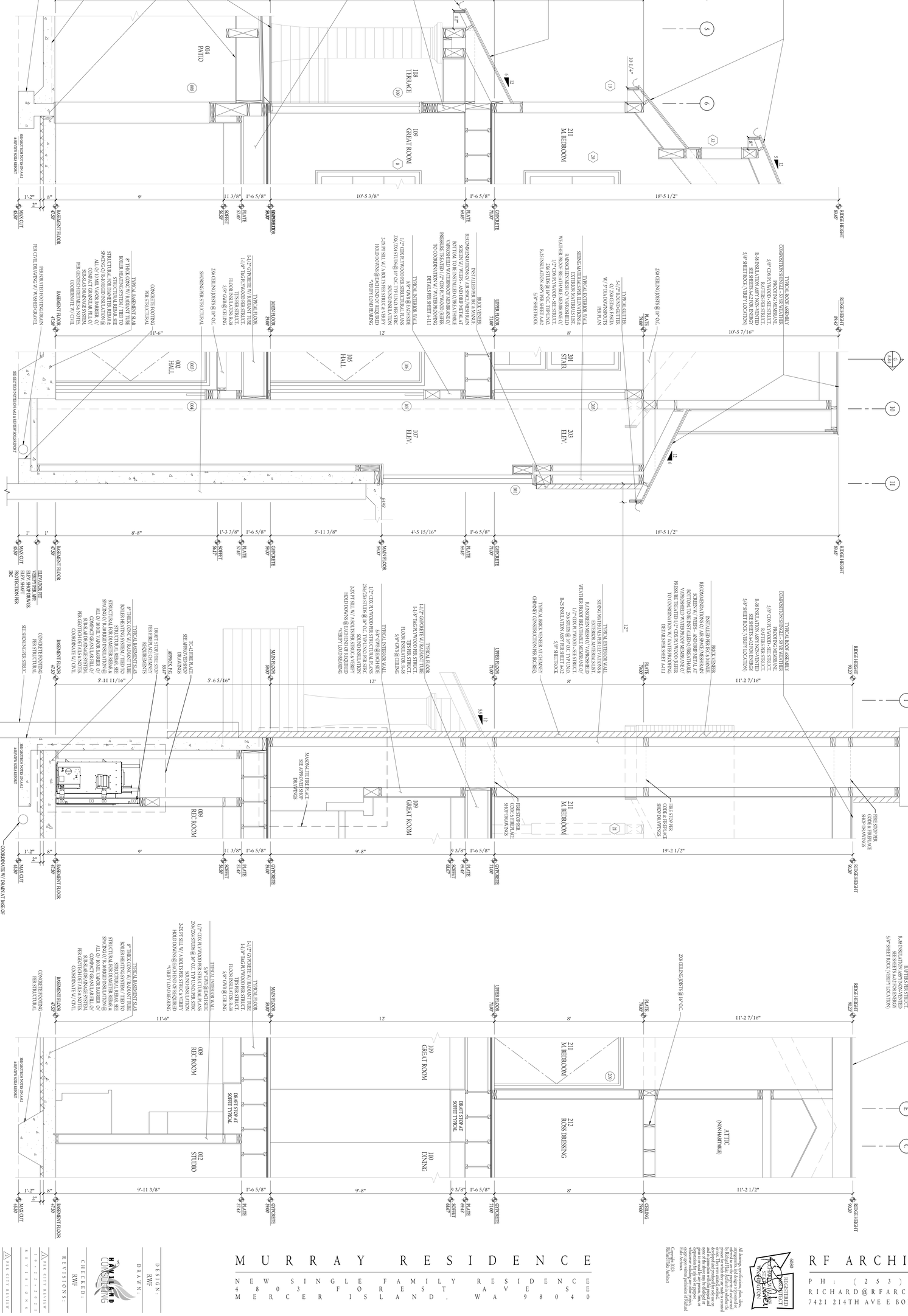

M U R R A Y R E S I D E N C E

N E W S I N G L E F A M I L Y R E S I D E N C E
4 8 0 3 F O R E S T A V E S
M E R C E R I S L A N D , W A 9 8 0 4 0

DESIGN:
RWF
DRAWN:
RWF

CHECKED:
RWF

REVISIONS:
PAR CITY REVIEW
1 2 - 2 7 - 2 0 2 1
REVISIONS
PAR CITY REVIEW
9 - 1 4 - 2 0 2 2
REVISIONS

HAVELAND CONSULTING

September 15, 2023.

A-9.3

RF ARCHITECTURE
P H : (2 5 3) 3 5 9 - 4 0 3 9
R I C H A R D @ R F A R C H I T E C T U R E . C O M
7 4 2 1 2 1 4 T H A V E E B O N N E Y L A K E , W A 9 8 3 9 1

All drawings, specifications, plans, ideas, designs and arrangements indicated or represented on the property of and owned by RF Architecture and shall not be used in connection with any work other than the project for which they are made or executed unless written permission is obtained from RF Architecture. Visual contact with these drawings or specifications shall constitute prima facie evidence of the acceptance of these restrictions. Copyright 2021 RF Architecture

MURRAY RESIDENCE

NEW SINGLE FAMILY RESIDENCE
AT 8040 WAVE
MERCER ISLAND, WA

REVISIONS:
CHECKED: RWF
▲ PARK REVIEW 10.22.2021
REVISIONS
▲ PARK REVIEW 9.8.2023
REVISIONS

DESIGN: RWF
DRAWN:

HAVALAND CONSULTING

September 15, 2023

A-9.4

RF ARCHITECTURE
6080
PH: (253)359-4039
RICHARD@RFARCHITECTURE.COM
7421 214TH AVE E BONNEYLAKE, WA 98391

REGISTERED ARCHITECT
RICHARD W. FRY
STATE OF WASHINGTON

All drawings, specifications, plans, ideas, arrangements, and designs represented or referred to are the property of and owned by Richard Fry Architecture. Reserved for which they are made or executed. Prepared for Murray Residence only and not to be used on any other project. Any use in connection with this project and otherwise excluding any use or purpose whatsoever for any use or purpose given to or used by any person, firm or corporation for whom or for whose use the above may be designed or prepared without the written consent of Richard Fry Architecture.

Copyright 2023
Richard Fry Architect

13 WALL SECTION
SCALE: 1/2" = 1'-0"

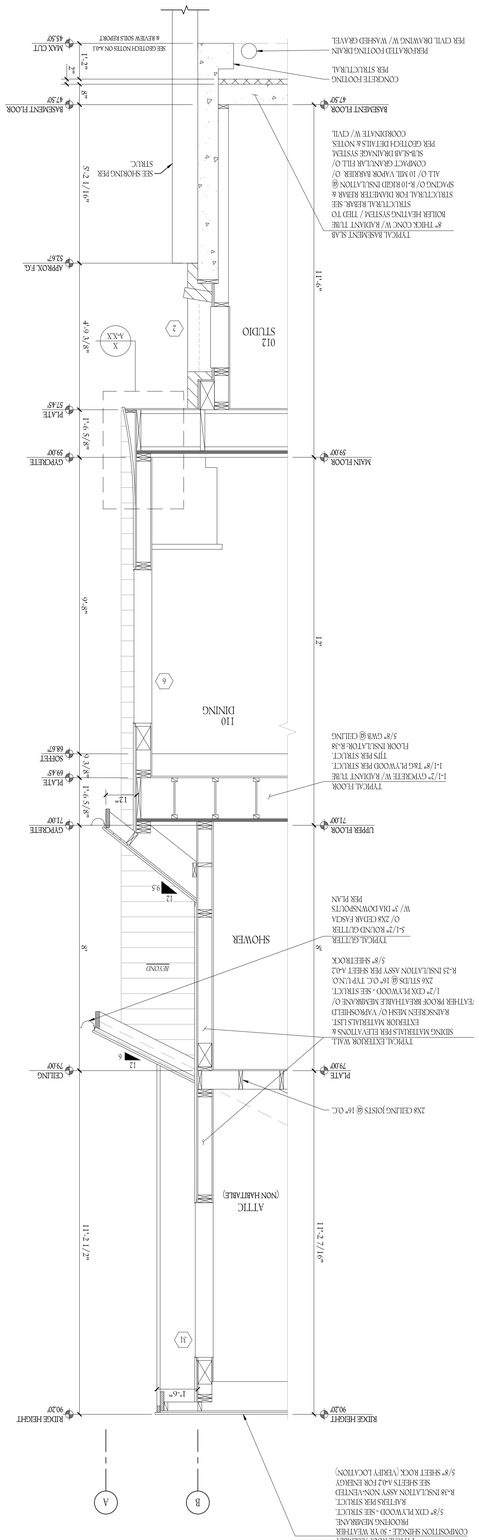

14 WALL SECTION
SCALE: 1/2" = 1'-0"

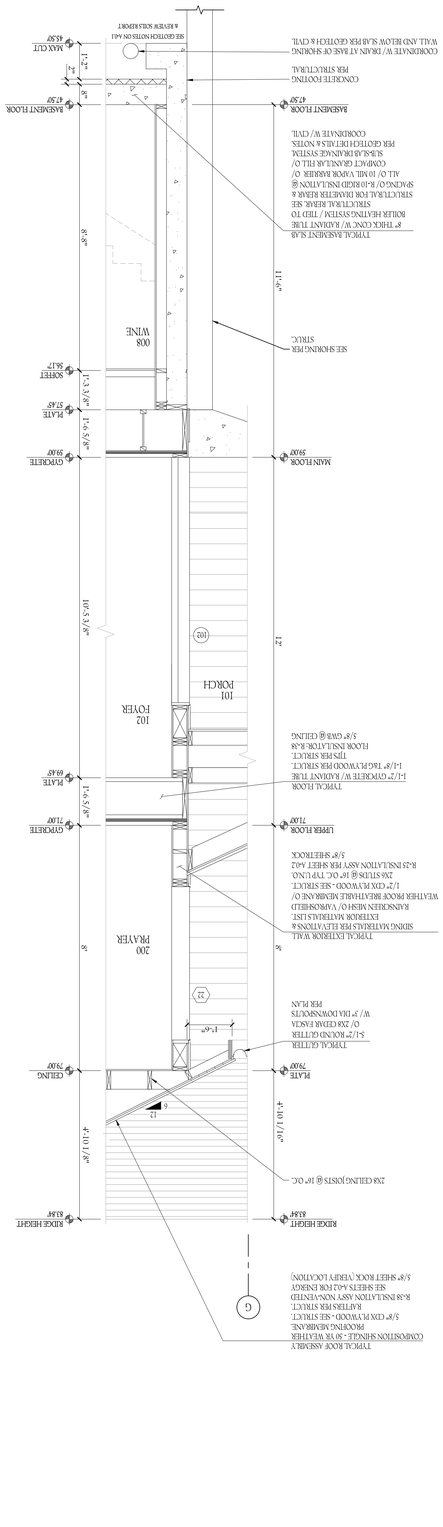

15 WALL SECTION
SCALE: 1/2" = 1'-0"

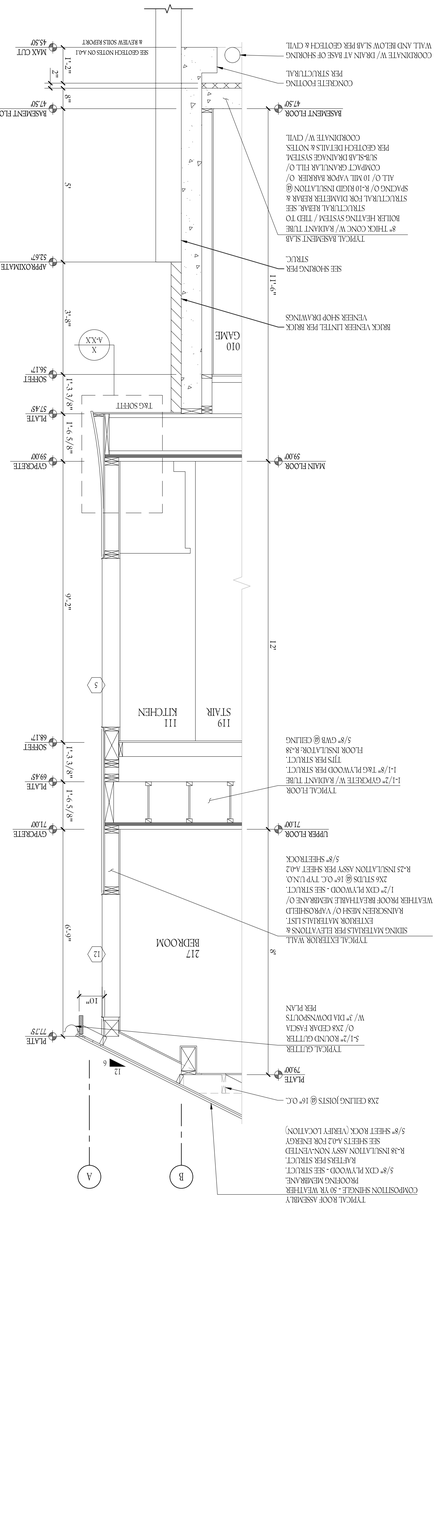

16 WALL SECTION
SCALE: 1/2" = 1'-0"

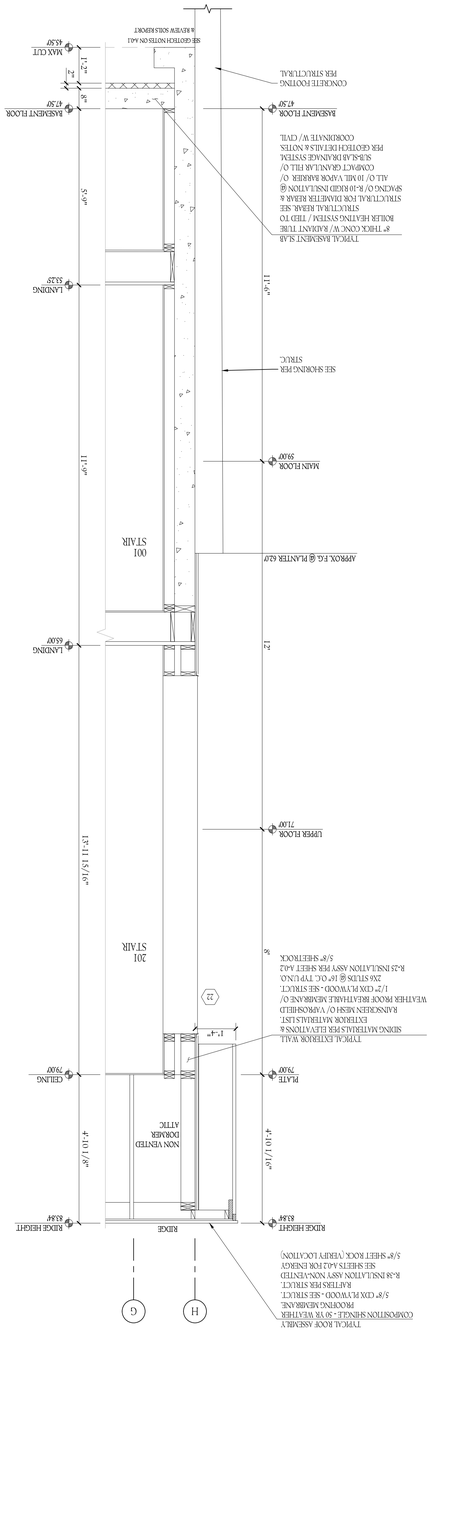

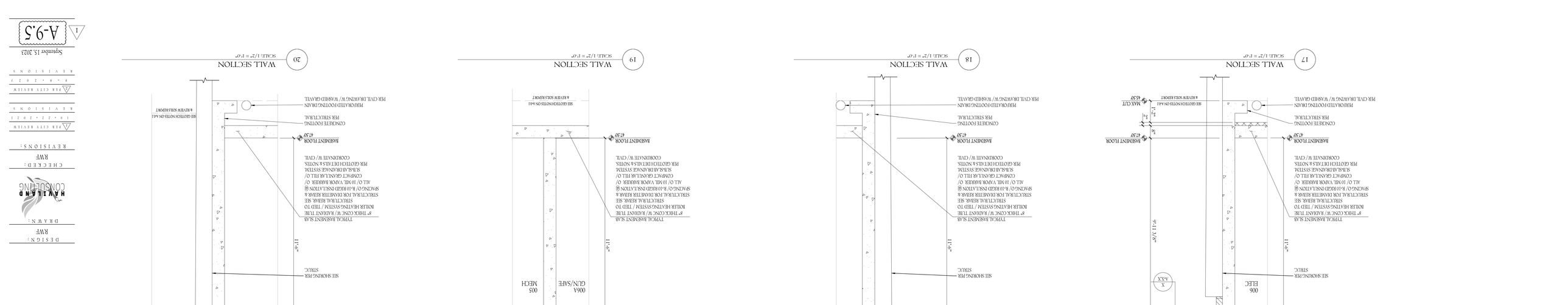
17
WALL SECTION
SCALE: 1/2" = 1'-0"
18
WALL SECTION
SCALE: 1/2" = 1'-0"
19
WALL SECTION
SCALE: 1/2" = 1'-0"
20
WALL SECTION
SCALE: 1/2" = 1'-0"
BASEMENT FLOOR
47.50'
MAIN FLOOR
90.00'
BONUS FLOOR
76.00'
GARAGE FLOOR
65.00'
UPPER FLOOR
71.00'
ROOF RIDGE HEIGHT
90.29'
TYPICAL ASPHALT SLAB
8" THICK CONC W/ RADIANT TUBE
ROLLER HEATING SYSTEM / TIED TO
STRUCTURAL REBAR. SEE
STRUCTURAL FOR DOWEL SIZE &
SPACING O/ 8-10 HOOD INSULATION @
CAMPACT GRANULAR FILL O/
ALL O/ 10 MIL VAPOR BARRIER O/
SEAL AT DRAINAGE SYSTEM
SEE GEOTECH DETAILS & NOTES
COORDINATE W/ CIVIL
CONCRETE FOOTING
PER STRUCTURAL
PERFORATED FOOTING DRAIN
PER CIVIL DRAWING W/ WASHED GRAVEL
SEE GEOTECH NOTES ON A4.1
& BEYER SOILS REPORT
SEE SHORING PER STRUC.
TYPICAL EXTERIOR WALL
SIDING MATERIALS PER ELEVATIONS &
EXTERIOR MATTERIALS LIST.
RAINSCREEN MESH O/ VAPORSHIELD
WEATHER PROOF BREATHABLE MEMBRANE O/
1/2" CDX PLYWOOD - SEE STRUCT.
2X6 STUDS @ 16" O.C. TYP U.N.O.
R-25 INSULATION ASSY PER SHEET A4.2
5/8" SHEETROCK
TYPICAL ROOF ASSEMBLY
COMPOSITION SHINGLE - 50 YR WEATHER
PROOFING MEMBRANE
5/8" CDX PLYWOOD - SEE STRUCT.
RAFTERS PER STRUCT.
R-38 INSULATION ASSY NON-VENTED
SEE SHEETS A4.2 FOR ENERGY
5/8" SHEET ROCK (HEIGHT LOCATION)
TYPICAL GUTTER
5-1/2" ROUND GUTTER
O/ 2X8 CEDAR FASCIA
W/ 2" DIA DOWNSPOUTS
PER PLAN
2X8 CEILING JOISTS @ 16" O.C.
TYPICAL FLOOR
1-1/2" GYPCRETE W/ RADIANT TUBE
1-1/8" T&G PLYWOOD PER STRUCT.
TYPS PER STRUCT.
FLOOR INSULATOR: R-38
5/8" GWB @ CEILING
TYPICAL A.SLAB
8" THICK CONC W/ RADIANT TUBE
ROLLER HEATING SYSTEM / TIED TO
STRUCTURAL REBAR. SEE
STRUCTURAL FOR DOWEL SIZE &
SPACING O/ 8-10 HOOD INSULATION @
CAMPACT GRANULAR FILL O/
ALL O/ 10 MIL VAPOR BARRIER O/
SEAL AT DRAINAGE SYSTEM
SEE GEOTECH DETAILS & NOTES
COORDINATE W/ CIVIL
CONCRETE FOOTING
PER STRUCTURAL
PERFORATED FOOTING DRAIN
PER CIVIL DRAWING W/ WASHED GRAVEL
SEE GEOTECH NOTES ON A4.1
& BEYER SOILS REPORT
SEE SHORING PER STRUC.
TYPICAL EXTERIOR WALL
SIDING MATERIALS PER ELEVATIONS &
EXTERIOR MATTERIALS LIST.
RAINSCREEN MESH O/ VAPORSHIELD
WEATHER PROOF BREATHABLE MEMBRANE O/
1/2" CDX PLYWOOD - SEE STRUCT.
2X6 STUDS @ 16" O.C. TYP U.N.O.
R-25 INSULATION ASSY PER SHEET A4.2
5/8" SHEETROCK
TYPICAL ROOF ASSEMBLY
COMPOSITION SHINGLE - 50 YR WEATHER
PROOFING MEMBRANE
5/8" CDX PLYWOOD - SEE STRUCT.
RAFTERS PER STRUCT.
R-38 INSULATION ASSY NON-VENTED
SEE SHEETS A4.2 FOR ENERGY
5/8" SHEET ROCK (HEIGHT LOCATION)
TYPICAL FLOOR
1-1/2" GYPCRETE W/ RADIANT TUBE
1-1/8" T&G PLYWOOD PER STRUCT.
TYPS PER STRUCT.
FLOOR INSULATOR: R-38
5/8" GWB @ CEILING
TYPICAL A.SLAB
8" THICK CONC W/ RADIANT TUBE
ROLLER HEATING SYSTEM / TIED TO
STRUCTURAL REBAR. SEE
STRUCTURAL FOR DOWEL SIZE &
SPACING O/ 8-10 HOOD INSULATION @
CAMPACT GRANULAR FILL O/
ALL O/ 10 MIL VAPOR BARRIER O/
SEAL AT DRAINAGE SYSTEM
SEE GEOTECH DETAILS & NOTES
COORDINATE W/ CIVIL
CONCRETE FOOTING
PER STRUCTURAL
PERFORATED FOOTING DRAIN
PER CIVIL DRAWING W/ WASHED GRAVEL
SEE GEOTECH NOTES ON A4.1
& BEYER SOILS REPORT
SEE SHORING PER STRUC.
TYPICAL EXTERIOR WALL
SIDING MATERIALS PER ELEVATIONS &
EXTERIOR MATTERIALS LIST.
RAINSCREEN MESH O/ VAPORSHIELD
WEATHER PROOF BREATHABLE MEMBRANE O/
1/2" CDX PLYWOOD - SEE STRUCT.
2X6 STUDS @ 16" O.C. TYP U.N.O.
R-25 INSULATION ASSY PER SHEET A4.2
5/8" SHEETROCK
TYPICAL ROOF ASSEMBLY
COMPOSITION SHINGLE - 50 YR WEATHER
PROOFING MEMBRANE
5/8" CDX PLYWOOD - SEE STRUCT.
RAFTERS PER STRUCT.
R-38 INSULATION ASSY NON-VENTED
SEE SHEETS A4.2 FOR ENERGY
5/8" SHEET ROCK (HEIGHT LOCATION)
TYPICAL FLOOR
1-1/2" GYPCRETE W/ RADIANT TUBE
1-1/8" T&G PLYWOOD PER STRUCT.
TYPS PER STRUCT.
FLOOR INSULATOR: R-38
5/8" GWB @ CEILING
TYPICAL A.SLAB
8" THICK CONC W/ RADIANT TUBE
ROLLER HEATING SYSTEM / TIED TO
STRUCTURAL REBAR. SEE
STRUCTURAL FOR DOWEL SIZE &
SPACING O/ 8-10 HOOD INSULATION @
CAMPACT GRANULAR FILL O/
ALL O/ 10 MIL VAPOR BARRIER O/
SEAL AT DRAINAGE SYSTEM
SEE GEOTECH DETAILS & NOTES
COORDINATE W/ CIVIL
CONCRETE FOOTING
PER STRUCTURAL
PERFORATED FOOTING DRAIN
PER CIVIL DRAWING W/ WASHED GRAVEL
SEE GEOTECH NOTES ON A4.1
& BEYER SOILS REPORT
SEE SHORING PER STRUC.
TYPICAL EXTERIOR WALL
SIDING MATERIALS PER ELEVATIONS &
EXTERIOR MATTERIALS LIST.
RAINSCREEN MESH O/ VAPORSHIELD
WEATHER PROOF BREATHABLE MEMBRANE O/
1/2" CDX PLYWOOD - SEE STRUCT.
2X6 STUDS @ 16" O.C. TYP U.N.O.
R-25 INSULATION ASSY PER SHEET A4.2
5/8" SHEETROCK
TYPICAL ROOF ASSEMBLY
COMPOSITION SHINGLE - 50 YR WEATHER
PROOFING MEMBRANE
5/8" CDX PLYWOOD - SEE STRUCT.
RAFTERS PER STRUCT.
R-38 INSULATION ASSY NON-VENTED
SEE SHEETS A4.2 FOR ENERGY
5/8" SHEET ROCK (HEIGHT LOCATION)
TYPICAL FLOOR
1-1/2" GYPCRETE W/ RADIANT TUBE
1-1/8" T&G PLYWOOD PER STRUCT.
TYPS PER STRUCT.
FLOOR INSULATOR: R-38
5/8" GWB @ CEILING
TYPICAL A.SLAB
8" THICK CONC W/ RADIANT TUBE
ROLLER HEATING SYSTEM / TIED TO
STRUCTURAL REBAR. SEE
STRUCTURAL FOR DOWEL SIZE &
SPACING O/ 8-10 HOOD INSULATION @
CAMPACT GRANULAR FILL O/
ALL O/ 10 MIL VAPOR BARRIER O/
SEAL AT DRAINAGE SYSTEM
SEE GEOTECH DETAILS & NOTES
COORDINATE W/ CIVIL
CONCRETE FOOTING
PER STRUCTURAL
PERFORATED FOOTING DRAIN
PER CIVIL DRAWING W/ WASHED GRAVEL
SEE GEOTECH NOTES ON A4.1
& BEYER SOILS REPORT
SEE SHORING PER STRUC.
TYPICAL EXTERIOR WALL
SIDING MATERIALS PER ELEVATIONS &
EXTERIOR MATTERIALS LIST.
RAINSCREEN MESH O/ VAPORSHIELD
WEATHER PROOF BREATHABLE MEMBRANE O/
1/2" CDX PLYWOOD - SEE STRUCT.
2X6 STUDS @ 16" O.C. TYP U.N.O.
R-25 INSULATION ASSY PER SHEET A4.2
5/8" SHEETROCK
TYPICAL ROOF ASSEMBLY
COMPOSITION SHINGLE - 50 YR WEATHER
PROOFING MEMBRANE
5/8" CDX PLYWOOD - SEE STRUCT.
RAFTERS PER STRUCT.
R-38 INSULATION ASSY NON-VENTED
SEE SHEETS A4.2 FOR ENERGY
5/8" SHEET ROCK (HEIGHT LOCATION)
CRAWL
HALL
206
STAIR
119
SERVICE
115
PORCH
120
ENTRY
111
KITCHEN
LIVING
110
BEDROOM
217
STOR.
207
CLOSET
209
GLSN/SAFE
006A
MECH
005
ELEC
006
LANDING
PLATE
SOFFIT
TAG SOFFIT
GYPCRETE
SHEET
X
4
5
A
B
C
E
A4.1
1
12
6
10'-5 3/8"
9'-11 1/4"
9'-6 15/16"
14'-2 7/16"
14'-4 3/8"
11'-2 7/16"
11'-6"
17'
6'
10"
2"
1'-2"
1'-3"
3'
8"
5'-5 1/2"
9'-7 3/8"
10 3/4"
1'-6 5/8"
1'-9 1/2"
1'-4 5/8"
1'-3 1/4"
1'-0"
A-9.5
1
Sheet No.
Sheet Title
September 15, 2023
Date
PARK CITY REVIEW
9 . 8 . 2023
PARK CITY REVIEW
10 . 22 . 2023
REVISIONS
REVISIONS:
CHECKED:
RWF
DESIGN:
RWF
DRAWN:
HALLAND
CONSULTING
MURRAY RESIDENCE
9804 0 AVE NE, WASHINGTON
NEW SINGLE FAMILY RESIDENCE
MERCER ISLAND,
RF ARCHITECTURE
PH: (253) 359-4039
RICHARD@RFARCHITECTURE.COM
7421 214TH AVE E BONNEYLAKE, WA 98391
REGISTERED ARCHITECT
RICHARD W. FRY
STATE OF WASHINGTON
6080
All drawings, specifications, plans, ideas, arrangements, and designs represented or referred to in the property or and owned by Richard Fry Architecture is whether the project for which they are made is executed or not. They were created, evolved, developed and produced for sole use on and in connection with this project and may not be used by any person, firm or corporation for any use or purpose whatsoever excluding any other project Fry Architecture.
Copyright 2023
Richard Fry Architect

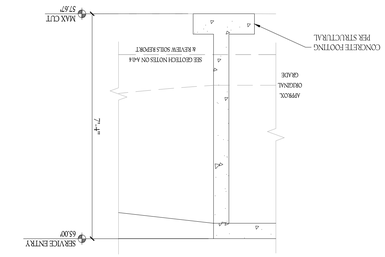

21 WALL SECTION
SCALE: 1/2" = 1'-0"

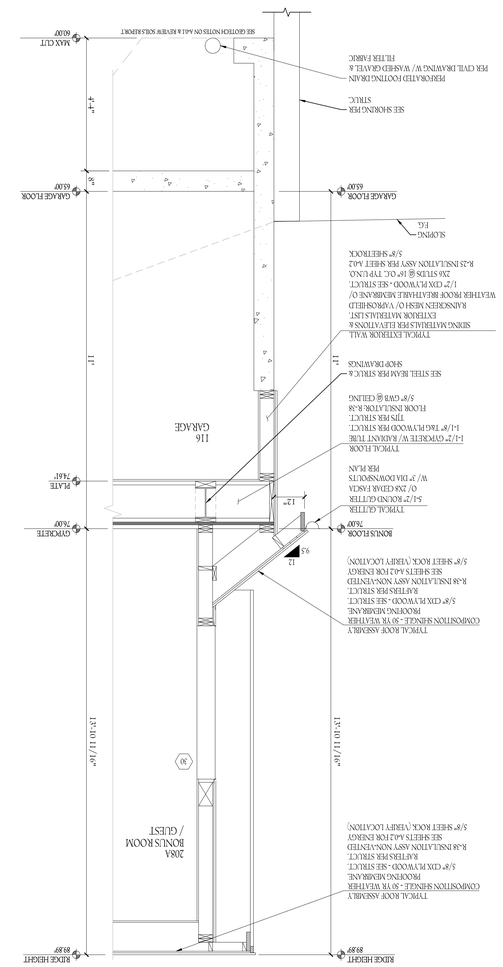

22 WALL SECTION
SCALE: 1/2" = 1'-0"

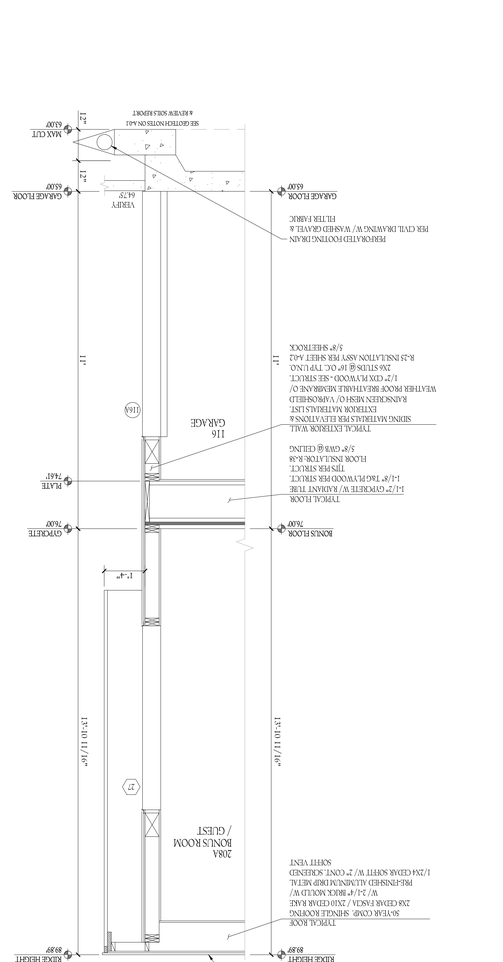

23 WALL SECTION
SCALE: 1/2" = 1'-0"

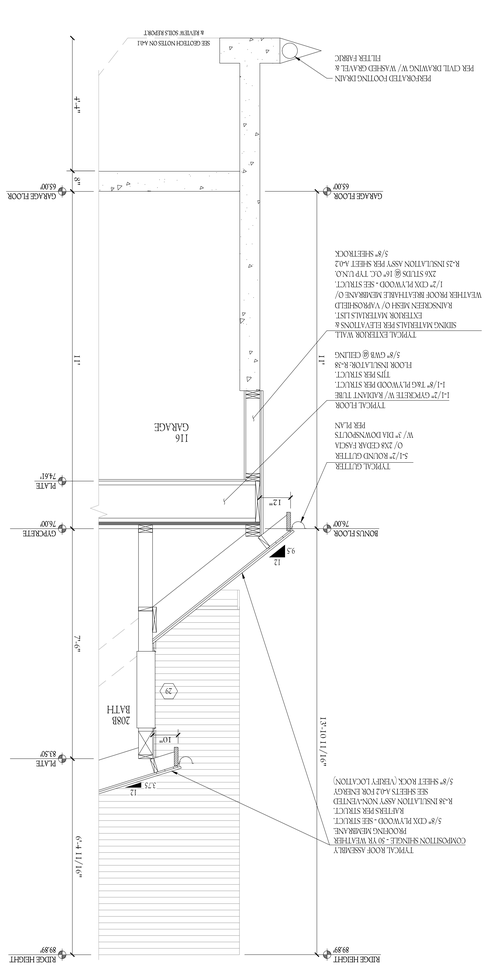

24 WALL SECTION
SCALE: 1/2" = 1'-0"

25 WALL SECTION
SCALE: 1/2" = 1'-0"

MURRAY RESIDENCE

NEW SINGLE FAMILY RESIDENCE
4805 MERCER ISLAND, WA 98040

RF ARCHITECTURE
RICHARD@RFARCHITECTURE.COM
7421 214TH AVE E BONNEY LAKE, WA 98391
PH: (253) 359-4039

DESIGN:
RWF

DRAWN:
HAVELAND CONSULTING

CHECKED:
RWF

REVISIONS:

△ PER CITY REVIEW
10.22.2021

REVISIONS

△ PER CITY REVIEW
9.8.2022

REVISIONS

△1 A-9.6

September 15, 2023

All drawings, specifications, plans, ideas, interpretations, and designs represented or indicated in or on the property of and owned by Richard Fuller Architect in whole or in part are and shall remain the property of RF Architecture and shall not be used in any manner whatsoever without the express written permission of Richard Fuller Architect.

Copyright 2021

6080
REGISTERED ARCHITECT
STATE OF WASHINGTON
RICHARD W. FULLER

TYPICAL ROOF ASSEMBLY
COMPOSITION SHINGLE - 5
ROOFING MADABANE
5/8" CDX PLYWOOD - SEE S
R-38 INSULATION ASSY NC
BATTISS PER STRUCT.
SEE SHEETS A-02 FOR INSP
5/8" SHEET ROCK (VARIFY

EXTERIOR CONCRETE STAIRS TO FOLLOW BASED ON CONFIRMATION OF SITE GRADING

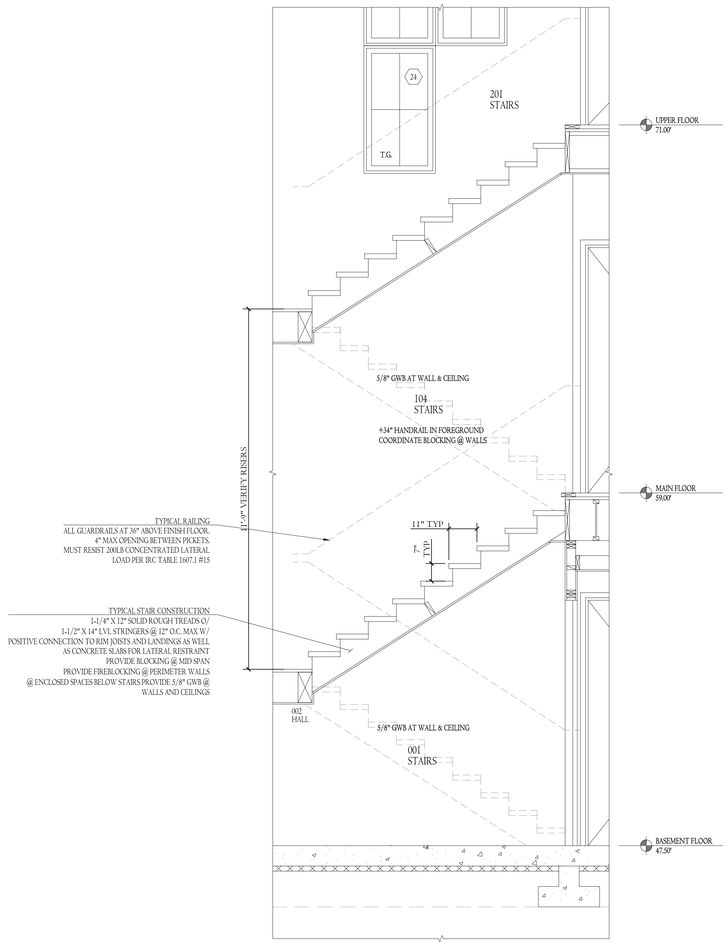

1 STAIR DETAIL AT ENTRY
SCALE: 1/2" = 1'-0"

GENERAL STAIR NOTES:

1. RISER HEIGHT TO BE 7-3/4" MAX (7" MAX PREFERRED - VERIFY EACH RUN)
2. TREAD RUN TO BE 11" STANDARD THIS PROJECT (10" MIN AS NECESSARY)
3. STAIR WIDTH AND LANDING LENGTH TO BE 36" MIN
4. HANDGRASP WIDTH TO BE 1-1/4" MIN AND 2" MAX
5. HANDGRASP TO HAVE A MIN CLEAR SPACE TO WALL SURFACE OF 1-1/2"
6. HANDGRASP TO PROJECT INTO STAIRWAY 3-1/2" MAX
7. TOP OF HANDGRASP TO BE 34" MIN AND 38" MAX ABOVE NOSINGS
8. HANDGRASPS TO BE CONTINUOUS FROM FIRST TO LAST NOSING
9. HANDGRASPS TO RETURN TO WALL OR TERMINATE AT A NEWEL POST (COORDINATE BLOCKING AT STUDS PRIOR TO SHEETROCK)
10. HANDRAILS (SLOPED) AND GUARDRAILS (LEVEL) TO BE CAPABLE OF WITHSTANDING A 200# FORCE AT ANY POINT IN ANY DIRECTION
11. HANDRAIL AND GUARDRAIL MEMBERS TO BE SPACED SO AS TO PROHIBIT THE PASSING OF A 4" DIA SPHERE THROUGH RAILING AT ANY POINT
12. GUARDRAILS TO BE 36" MIN ABOVE FINISH FLOOR
13. NEWELL POSTS TO BE INCLUDED IN MILLWORK SHOP DRAWINGS TO INSURE ADEQUATE POSITIVE SECURING TO STRUCTURAL FRAMING
14. HALF TREAD/CARPET DETAILS TO BE COORDINATED WITH MILLWORK PACKAGE
15. VERIFY FINISH FLOOR TO FINISH FLOOR ELEVATION IN ORDER TO COORDINATE RISER HEIGHT AND RUN LENGTH
16. PROVIDE PROPER FIREBLOCKING & DRAFTSTOPPING AS WELL AS POSITIVE CONNECTIONS TO RIM JOISTS AS WELL AS TO CONCRETE SLAB FLOORS

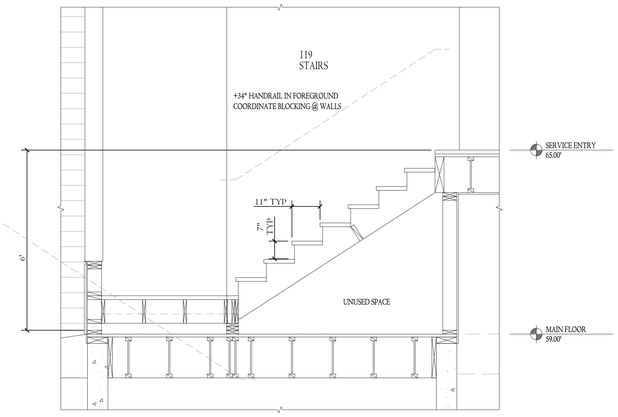

2 STAIR DETAIL AT SERVICE STAIR
SCALE: 1/2" = 1'-0"

RF ARCHITECTURE
PH: (253) 359-4039
RICHARD@RFARCHITECTURE.COM
7421 214TH AVE E BONNEYLAKE, WA 98391

6080
REGISTERED ARCHITECT
RICHARD W. FLAKE
STATE OF WASHINGTON

All drawings, specifications, plans, ideas, arrangements, and designs represented or referred to are the property of and owned by Richard Flake Architect in whether the project for which they are made is executed or not. They were created, evolved, developed and produced for sole use on and in connection with this project and none of the above may be disclosed or given to or used by any person, firm, or corporation for any use or purpose whatsoever including any other project, except upon written permission of Richard Flake Architect.

Copyright 2023
Richard Flake Architect

MURRAY RESIDENCE
NEW SINGLE FAMILY RESIDENCE
4803 FOREST AVE
MERCER ISLAND, WA 98040

DESIGN:
RWF
DRAWN:
HAVILAND CONSULTING
CHECKED:
RWF
REVISIONS:
1 PER CITY REVIEW
10-22-2021
REVISIONS
2 PER CITY REVIEW
8-8-2023
REVISIONS

September 15, 2023

1 A-10.1

TREMCO
Commercial Sealants & Waterproofing

TREMproof® TWS
Triple Waterproofing System

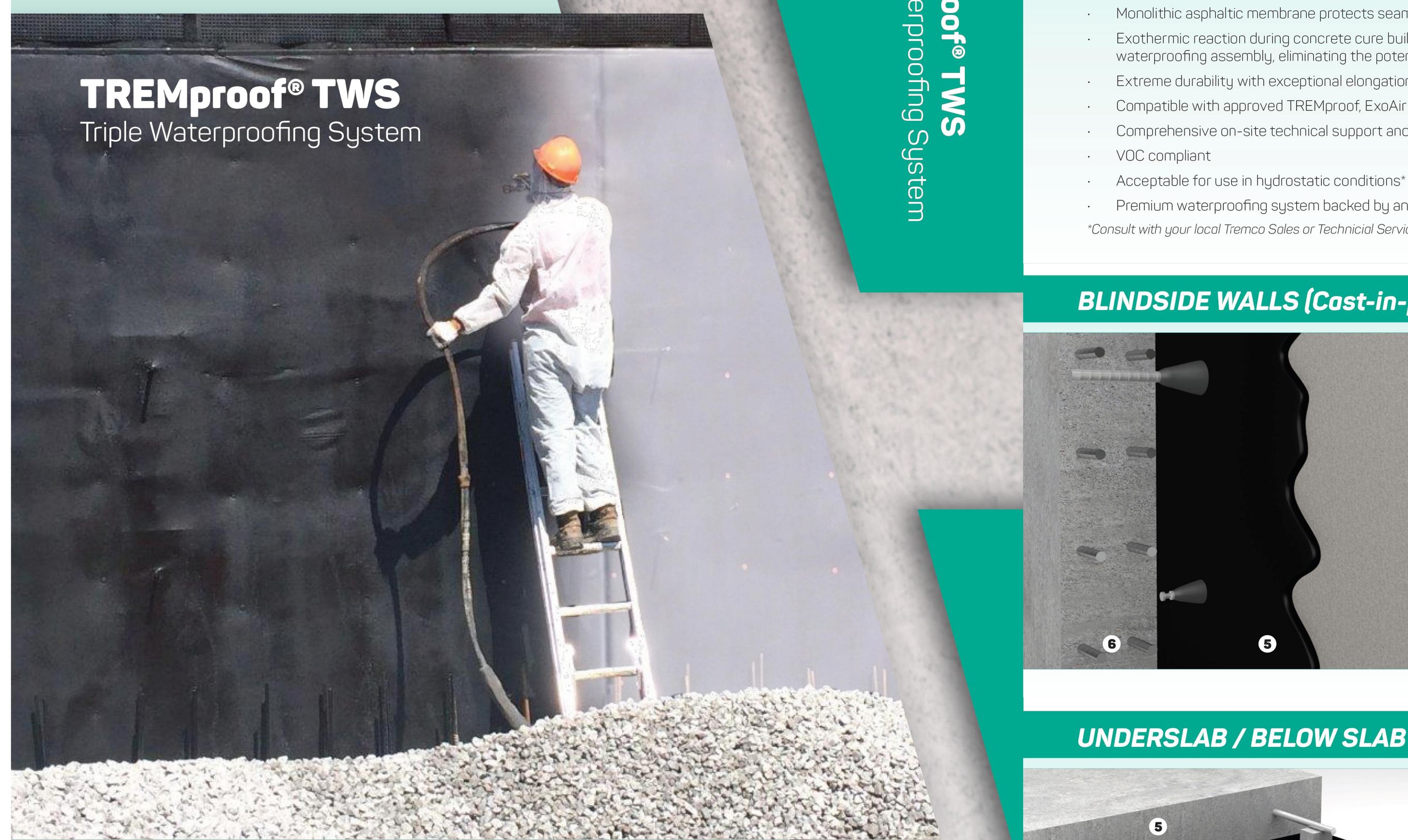

TREMproof® TWS is a blindside and underslab triple-layer waterpoofing assembly consisting of 20 mils of HDPE, expandable granular bentonite and a protective layer of spun-bonded polyester, coated with 60 dry mils of polymer-enhanced, liquid-applied asphalt membrane.

This durable waterproofing system creates a physical bond to the concrete that eliminates the possibility of lateral water movement between the membrane and the structure. TWS provides superior defense against inclement weather conditions, preventing bentonite hydration prior to concrete placement.

TREMproof® TWS
Triple Waterproofing System

FEATURES AND BENEFITS

- Innovative triple-layer waterproofing assembly, tested per ASTM standards
- Protected bentonite allows for longer exposure to weather and construction elements
- Monolithic asphaltic membrane protects seams and seals penetrations reducing time required for detail work
- Exothermic reaction during concrete cure builds adhesion of the asphaltic membrane to the structure, creating a bonded waterproofing assembly, eliminating the potential for lateral water movement
- Extreme durability with exceptional elongation and crack-bridging characteristics
- Compatible with approved TREMproof, ExoAir and TREMDrain solutions for a continous building envelope
- Comprehensive on-site technical support and product knowledge expertise
- VOC compliant
- Acceptable for use in hydrostatic conditions*
- Premium waterproofing system backed by an all-inclusive warranty *

*Consult with your local Tremco Sales or Technicial Services Representative for more information.

BLINDSIDE WALLS (Cast-in-place and shotcrete)

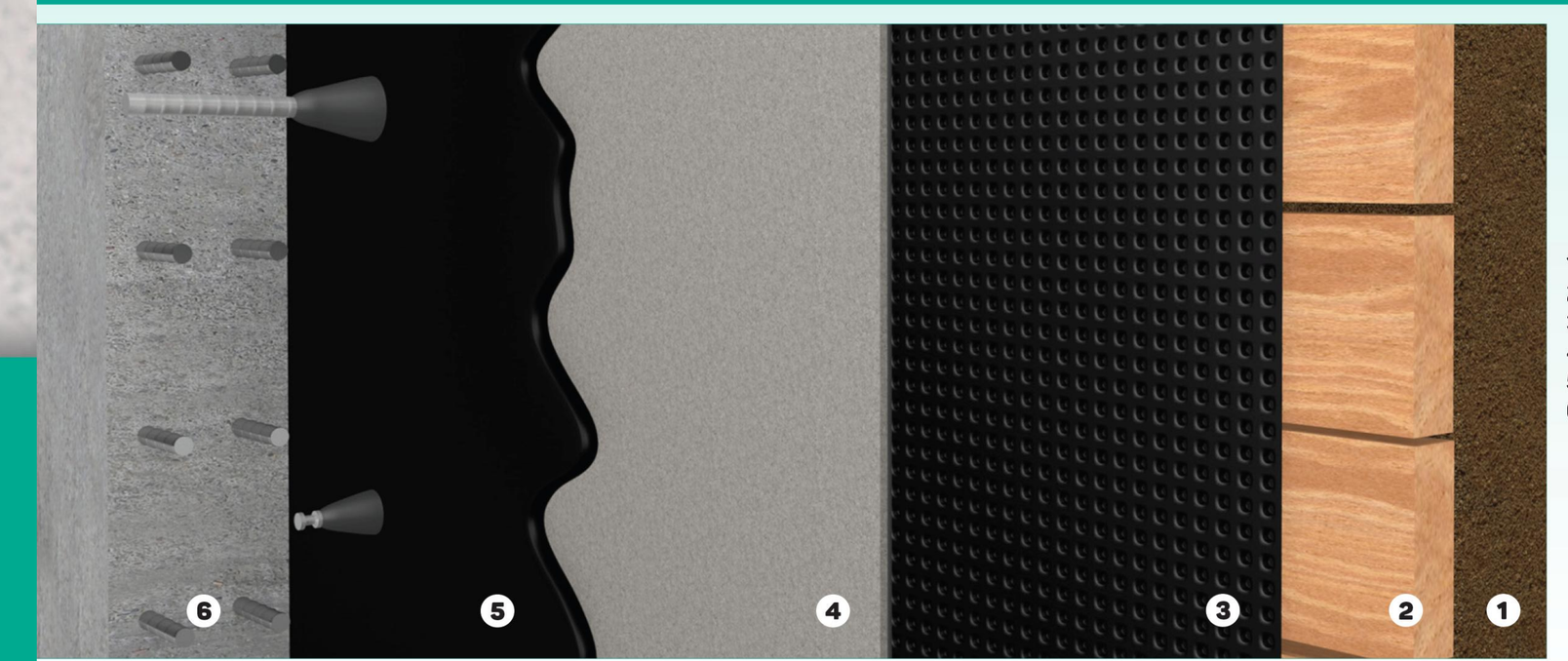

1 Retained earth
2 Shoring
3 TREMDrain system
4 Paraseal system
5 TREMproof 260
6 Shotcrete / concrete

UNDERSLAB / BELOW SLAB ON GRADE

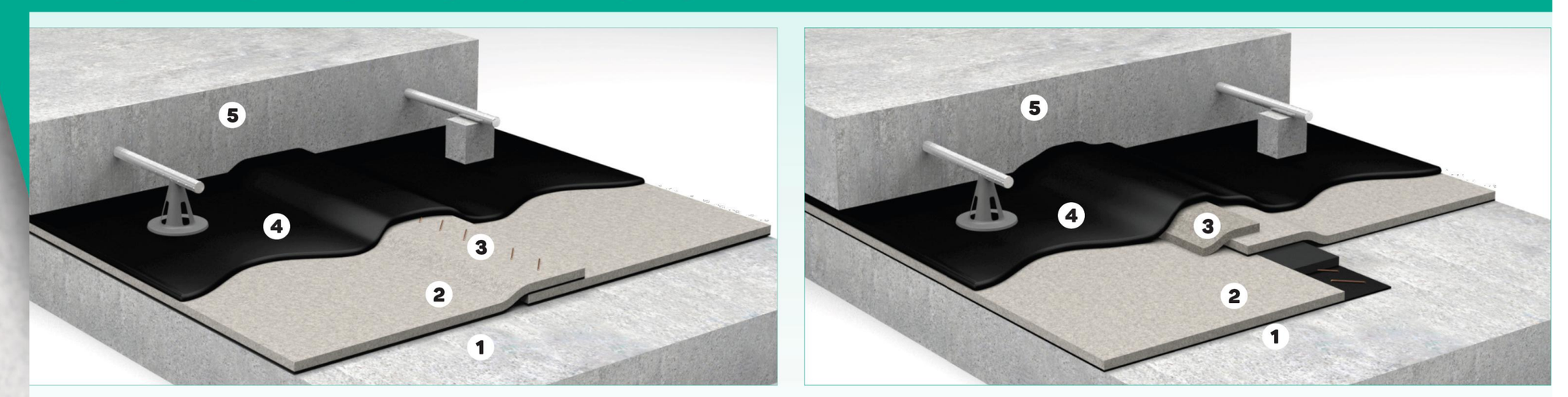

1 Concrete or compacted base
2 Paraseal system
3 Staples
4 TREMproof 260
5 Concrete

1 Concrete or compacted base
2 Paraseal system
3 Para Stick 'n' Dry
4 TREMproof 260
5 Concrete

TREMCO Commercial Sealants & Waterproofing

TREMproof® Triple Waterproofing System (TWS)
TREMproof 260 Sprayed over Paraseal Waterproofing Membranes

System Description
TREMproof® Triple Waterproofing System (TWS) is a blindside and underslab triple-layer waterproofing assembly consisting of 20 mils of HDPE, expandable granular bentonite and a protective layer of spun-bonded polyester, coated with 60 dry mils of polymer-enhanced, liquid-applied asphalt membrane. This durable waterproofing system creates a physical bond to the concrete that eliminates the possibility of lateral water movement between the membrane and the structure. TWS provides superior defense against inclement weather conditions, preventing bentonite hydration prior to concrete placement.

Paraseal® LG is a sheet waterproofing membrane consisting of 20 mils of HDPE, expandable granular bentonite and a protective layer of spun-bonded polyester for non-submerged conditions.

Paraseal® GM/LG (20 mil) is a sheet waterproofing and methane-mitigating membrane consisting of 20 mils of HDPE, expandable granular bentonite and a protective layer of spun-bonded polyester for submerged conditions*.

TREMproof® 260 is a polymer-enhanced, co-sprayed asphalt emulsion, below-grade waterproofing membrane.
Also available with 60 mil HDPE. Please consult your local Tremco Sales Representative for more information.

Basic Uses
- Blindside walls (Cast-in-place and shotcrete)
- Under-slab/below slab on grade
- Hydrostatic conditions*

Consult Tremco Technical Services for more information.

Features & Benefits
- Innovative triple-layer waterproofing assembly, tested per ASTM standards
- Protected bentonite allows for longer exposure to weather and construction elements
- Monolithic asphaltic membrane protects seams and seals penetrations reducing time required for detail work
- Exothermic reaction during concrete cure builds adhesion of the asphaltic membrane to the structure, creating a bonded waterproofing assembly, eliminating the potential for lateral water movement
- Extreme durability with exceptional elongation and crack-bridging characteristics
- Compatible with approved TREMproof, ExoAir and TREMDrain solutions for a continous building envelope
- Comprehensive on-site technical support and product knowledge expertise
- VOC compliant
- Premium waterproofing system backed by an all-inclusive warranty* *Consult with your local Tremco Sales Representative for more information.*

Availability
TREMproof TWS is immediately available from your local Tremco Sales Representative, Tremco Distributor or Tremco Warehouse.

Packaging
Paraseal Systems 4' x 24' (1.2 M x 7.3 M) rolls, 20 rolls/pallet
TREMproof 260 SP 55-gal (208-L) drum containing (52 gal (197 L) of TREMproof 260), 4 drums/pallet
TREMproof 260 SP 330-Gallon (1,249-L) tote, 1 tote/pallet
TREMproof 260 R 5-gallon (19-L) pail, 36 pails/pallet

Limitations
- Limit UV exposure to a maximum of 90 days.
- Do not let the product freeze prior to being applied to the substrate. It is best to store TREMproof 260 off the floor at an ambient temperature above 50 °F (10 °C). Opened drums should be tightly sealed before storage.
- When applying TREMproof 260 below 40 °F (4 °C), contact your local Tremco Sales Representative or Tremco Technical Services.
- TREMproof 260 is not for use with potable water.
- Protect Paraseal systems from moisture. Store on a skid or pallet and cover with polyethylene or tarp. Do not double stack pallets. Prevent hydration of bentonite until the sheet is installed and under recommended compaction.
- Paraseal products require a minimum of 24 psf of compaction/confinement in order to function as designed.
- Paraseal systems are not to be installed over ponding or standing water or snow.
- If ground water is brackish, please contact your local Tremco Sales Representative four weeks prior to a pending application, and provide a water and/or soil sample for testing purposes in order to determine the correct bentonite formula for your project's application.
- Paraseal LG is not for use in submerged conditions.
- Use of Paraseal GM/LG - 20 mil submerged conditions requires prior approval from Tremco.

Warranty
Tremco warrants its Products to be free of defects in materials but makes no warranty as to appearance or color. Since methods of application and on-site conditions are beyond our control and can affect performance, Tremco makes no other warranty, expressed or implied, including warranties of MERCHANTABILITY and FITNESS FOR A PARTICULAR PURPOSE with respect to Tremco Products. Tremco's sole obligation shall be, at its option, to replace or to refund the purchase price of the quantity of Tremco Products proven to be defective, and Tremco shall not be liable for any loss or damage.

Please refer to our website at www.tremcosealants.com for the most up-to-date Product Data Sheets.

NOTE: All Tremco Safety Data Sheets (SDS) are in alignment with the Globally Harmonized System of Classification and Labelling of Chemicals (GHS) requirements.

TREMCO Commercial Sealants & Waterproofing

TREMproof® Triple Waterproofing System (TWS)
TREMproof 260 Sprayed over Paraseal Waterproofing Membranes

PARASEAL LG TYPICAL PHYSICAL PROPERTIES

PROPERTY	DESCRIPTION		
Color (Bentonite/HDPE)	Gray/Black		
Installation Temperatures	-25 to 130 °F (-31.7 to 54.4 °C)		
Freeze/Thaw Cycles	No effect before or after installation		
Resistance to Chemicals & Gases	Extremely high resistance. Contact Tremco for specific information.		
Life Expectancy	Indefinite		
PROPERTY	**TEST METHOD**	**VALUES US**	**VALUES SI**
Elongation	ASTM D412 Type 4 Dumbbell	700%	
Strength at Break	ASTM D412	4,000 lb/in²	281.22 kg/cm²
Strength at Break	ASTM D6693, Type IV	80 lb/in	14.28 kg/cm
Resistance to Micro-organisms (bacteria, fungi, mold, yeast)	ASTM D4068	Unaffected	
Index Puncture Resistance	ASTM D4833	36.67 lb/ft	54.57 kg/M
Resistance to Hydrostatic Head Pressure	ASTM D5385	231' of H_2O	
Hydrostatic Resistance	ASTM D5385	>100+ psi (>231 ft/H_2O)	
Permeance	ASTM E96	0.029 US Perms	1.7 ng/Pa·s·m²
Puncture Resistance (load)	ASTM E154	155 lbf	689.47 N

All data based on 20-mil HDPE

PARASEAL GM/LG 20 MIL TYPICAL PHYSICAL PROPERTIES

PROPERTY	DESCRIPTION		
Color (Bentonite/HDPE)	Gray/Black		
Installation Temperatures	-25 to 130 °F (-31.7 to 54.4 °C)		
Freeze/Thaw Cycles	No effect before or after installation		
Resistance to Chemicals & Gases	Extremely high resistance. Contact Tremco for specific information.		
Life Expectancy	Indefinite		
PROPERTY	**TEST METHOD**	**VALUES US**	**VALUES SI**
Elongation	ASTM D412 Type 4 Dumbbell	700%	
Strength at Break	ASTM D412	4,000 lb/in²	281.22 kg/cm²
Strength at Break	ASTM D6693, Type IV	80 lb/in	14.28 kg/cm
Resistance to Micro-organisms (bacteria, fungi, mold, yeast)	ASTM D4068	Unaffected	
Index Puncture Resistance	ASTM D4833	36.67 lb/ft	54.57 kg/M
Resistance to Hydrostatic Head Pressure	ASTM D5385	231' of H_2O	
Hydrostatic Resistance (with Para JT™ Tape)	ASTM D5385	>100 psi (>231 ft/H_2O)	(>68.9 N/cm²) (>70.4 M/H_2O)
Permeance	ASTM E96	0.029 US Perms	1.7 ng/Pa·s·m²
Puncture Resistance (load)	ASTM E154	155 lbf	689.47 N

All data based on 20-mil HDPE

TREMproof® Dual Waterproofing System TREMproof TRA Sheeting Embedded in TREMproof 250GC

TREMPROOF 260 TYPICAL PHYSICAL PROPERTIES

PROPERTY	DESCRIPTION	
Type	Polymer-Modified emulsion	
Color	Black	
Solids	64%	
Density	8.1 lb/gal	
Application	Sprayer/Roller	
Cure Time	16 to 24 hr at 75 °F (24 °C), 50% RH	
Thickness	Minimum 100 mils (wet), 60 mils (dry)	
PROPERTY	**TEST METHOD**	**TYPICAL VALUES**
Water Resistance	ASTM C836; AATC-127	Pass
Adhesion-in-Peel after Water Immersion (Unprimed)	ASTM C836; ASTM C 794	Exceeds
Low-Temp Flexibility	ASTM C836; ASTM C 836	Pass
Weight Loss 20% maximum Loss 80% Solids minimum	ASTM C836; ASTM C 1250	
Low Temperature Crack Bridging	ASTM C836; ASTM C1305	Pass**
Elongation	ASTM D412	800%
Peel Adhesion	ASTM D903	Passes
Extension after heat aging No observable cracking	ASTM C836; ASTM C1522	
Hardness, Type 00 50 Min.	ASTM C836; ASTM D 2240	Passes
Water Vapor Permeance	ASTM C836; ASTM E96 Dry Cup	0.09 US Perms
	ASTM C836; ASTM E96 Wet Cup	1.70 US Perms
	ASTM C836; ASTM E96 Inverted Wet Cup	
Maximum V.O.C.	Method 310	72 g/L
Shelf Life Stability 6 Months Minimum		
Application Temperature		Above 40 °F (5 °C) and rising. If installing below 40 °F (5 °C), please refer to additional application instructions in Cold Weather Technical Bulletin or contact Tremco Technical Service at 866-209-2404.
Storage Temperature		40 to 100 °F (5 to 37 °C)

0516/TPTWSDS-BG

Tremco Commercial Sealants & Waterproofing
3735 Green Rd, Beachwood OH 44122, 216.292.5000 / 800.321.7906
1451 Jacobson Ave, Ashland OH 44805, 419.289.2050 / 800.321.6357
220 Wicksteed Ave, Toronto ON M4H1G7, 416.421.3300 / 800.363.3213
1445 Rue de Coulomb, Boucherville QC J4B 7L8, 514.521.9555

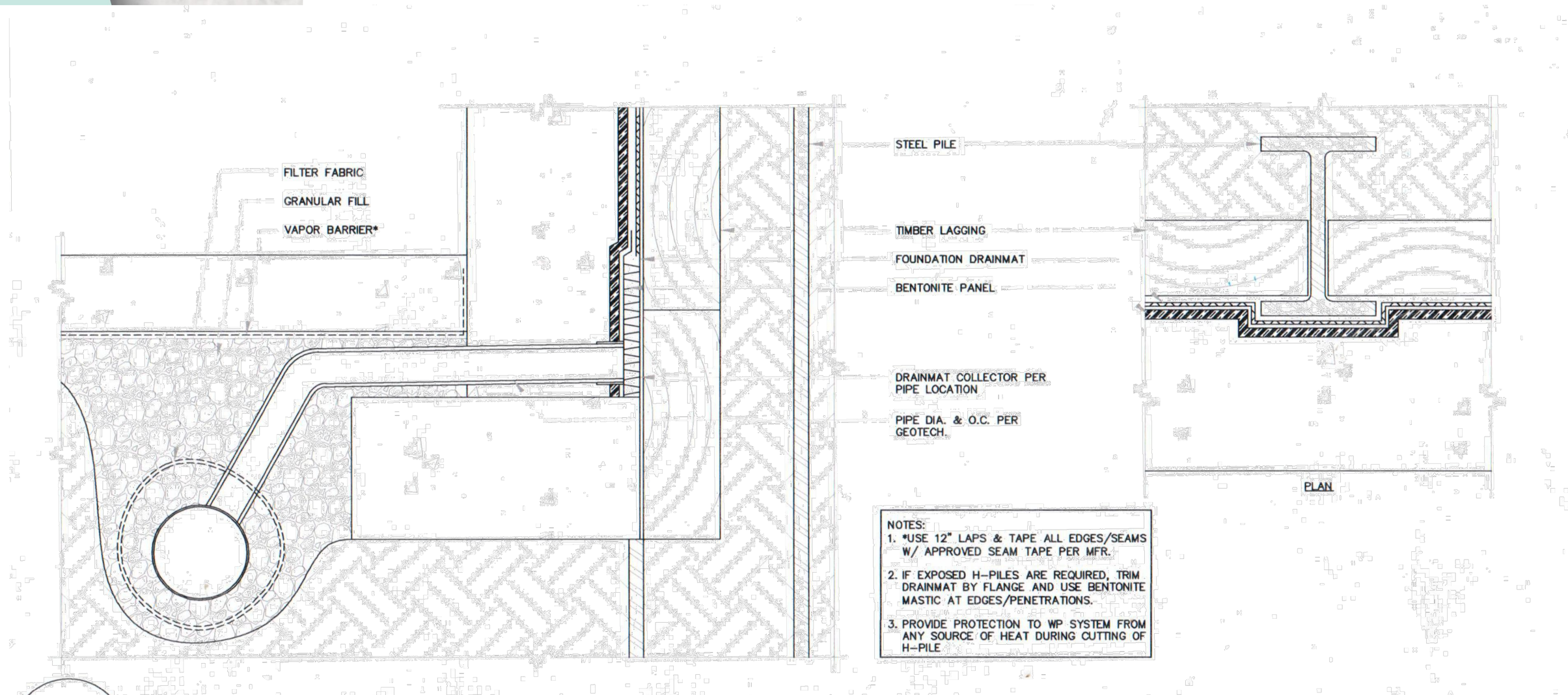

100 REF. ARCH — SECTION: PERIMETER SHORING WALL - TIMBER LAG W/ BENTONITE PANEL

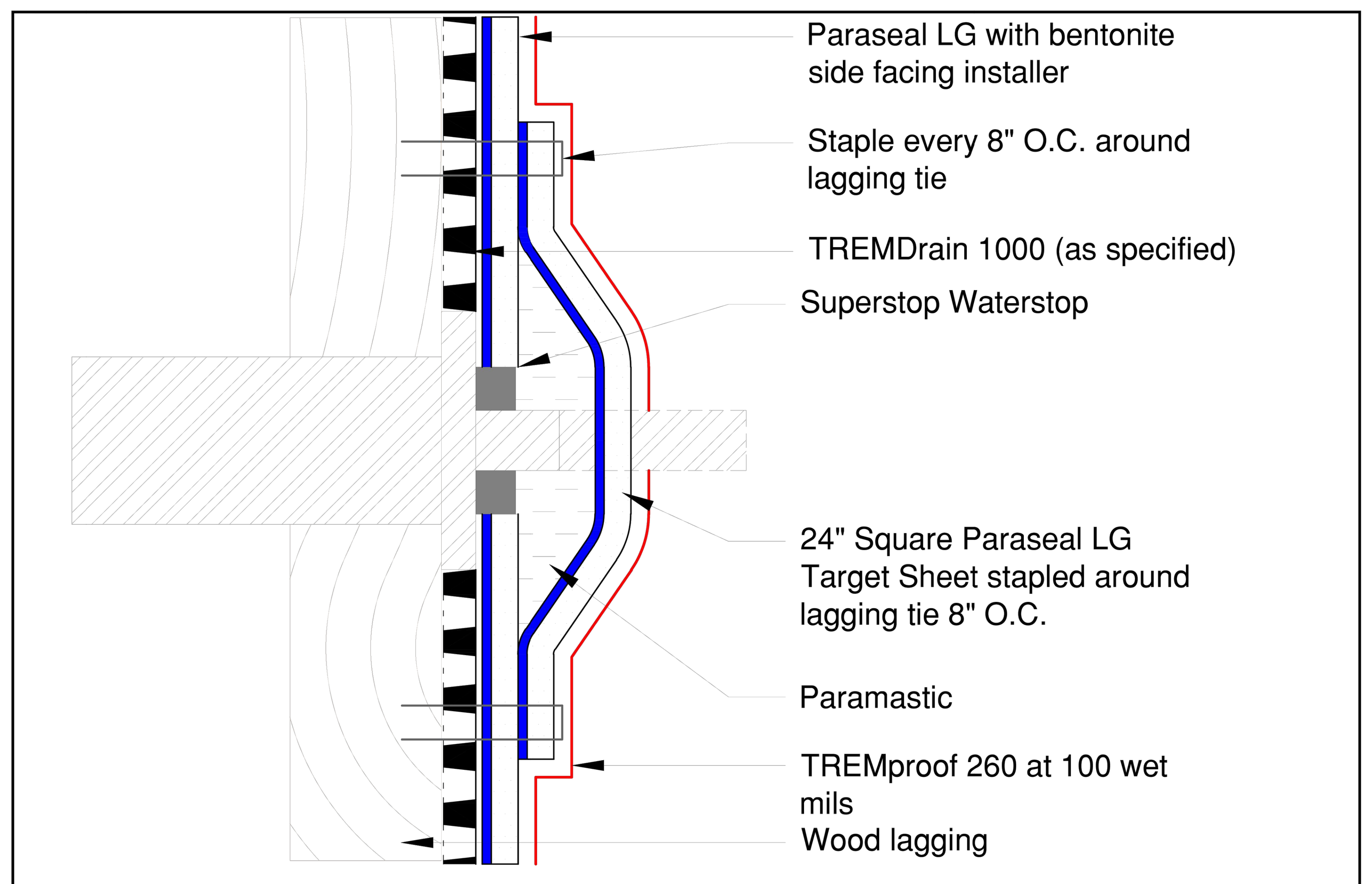

NOTE: Paraseal products require a min of 24 PSF of compaction/confinement in order to function as designed.

TREMCO www.tremcosealants.com 3735 Green Road * Beachwood, OH 44122 Phone: 866-209-2404 * Fax: 216-766-5535	Detail: TREMproof TWS INSTALLATION AT LAGGING TIES	Sheet Number:	File Name: TWS-BSW-14	Rev # 00
	This detail is intended for conceptual purposes only. Drawn by: MI Checked by: AC Scale: None	Date: 5/27/2016		

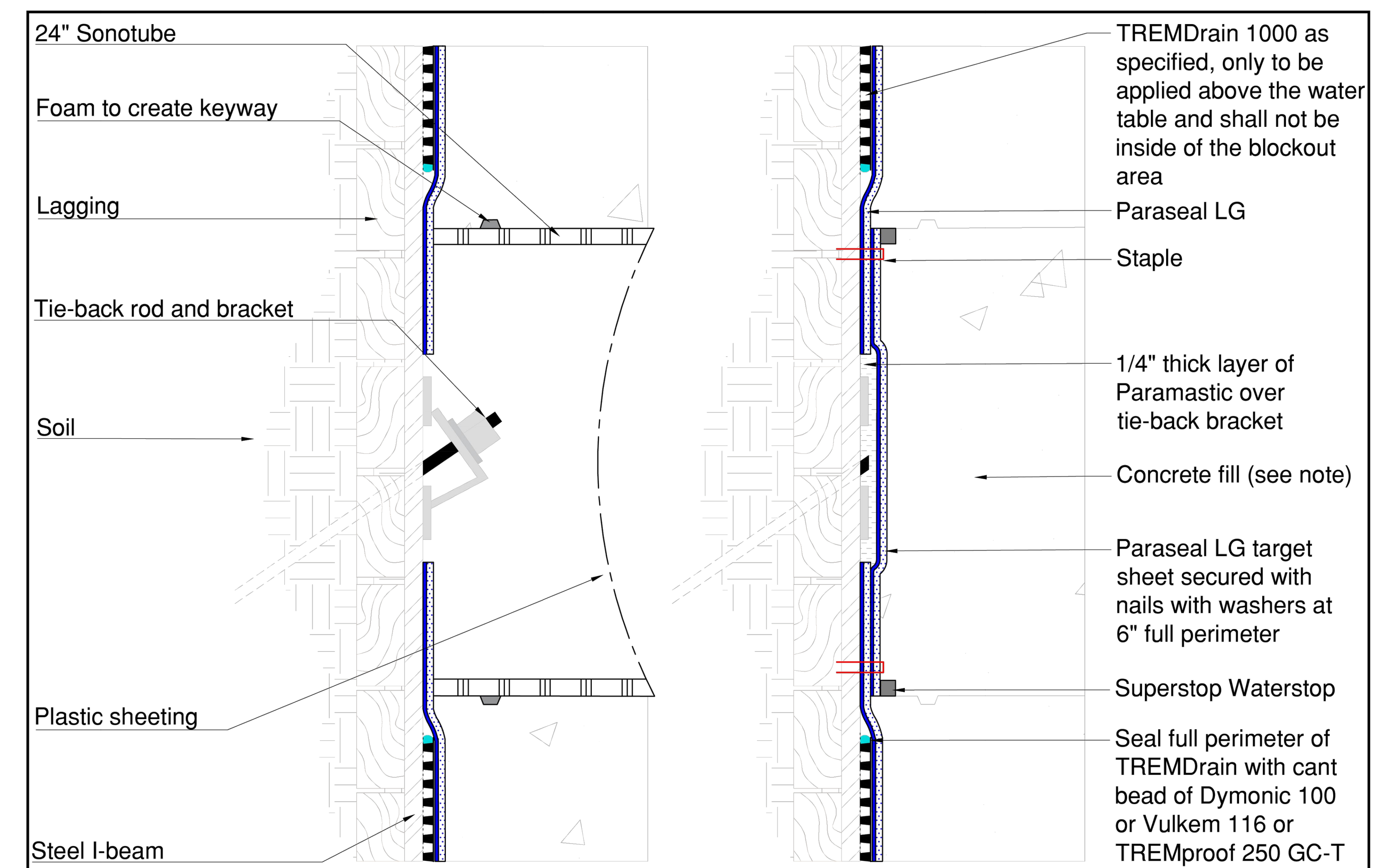

Note: Paraseal products require a min of 24 PSF of compaction/confinement in order to function as designed.
Note: In submerged conditions blockouts must be filled with grout or concrete only; no shotcrete.

TREMCO www.tremcosealants.com 3735 Green Road * Beachwood, OH 44122 Phone: 866-209-2404 * Fax: 216-766-5535	Detail: DETENTIONED TIE-BACK - BLOCKOUT METHOD USING 24" SONOTUBE	Sheet Number:	File Name: BSW-26-LG20	Rev # 00
	This detail is intended for conceptual purposes only. Drawn by: MI Checked by: JM Scale: None	Date: 5/24/2016		

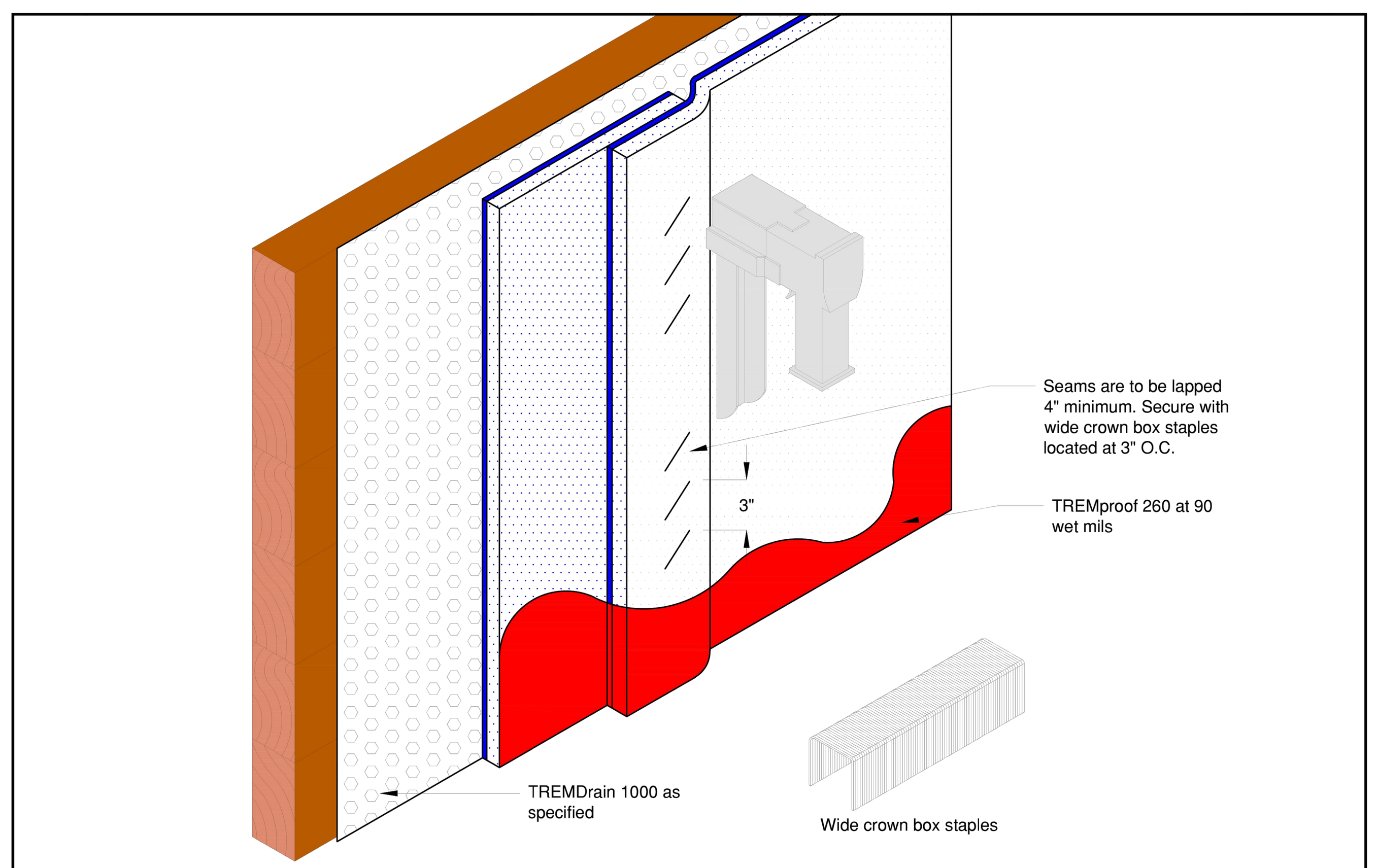

NOTE: Fasteners not located in the seam area shall be driven through a piece of Superstop Waterstop or Parastick N Dry; otherwise, fastener heads are to be covered with Parastick N Dry that is adhered with Paraprimer.
NOTE: Paraseal products require a min of 24 PSF of compaction/confinement in order to function as designed.

TREMCO www.tremcosealants.com 3735 Green Road * Beachwood, OH 44122 Phone: 866-209-2404 * Fax: 216-766-5535	Detail: TREMproof TWS - TYPICAL SEAM AT BLINDSIDE LAGGING WALL	Sheet Number:	File Name: TWS-BSW-04	Rev # 00
	This detail is intended for conceptual purposes only. Drawn by: MI Checked by: AC Scale: None	Date: 5/27/2016		

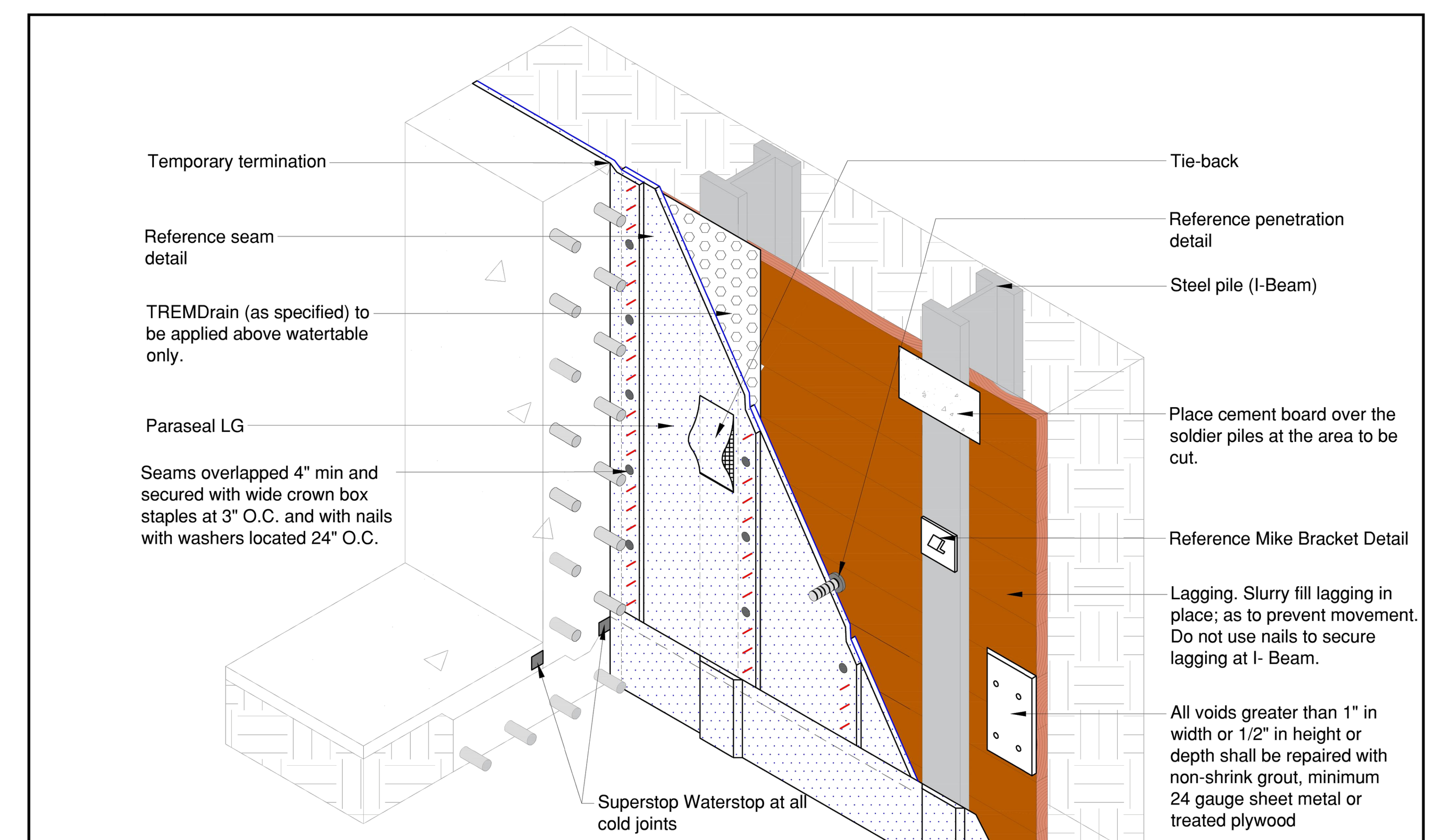

NOTE: Paraseal products require a min of 24 PSF of compaction/confinement in order to function as designed.
NOTE: Not recommended for use in submerged conditions.
NOTE: All fasteners shall be located in the seam area. Fasteners not located in the seam areas shall be driven through or covered by Parastick N Dry that is adhered with Paraprimer.

TREMCO www.tremcosealants.com 3735 Green Road * Beachwood, OH 44122 Phone: 866-209-2404 * Fax: 216-766-5535	Detail: BLINDSIDE LAGGING WALL	Sheet Number:	File Name: BSW-01-LG20	Rev # 00
	This detail is intended for conceptual purposes only. Drawn by: MI Checked by: JM Scale: None	Date: 5/24/2016		

RF ARCHITECTURE
PH: (253) 359-4039
RICHARD@RFARCHITECTURE.COM
7421 214TH AVE E BONNEYLAKE, WA 98391

6080 REGISTERED ARCHITECT RICHARD W. FLAKE STATE OF WASHINGTON

All drawings, specifications, plans, ideas, arrangements, and designs represented or referred to are the property of and owned by Richard Flake Architect in whether the project for which they are made is executed or not. They were created, evolved, developed and produced for sole use on and in connection with this project and none of the above may be disclosed or given to or used by any person, firm, or corporation for any use or purpose whatsoever including any other project, except upon written permission of Richard Flake Architect.

Copyright 2023
Richard Flake Architect

MURRAY RESIDENCE
NEW SINGLE FAMILY RESIDENCE
4803 FOREST AVE SE
MERCER ISLAND, WA 98040

DESIGN: RWF
DRAWN: HAVILAND CONSULTING
CHECKED: RWF
REVISIONS:
1 PER CITY REVIEW 10-22-2021
REVISIONS
2 PER CITY REVIEW 8-8-2023
REVISIONS

September 15, 2023

1 A-II.I

*NOTE:
CONTRACTOR SHALL CONFIRM COMPATIBILITY OF ALL MATERIALS USED IN PENETRATION FLASHING SEQUENCE.

USE SIMILAR METHODS AT EACH BUILDING PENETRATION.

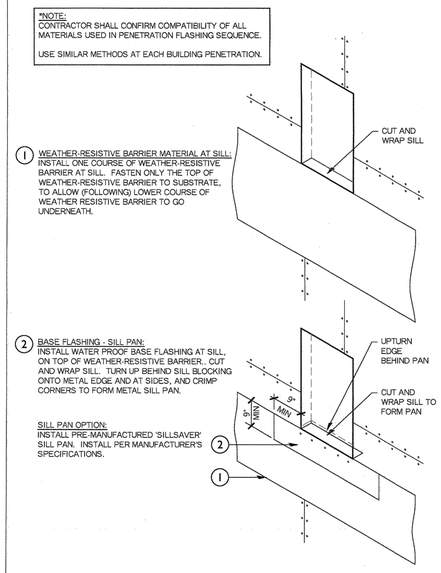

1 WEATHER-RESISTIVE BARRIER MATERIAL AT SILL:
INSTALL ONE COURSE OF WEATHER-RESISTIVE BARRIER AT SILL. FASTEN ONLY THE TOP OF WEATHER-RESISTIVE BARRIER TO SUBSTRATE, TO ALLOW (FOLLOWING) LOWER COURSE OF WEATHER RESISTIVE BARRIER TO GO UNDERNEATH.

2 BASE FLASHING - SILL PAN:
INSTALL WATER PROOF BASE FLASHING AT SILL, ON TOP OF WEATHER-RESISTIVE BARRIER., CUT AND WRAP SILL. TURN UP BEHIND SILL BLOCKING ONTO METAL EDGE AND AT SIDES, AND CRIMP CORNERS TO FORM METAL SILL PAN.

SILL PAN OPTION:
INSTALL PRE-MANUFACTURED 'SILLSAVER' SILL PAN. INSTALL PER MANUFACTURER'S SPECIFICATIONS.

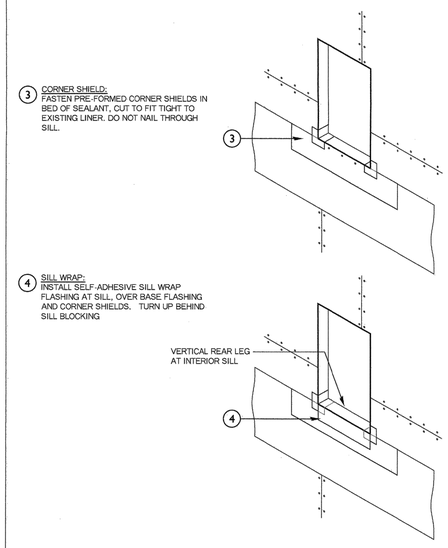

3 CORNER SHIELD:
FASTEN PRE-FORMED CORNER SHIELDS IN BED OF SEALANT, CUT TO FIT TIGHT TO EXISTING LINER. DO NOT NAIL THROUGH SILL.

4 SILL WRAP:
INSTALL SELF-ADHESIVE SILL WRAP FLASHING AT SILL, OVER BASE FLASHING AND CORNER SHIELDS. TURN UP BEHIND SILL BLOCKING

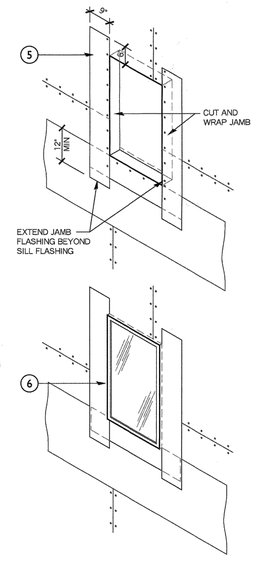

5 VERTICAL BASE FLASHING-JAMB:
INSTALL VERTICAL SELF-ADHESIVE MEMBRANE BASE FLASHING OVER SILL FLASHING. CUT AND WRAP JAMB. EXTEND 6" MINIMUM ABOVE AND 12" MINIMUM BELOW ROUGH OPENING.

NOTE:
PRIOR TO SEALANT APPLICATION,
- CLEAN WINDOW NAILING FLANGE
- CLEAN AND PREP SUBSTRATE AND FLASHINGS.

6 INSTALL WINDOW IN OPENING:
INSTALL WINDOW IN OPENING PER MANUFACTURER'S SPECIFICATIONS.

CAULK WINDOW RIM :
INSTALL CAULKING AFTER SIDING AND SILL FLASHING ARE INSTALLED. APPLY CONTINUOUS BEAD OF SILICONE CAULKING BETWEEN SIDES AND BOTTOM OF WINDOW FRAME AND OPENING. MAKE SURE THAT WINDOW WEEP SLOTS ARE FREE.

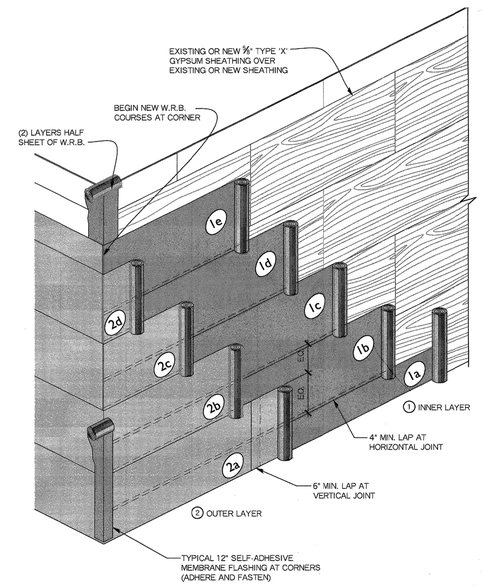

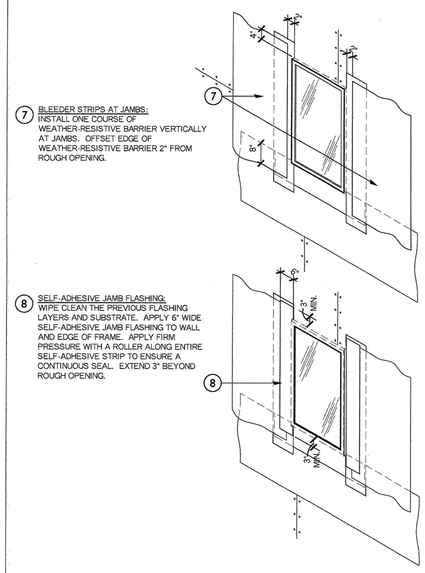

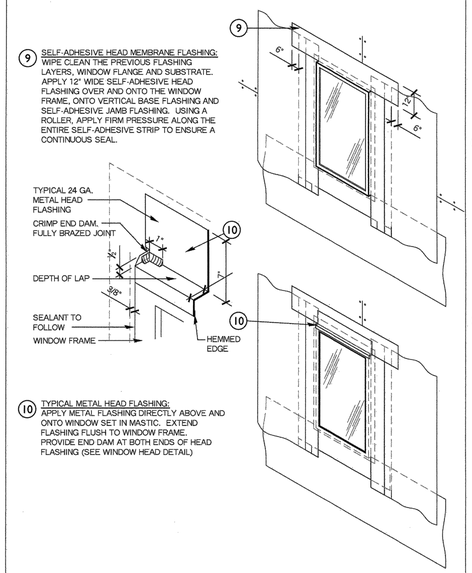

9 SELF-ADHESIVE HEAD MEMBRANE FLASHING:
WIPE CLEAN THE PREVIOUS FLASHING LAYERS, WINDOW FLANGE AND SUBSTRATE. APPLY 12" WIDE SELF-ADHESIVE HEAD FLASHING OVER AND ONTO THE WINDOW FRAME, ONTO VERTICAL BASE FLASHING AND SELF-ADHESIVE JAMB FLASHING. USING A ROLLER, APPLY FIRM PRESSURE ALONG THE ENTIRE SELF-ADHESIVE STRIP TO ENSURE A CONTINUOUS SEAL.

10 TYPICAL METAL HEAD FLASHING:
APPLY METAL FLASHING DIRECTLY ABOVE AND ONTO WINDOW SET IN MASTIC. EXTEND FLASHING FLUSH TO WINDOW FRAME. PROVIDE END DAM AT BOTH ENDS OF HEAD FLASHING (SEE WINDOW HEAD DETAIL)

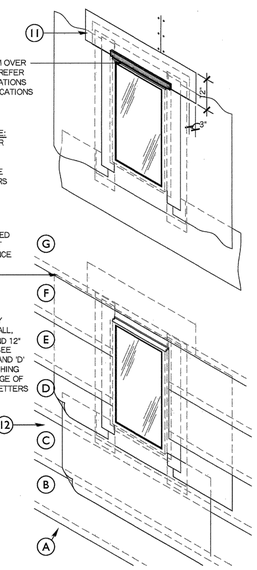

11 WATERPROOF HEAD FLASHING MEMBRANE:
INSTALL SELF-ADHESIVE MEMBRANE OVER METAL HEAD FLASHING. APPLY FIRM PRESSURE WITH A ROLLER ALONG THE ENTIRE SELF-ADHESIVE STRIP TO ENSURE A CONTINUOUS SEAL. FASTEN AT CORNERS AND MIDPOINTS.

12 WEATHER-RESISTIVE BARRIER:
START AT THE BOTTOM OF THE WALL, LAY WEATHER-RESISTIVE BARRIER UP THE WALL, OVERLAPPING ½ ROLL + 6" MIN. HORIZ. AND 12" VERTICAL IN WEATHERBOARD FASHION, SEE DETAIL 8. MAKE SURE THAT COURSE 'C' AND 'D' ARE PLACED UNDER THE SILL STRIP FLASHING AND JAMB FLASHING. ALIGN VERTICAL EDGE OF W.R.B. WITH SIDES OF HEAD FLASHING (LETTERS REFER TO ORDER OF INSTALLATION)

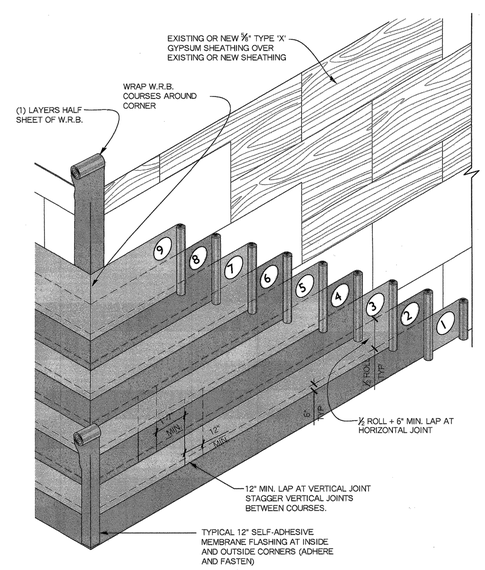

RF ARCHITECTURE
PH: (253) 359-4039
RICHARD@RFARCHITECTURE.COM
7421 214TH AVE E BONNEYLAKE, WA 98391

6080
REGISTERED ARCHITECT
RICHARD W. FLAKE
STATE OF WASHINGTON

All drawings, specifications, plans, ideas, arrangements, and designs represented or referred to are the property of and owned by Richard Flake Architect in whether the project for which they are made is executed or not. They were created, evolved, developed and produced for sole use on and in connection with this project and none of the above may be disclosed or given to or used by any person, firm, or corporation for any use or purpose whatsoever including any other project, except upon written permission of Richard Flake Architect.

Copyright 2023
Richard Flake Architect

RESIDENCE
WA 98040

MURRAY RESIDENCE
NEW SINGLE FAMILY RESIDENCE
MERCER ISLAND, WA

DESIGN: RWF
DRAWN: HAVILAND CONSULTING
CHECKED: RWF

REVISIONS:
1 PER CITY REVIEW 10.23.2023
REVISIONS
2 PER CITY REVIEW 8.8.2023
REVISIONS

September 15, 2023

1 A-11.2

ROOM FINISH SCHEDULE

		FLOOR FINISH		WALL FINISH				CEILING FINISH	REMARKS
MARK	ROOM NAME	FLOOR	BASE	NORTH	EAST	SOUTH	WEST	CEILING	

PART 2 - PRODUCTS

2.1 MANUFACTURERS

A. Basis-of-Design Product: Subject to compliance with requirements, provide Kolbe Windows & Doors; [**Heritage Series Folding Doors**] [**Ultra Series Folding Doors**] [**VistaLuxe Complementary Folding Doors**] or comparable product by one of the following:

1. Loewen Windows.
2. Marvin Windows and Doors.
3. <**Insert manufacturer's name**>.

2.2 PERFORMANCE REQUIREMENTS

A. Product Standard: Comply with AAMA/WDMA/CSA 101/I.S.2/A440 for minimum standards of performance, materials, components, accessories, and fabrication unless more stringent requirements are indicated.

1. Product Certification: WDMA certified with label attached to each door.

B. Performance Class and Grade: AAMA/WDMA/CSA 101/I.S.2/A440 as follows:

1. Minimum Performance Class: [**Class R**] [**Class LC**] [**Class CW**] [**Class AW**] [**As indicated on Drawings**] <**Insert class**>.

2. Minimum Performance Grade: [**Grade 15**] [**Grade 20**] [**Grade 25**] [**Grade 30**] [**Grade 35**] [**Grade 40**] [**Grade 45**] [**Grade 50**] [**As indicated on Drawings**] <**Insert grade**>.

C. Thermal Transmittance: NFRC 100 maximum total fenestration product U-factor of [**0.33 Btu/sq. ft. x h x deg F (1.87 W/sq. m x K)**] [**0.36 Btu/sq. ft. x h x deg F (2.04 W/sq. m x K)**] <**Insert value**>.

D. Solar Heat-Gain Coefficient (SHGC): NFRC 200 maximum total fenestration product SHGC of [**0.42**] [**0.40**] [**0.36**] [**0.34**] <**Insert value**>.

E. Condensation-Resistance Factor (CRF): Provide multipanel folding wood-framed glass doors tested for thermal performance in accordance with AAMA 1503, showing a CRF of [**45**] [**52**] <**Insert value**>.

F. Windborne-Debris Impact Resistance: Passes ASTM E1886 missile-impact and cyclic-pressure tests in accordance with ASTM E1996 for Wind Zone [**1**] [**2**] [**3**] [**4**] for [**basic**] [**enhanced**] protection.

1. Large-Missile Test: For glazing located within 30 ft. (9.1 m) <**Insert height**> of grade.
2. Small-Missile Test: For glazing located between 30 ft. (9.1 m) and [**60 ft. (18.3 m)**] <**Insert height**> above grade.

2.3 MULTIPANEL FOLDING WOOD-FRAMED GLASS DOORS

A. Multipanel Folding Wood-Framed Glass Doors: Provide multipanel folding wood-framed glass doors, designed for exterior use, complete with glazing, threshold, flashings, support, and anchorage devices.

1. Application: [**Exterior**] [**Interior**], outward opening.
2. Stack Storage Configuration: [**Panels open from center to both sides**] [**As indicated on Drawings**] <**Insert configuration**>.[**Hinge panels together in separate pairs.**]

B. Frames and Door Panels: Fabricate from wood components complying with AAMA/WDMA/CSA 101/I.S.2/A440 and indicated requirements. Provide factory-assembled door panels that are reglazable without dismantling panel framing, and factory-assembled frames.

1. Door Panel Design: [**Narrow-profile**] [**Standard-profile**] [**Wide-profile**] <**Insert dimensions**> design.

C. Exterior Aluminum-Clad Exterior Finish: Aluminum cladding with manufacturer's standard [**silicon modified polyester (SMP) coating complying with AAMA 2604**] [**fluoropolymer two-coat system with fluoropolymer color topcoat containing not less than 70 percent PVDF resin by weight and complying with AAMA 2605**] [**anodized coating**] [**mica coating complying with AAMA 2605**].

1. SMP or PVDF Color: [**Abalone**] [**Alabaster**] [**Anchor gray**] [**Basil**] [**Beige**] [**Bronze**] [**Camel**] [**Castlerock**] [**Chutney**] [**Cider**] [**Cloud**] [**Coal Black**] [**Coastal storm**] [**Copper canyon**] [**Corbeau**] [**Emerald isle**] [**Custom color**] [**Gingersnap**]

[**Green tea leaf**] [**Hartford green**] [**Khaki**] [**Lunar**] [**Maize**] [**Mediterranean**] [**Midnight**] [**Mystic ivy**] [**Mudpie**] [**Nutmeg**] [**Natural cotton**] [**Onyx**] [**Papaya**] [**Roma**] [**Rustic**] [**Sahara**] [**Sapphire**] [**Shadow**] [**Shale**] [**Slate**] [**Smokestack**] [**Spiced vinegar**] [**Steel gray**] [**Timberwolf**] [**Truffle**] [**Ultra pure white**] [**White**] <**Insert color**>.
2. Anodized Color: [**Black**] [**Champagne**] [**Clear**] [**Dark bronze**].
3. Mica Color: [**Cosmic gray**] [**Galaxy silver**] [**Night sky**] [**Silverstorm**].

D. Wood Exterior Finish: [**Manufacturer's standard factory-applied color finish**] [**Manufacturer's standard factory-applied latex primer**] [**Manufacturer's standard factory-applied oil primer**] [**Unfinished**].

1. Paint Color: [**Abalone**] [**Alabaster**] [**Anchor gray**] [**Basil**] [**Beige**] [**Camel**] [**Castlerock**] [**Cloud**] [**Chutney**] [**Cider**] [**Coastal storm**] [**Copper canyon**] [**Emerald isle**] [**Gingersnap**] [**Green tea leaf**] [**Hartford green**] [**Khaki**] [**Lunar**] [**Maize**] [**Mediterranean**] [**Mudpie**] [**Mystic ivy**] [**Natural cotton**] [**Nutmeg**] [**Papaya**] [**Roma**] [**Rustic**] [**Sahara**] [**Sapphire**] [**Shadow**] [**Shale**] [**Slate**] [**Smokestack**] [**Spiced vinegar**] [**Steel gray**] [**Timberwolf**] [**Truffle**] [**Ultra pure white**] [**White**].
2. Wood Species: [**Pine**] [**Alder**] [**Bamboo**] [**Cherry**] [**Mahogany**] [**Maple**] [**Knotty alder**] [**Mixed grain fir**] [**Oak**] [**Sapele**] [**Spanish cedar**] [**Vertical grain fir**] [**Walnut**] [**White oak**]<**Insert species**>.

E. Interior Surfaces: [**Unfinished**] [**Manufacturer's standard factory-applied primer**] [**Manufacturer's standard factory-applied color finish**] [**Manufacturer's standard clear coat**] [**Manufacturer's standard stain-and varnish-finish**].

1. Wood Species: [**Pine**] [**Alder**] [**Bamboo**] [**Cherry**] [**Mahogany**] [**Knotty alder**] [**Mixed grain fir**] [**Oak**] [**Sapele**] [**Spanish cedar**] [**Vertical grain fir**] [**Walnut**] [**White oak**] <**Insert species**>.
2. Wood Stain Color: [**Cherry**] [**Chestnut**] [**Coffee bean**] [**Double clear coat**] [**Ebony**] [**Library red**] [**Light oak**] [**Red wheat**] [**Spiced walnut**] [**Sunset oak**] [**Wheat**] <**Insert color**>.
3. Paint Color: [**Abalone**] [**Bright white**] [**Coal black**] [**Graystone**] [**Ivory tusk**] [**Misty gray**] [**Natural cotton**] [**Silk**] [**Ultra pure white**] <**Insert color**>.

F. Wood Components: Manufacturer's standard LVL or fine-grained wood lumber complying with AAMA/WDMA/CSA 101/I.S.2/A440; kiln-dried to a moisture content of not more than 12 percent at time of fabrication; free of visible finger joints, blue stain, knots, pitch pockets, and surface checks larger than 1/32 inch (0.8 mm) deep by 2 inches (51 mm) wide; water-repellent preservative treated.

G. Certified Wood: Wood doors to be certified as "FSC Pure"[**or "FSC Mixed Credit"**] in accordance with FSC STD-01-001 and FSC STD-40-004.

H. Certified Wood: Wood doors to be labeled in accordance with the AF&PA's Sustainable Forestry Initiative, be certified as "FSC Pure" in accordance with FSC STD-01-001 and FSC STD-40-004, or be certified and labeled in accordance with the standards of the Programme for Endorsement of Forest Certification.

I. Certified Wood: Wood doors to [**contain not less than 60 percent**] [**be made from**] certified wood tracked through a chain-of-custody process. Certified wood documentation to be provided

by sources certified through a forest certification system with principles, criteria, and standards developed using ISO/IEC Guide 59 or the World Trade Organization's "Technical Barriers to Trade."

J. Certified Wood: Wood doors to be certified in accordance with the American Tree Farm System's "AFF Standard," the AF&PA's Sustainable Forestry Initiative, FSC STD-01-001 and FSC STD-40-004, or the standards of the Programme for Endorsement of Forest Certification.

2.4 GLAZING

A. Glass and Glazing: Manufacturer's standard glazing system that produces weathertight seal. [**Comply with requirements for windborne-debris resistance**] [**Comply with requirements indicated in Section 088000 "Glazing"**] <**Insert glazing requirements**>.

1. Glass: ASTM C1036, Type 1, q3; Category II safety glass complying with testing requirements in 16 CFR 1201.
2. Safety Glazing Labeling: Permanently mark safety glazing with certification label of [**the SGCC**] [**the SGCC or another certification agency acceptable to authorities having jurisdiction**] [**or**] [**manufacturer**]. Label indicates manufacturer's name, type of glass, thickness, and safety glazing standard with which glass complies.
3. Tint: [**Clear**] [**Gray**] [**Bronze**] [**Green**] <**Insert tint**>.
4. Insulating-Glass Units: ASTM E2190[**, certified through IGCC as complying with requirements of IGCC**].

a. Filling: Fill space between glass lites with [**air**] [**argon**].
b. Lites: [**Two**] [**Three**].
c. Low-E Coating: [**Pyrolytic on second surface**] [**Sputtered on second surface**] [**Sputtered on second or fourth surface**] [**Sputtered on second or fifth surface**].

2.5 HARDWARE

A. Provide manufacturer's standard hardware, fabricated from a corrosion-resistant material compatible with door panels and other components, and complying with AAMA 907. Provide hardware designed to smoothly operate, tightly close, and securely lock multipanel folding wood-framed glass doors. Size hardware to accommodate panel weights and dimensions. Provide full-perimeter weatherstripping for each door panel.

B. Panel Support System: Provide panel support system designed for size, weight, and performance requirements of multipanel folding wood-framed glass doors indicated. Provide carriers with sealed ball bearings.

1. Overhead Supported: Provide multiwheeled overhead carriers suspended from steel or aluminum track, with lower guide system engaged in threshold for smooth operation. Limit track deflection to no more than [**0.10 inch (2.54 mm)**] <**Insert dimension**> between supports when fully loaded.
2. Adjustment: Provide panel support system capable of being adjusted for smooth operation and clearances without needing to remove panels from tracks.
3. Threshold Configuration: Extruded-aluminum [**weep sill**] [**recessed floor track sill**][**with concealed drainage system**].

a. Aluminum Finish: [**Clear**] [**Dark bronze**] anodized.
b. Wood Interior Trim: Provide wood trim on interior side of threshold, finished to match panel interior.

C. Panel Hinges: Stainless steel, multileaf hinge with plated finish[**to match exterior**]. Provide integral hangers and guides for hinges that engage panel support system.

D. Locking System:

1. Primary Entrance Panel: Provide manufacturer's standard keyed multipoint locking device, with lever handles on the interior and exterior that operate dead bolt and concealed top and bottom rods.
2. Secondary Entrance Panel: Provide [**dummy trim on interior and exterior with concealed automatic flush bolts**] [**two-point locking device that operates concealed top and bottom rods**] [**surface-mounted flush bolt**] <**Insert locking type**>.
3. Panel Pairs: Provide [**two-point locking device that operates concealed top and bottom rods**] [**surface-mounted flush bolt**] at each panel pair.
4. Trim Design: [**As selected from manufacturer's full range**] <**Insert design**>.

a. Finish: [**As indicated by manufacturer's designations**] [**Match Architect's sample**] [**As selected from manufacturer's full range of finishes**] [**Antique brass**] [**Antique nickel**] [**Beige**] [**Brass**] [**Bright brass**] [**Clay**] [**Dull brushed chrome**] [**Gold painted**] [**Matte black**] [**Oil rubbed**] [**Rustic umber**] [**Satin nickel**] [**Smoky gray**] [**Stainless steel**] [**White**].

5. Cylinders: [**Manufacturer's standard.**] [**ANSI/BHMA A156.5, Grade 1.**] [**As specified in Section 087100 "Door Hardware."**] [**As specified in Section 087111 "Door Hardware (Descriptive Specification)."**]

2.6 ACCESSORIES

A. True Divided Lites: Provide glazing with true muntins, resulting in individually glazed lites, in pattern indicated.

1. Wood Species: To match adjacent door panel.
2. Design: [**Rectangular**] [**As indicated on Drawings**] <**Insert design**>.
3. Bar Width: Not less than 1-1/8 inches (28 mm) wide.
4. Interior Bar Profile: [**Beveled**] [**Ovolo**].
5. Exterior Finish: [**Manufacturer's standard factory-applied primer**] [**Manufacturer's standard factory-applied color finish**] [**Unfinished**].

a. Exterior Paint Color: [**Abalone**] [**Alabaster**] [**Anchor gray**] [**Basil**] [**Beige**] [**Camel**] [**Castlerock**] [**Chutney**] [**Cider**] [**Cloud**] [**Coastal storm**] [**Copper canyon**] [**Emerald isle**] [**Gingersnap**] [**Green tea leaf**] [**Hartford green**] [**Lunar**] [**Maize**] [**Mediterranean**] [**Mudpie**] [**Mystic ivy**] [**Nutmeg**] [**Khaki**] [**Natural cotton**] [**Papaya**] [**Roma**] [**Rustic**] [**Sahara**] [**Sapphire**] [**Shadow**] [**Shale**] [**Slate**] [**Smokestack**] [**Spiced vinegar**] [**Steel gray**] [**Timberwolf**] [**Truffle**] [**Ultra pure white**] [**White**] <**Insert color**>.

6. Interior Finish: [**Unfinished**] [**Manufacturer's standard factory-applied primer**] [**Manufacturer's standard factory-applied color finish**] [**Manufacturer's standard clear coat**] [**Manufacturer's standard stain-and varnish-finish**].

a. Interior Stain Color: [**Cherry**] [**Chestnut**] [**Coffee bean**] [**Double clear coat**] [**Ebony**] [**Library red**] [**Light oak**] [**Red wheat**] [**Spiced walnut**] [**Sunset oak**] [**Unfinished pine**] [**Wheat**] <**Insert color**>.
b. Interior Paint Color: [**Abalone**] [**Bright white**] [**Coal black**] [**Graystone**] [**Ivory tusk**] [**Misty gray**] [**Natural cotton**] [**Silk**] [**Ultra pure white**] <**Insert color**>.

B. Grilles (False Muntins): Provide grilles in designs indicated to each panel lite.

1. Type: Exterior and interior, adhered to glass with bars between the glass.
2. Material: To match adjacent material and finish of window panel.
3. Design: [**Rectangular**] [**Diamond**] [**As indicated on Drawings**] <**Insert design**>.
4. Bar Width: Not less than [**5/8 inch (16 mm)**] [**7/8 inch (22 mm)**] [**1-1/8 inches (28 mm)**] [**1-3/8 inches (35 mm)**] [**1-3/4 inches (44.5 mm)**] [**2-1/4 inches (28 mm)**] [**4-1/2 inches (114 mm)**] wide.
5. Bar Profile: [**Beveled**] [**Ovolo**] [**Square**] [**Triangular**].
6. Exterior Aluminum Finish: Aluminum cladding with manufacturer's standard [**silicon modified polyester (SMP) coating complying with AAMA 2604**] [**fluoropolymer two-coat system with fluoropolymer color topcoat containing not less than 70 percent PVDF resin by weight and complying with AAMA 2605**] [**anodized coating**] [**mica coating complying with AAMA 2605**].

a. SMP or PVDF Color: [**Abalone**] [**Alabaster**] [**Anchor gray**] [**Basil**] [**Beige**] [**Bronze**] [**Camel**] [**Castlerock**] [**Chutney**] [**Cider**] [**Cloud**] [**Coal black**] [**Coastal storm**] [**Copper canyon**] [**Corbeau**] [**Emerald isle**] [**Gingersnap**] [**Green tea leaf**] [**Hartford green**] [**Khaki**] [**Lunar**] [**Maize**] [**Mediterranean**] [**Midnight**] [**Mystic ivy**] [**Mudpie**] [**Nutmeg**] [**Natural cotton**] [**Onyx**] [**Papaya**] [**Roma**] [**Rustic**] [**Sahara**] [**Sapphire**] [**Shadow**] [**Shale**] [**Slate**] [**Smokestack**] [**Spiced vinegar**] [**Steel gray**] [**Timberwolf**] [**Truffle**] [**Ultra pure white**] [**White**] <**Insert color**>.
b. Anodized Color: [**Black**] [**Champagne**] [**Clear**] [**Dark bronze**].
c. Mica Color: [**Cosmic gray**] [**Galaxy silver**] [**Night sky**] [**Silverstorm**].

7. Exterior Wood Finish: [**Manufacturer's standard factory-applied primer**] [**Manufacturer's standard factory-applied color finish**] [**Unfinished**].

a. Exterior Paint Color: [**Abalone**] [**Alabaster**] [**Anchor gray**] [**Basil**] [**Beige**] [**Camel**] [**Castlerock**] [**Chutney**] [**Cider**] [**Cloud**] [**Coastal storm**] [**Copper canyon**] [**Emerald isle**] [**Gingersnap**] [**Green tea leaf**] [**Hartford green**] [**Lunar**] [**Maize**] [**Mediterranean**] [**Mudpie**] [**Mystic ivy**] [**Nutmeg**] [**Khaki**] [**Natural cotton**] [**Papaya**] [**Roma**] [**Rustic**] [**Sahara**] [**Sapphire**] [**Shadow**] [**Shale**] [**Slate**] [**Smokestack**] [**Spiced vinegar**] [**Steel gray**] [**Timberwolf**] [**Truffle**] [**Ultra pure white**] [**White**] <**Insert color**>.

8. Interior Finish: [**Unfinished**] [**Manufacturer's standard factory-applied primer**] [**Manufacturer's standard factory-applied color finish**] [**Manufacturer's standard clear coat**] [**Manufacturer's standard stain-and varnish-finish**].

a. Interior Stain Color: [**Cherry**] [**Chestnut**] [**Coffee bean**] [**Double clear coat**] [**Ebony**] [**Library red**] [**Light oak**] [**Red wheat**] [**Spiced walnut**] [**Sunset oak**] [**Wheat**].
b. Interior Paint Color: [**Abalone**] [**Bright white**] [**Coal black**] [**Graystone**] [**Ivory tusk**] [**Misty gray**] [**Natural cotton**] [**Silk**] [**Ultra pure white**].

C. Casing: Extruded-aluminum [**1-5/8-inch (41-mm) brickmould**] [**1-15/16-inch (49-mm) brickmould**] [**2-inch (51-mm) flat casing**] [**2-inch (51-mm) flat casing with backband**] [**3-1/2-inch (89-mm) flat casing**] [**3-1/2-inch (89-mm) flat casing with backband**] [**3-1/2-inch (89-mm) profiled brickmould**] [**beaded casing**] [**beaded casing with backband**] [**bullnose casing**] [**historic brickmould**] [**ogee casing**] [**pavilion brickmould**] [**stucco trim casing**].

D. Casing: Exterior wood [**bullnose casing**] [**prospect casing**] [**1-15/16-inch (49-mm) flat casing**] [**1-15/16-inch (49-mm) brickmould**] [**2-inch (51-mm) beaded casing**] [**1-15/16-inch (49-mm) flat casing with backband (one piece)**] [**3-1/2-inch (89-mm) profiled brickmould**] [**3-1/2-inch (89-mm) beaded casing**] [**3-1/2-inch (89-mm) flat casing**] [**3-1/2-inch (89-mm) profiled brickmould with backband**] [**3-1/2-inch (89-mm) flat casing with backband**] [**4-inch (102-mm) flat casing**] [**5-inch (127-mm) flat casing**].

E. Fasteners: Noncorrosive and compatible with door members, trim, hardware, anchors, and other components.

1. Exposed Fasteners: Do not use exposed fasteners to greatest extent possible. For application of hardware, use fasteners that match finish hardware being fastened.

F. Anchors, Clips, and Accessories: Provide anchors, clips, and accessories of aluminum, nonmagnetic stainless steel, or zinc-coated steel or iron for multipanel folding wood-framed glass doors, complying with ASTM B456 or ASTM B633 for SC 3 severe service conditions; provide sufficient strength to withstand design pressure indicated.

1. Windborne-Debris Resistance: Provide anchors of same design used in windborne-debris resistance testing.

RF ARCHITECTURE
PH: (253) 359-4039
RICHARD@RFARCHITECTURE.COM
7421 214TH AVE E BONNEYLAKE, WA 98391

6080
REGISTERED ARCHITECT
RICHARD W. FLAKE
STATE OF WASHINGTON

All drawings, specifications, plans, ideas, arrangements, and designs represented or referred to are the property of and owned by Richard Flake Architect in whether the project for which they are made is executed or not. They were created, evolved, developed and produced for sole use on and in connection with this project and none of the above may be disclosed or given to or used by any person, firm, or corporation for any use or purpose whatsoever including any other project, except upon written permission of Richard Flake Architect.

Copyright 2023
Richard Flake Architect

MURRAY RESIDENCE
NEW SINGLE FAMILY RESIDENCE
4803 FOREST AVE SE
MERCER ISLAND, WA 98040

DESIGN: RWF
DRAWN: HAVILAND CONSULTING
CHECKED: RWF
REVISIONS:
1 PER CITY REVIEW 10-22-2021 REVISIONS
2 PER CITY REVIEW 8-8-2023 REVISIONS

September 15, 2023

1 A-12.1b

PART 2 - PRODUCTS

2.1 SOURCE LIMITATIONS

A. Obtain wood windows from single source from single manufacturer.

2.2 WINDOW PERFORMANCE REQUIREMENTS

A. Product Standard: Comply with AAMA/WDMA/CSA 101/I.S.2/A440 for definitions and minimum standards of performance, materials, components, accessories, and fabrication unless more stringent requirements are indicated.

1. Window Certification: WDMA certified with label attached to each window.

B. Performance Class and Grade: AAMA/WDMA/CSA 101/I.S.2/A440 as follows:

1. Minimum Performance Class: [**R**] [**LC**] [**CW**] [**As indicated on Drawings**] <**Insert class**>.
2. Minimum Performance Grade: [**15**] [**20**] [**25**] [**30**] [**35**] [**40**] [**45**] [**50**] [**As indicated on Drawings**] <**Insert grade**>.

C. Thermal Transmittance: NFRC 100 maximum whole-window U-factor of [**0.30 Btu/sq. ft. x h x deg F (1.71 W/sq. m x K)**] [**0.32 Btu/sq. ft. x h x deg F (1.83 W/sq. m x K)**] [**0.35 Btu/sq. ft. x h x deg F (2.0 W/sq. m x K)**] [**0.60 Btu/sq. ft. x h x deg F (3.43 W/sq. m x K)**] <**Insert value**>.

D. Solar Heat-Gain Coefficient (SHGC): NFRC 200 maximum whole-window SHGC of [**0.52**] [**0.47**] [**0.40**] [**0.30**] [**0.27**] <**Insert value**>.

E. Sound Transmission Class (STC): Rated for not less than [**26**] [**27**] [**28**] [**29**] [**30**] [**31**] [**32**] [**33**] [**34**] [**35**] [**36**] [**37**] [**38**] [**39**] [**40**] [**41**] <**Insert rating**> STC when tested for laboratory sound transmission loss in accordance with ASTM E90 and determined by ASTM E413.

F. Outside-Inside Transmission Class (OITC): Rated for not less than [**21**] [**22**] [**23**] [**24**] [**25**] [**26**] [**27**] [**28**] [**29**] [**30**] [**31**] [**32**] [**33**] [**34**] [**35**] [**36**] <**Insert rating**> OITC when tested for laboratory sound transmission loss in accordance with ASTM E90 and determined by ASTM E1332.

G. Windborne-Debris Impact Resistance: Passes ASTM E1886 missile-impact and cyclic-pressure tests in accordance with ASTM E1996 for Wind Zone [**1**] [**2**] [**3**] [**4**] for [**basic**] [**enhanced**] protection.

1. Large-Missile Test: For glazing located within [**30 ft. (9.1 m)**] <**Insert dimension**> of grade.
2. Small-Missile Test: For glazing located between 30 ft. (9.1 m) and [**60 ft. (18.3 m)**] <**Insert dimension**> above grade.

2.3 WOOD WINDOWS

A. Aluminum-Clad Wood Windows:

1. Basis-of-Design Product: Subject to compliance with requirements, provide Kolbe Windows & Doors; [**Ultra Series**] [**VistaLuxe Collection**] or comparable product by one of the following:

a. Loewen Windows.

b. Marvin Windows and Doors.
c. <**Insert manufacturer's name**>.

B. Wood Windows:

1. Basis-of-Design Product: Subject to compliance with requirements, provide Kolbe Windows & Doors; Heritage Series or comparable product by one of the following:

a. Loewen Windows.
b. Marvin Windows and Doors.
c. <**Insert manufacturer's name**>.

C. Operating Types: Provide the following operating types in locations indicated on Drawings:

1. Casement: Project out.
2. Awning: Project out.
3. Single hung.
4. Double hung.
5. Horizontal sliding.
6. Multi-panel folding.
7. Fixed.
8. <**Insert operating type**>.

D. Certified Wood: Wood products are to be certified as "FSC Pure"[**or "FSC Mixed Credit"**] in accordance with FSC STD-01-001 and FSC STD-40-004.

E. Certified Wood: Wood products are to be labeled in accordance with the AF&PA's Sustainable Forestry Initiative, be certified as "FSC Pure" in accordance with FSC STD-01-001 and FSC STD-40-004, or be certified and labeled in accordance with the standards of the Programme for Endorsement of Forest Certification.

F. Certified Wood: Wood products are to [**contain not less than 60 percent**] [**be made from**] certified wood tracked through a chain-of-custody process. Certified wood documentation is to be provided by sources certified through a forest certification system with principles, criteria, and standards developed using ISO/IEC Guide 59 or the World Trade Organization's "WTO Agreement on Technical Barriers to Trade."

G. Certified Wood: Wood products are to be certified in accordance with the American Tree Farm System's "AFF Standard," the AF&PA's Sustainable Forestry Initiative, FSC STD-01-001 and FSC STD-40-004, or the standards of the Programme for Endorsement of Forest Certification.

H. Frames and Sashes: Fine-grained wood lumber complying with AAMA/WDMA/CSA 101/I.S.2/A440; kiln-dried to a moisture content of not more than 12 percent at time of fabrication; free of visible finger joints, blue stain, knots, pitch pockets, and surface checks larger than 1/32 inch (0.8 mm) deep by 2 inches (51 mm) wide; water-repellent preservative treated.

1. Exterior Aluminum Surfaces: Aluminum cladding with manufacturer's standard [**manufacturer's standard silicon modified polyester (SMP) coating complying with AAMA 2604**] [**fluoropolymer two-coat system with fluoropolymer color topcoat**

containing not less than 70 percent PVDF resin by weight and complying with AAMA 2605] [**anodized coating**] [**mica coating complying with AAMA 2605**].

a. SMP or PVDF Color: [**Abalone**] [**Alabaster**] [**Anchor Gray**] [**Basil**] [**Beige**] [**Bronze**] [**Camel**] [**Castlerock**] [**Chutney**] [**Cider**] [**Cloud**] [**Coal black**] [**Coastal storm**] [**Copper canyon**] [**Corbeau**] [**Emerald isle**] [**Gingersnap**] [**Green tea leaf**] [**Hartford green**] [**Khaki**] [**Lunar**] [**Maize**] [**Mediterranean**] [**Midnight**] [**Mystic ivy**] [**Mudpie**] [**Nutmeg**] [**Natural cotton**] [**Onyx**] [**Papaya**] [**Roma**] [**Rustic**] [**Sahara**] [**Sapphire**] [**Shadow**] [**Shale**] [**Slate**] [**Smokestack**] [**Spiced vinegar**] [**Steel gray**] [**Timberwolf**] [**Truffle**] [**Ultra pure white**] [**White**] <**Insert color**>.
b. Anodized Color: [**Black**] [**Champagne**] [**Clear**] [**Dark bronze**].
c. Mica Color: [**Cosmic gray**] [**Galaxy silver**] [**Night sky**] [**Silverstorm**].

2. Exterior Wood Surfaces: [**Manufacturer's standard factory-applied color finish**] [**Manufacturer's standard factory-applied latex primer**] [**Manufacturer's standard factory-applied oil primer**] [**Unfinished**].

a. Paint Color: [**Abalone**] [**Alabaster**] [**Anchor gray**] [**Basil**] [**Beige**] [**Camel**] [**Castlerock**] [**Chutney**] [**Cloud**] [**Cider**] [**Coastal storm**] [**Copper canyon**] [**Emerald isle**] [**Gingersnap**] [**Green tea leaf**] [**Hartford green**] [**Khaki**] [**Lunar**] [**Maize**] [**Mediterranean**] [**Mudpie**] [**Mystic ivy**] [**Natural cotton**] [**Nutmeg**] [**Sahara**] [**Papaya**] [**Roma**] [**Rustic**] [**Sapphire**] [**Shadow**] [**Shale**] [**Slate**] [**Smokestack**] [**Spiced vinegar**] [**Steel gray**] [**Timberwolf**] [**Truffle**] [**Ultra pure white**] [**White**] <**Insert color**>.
b. Wood Species: [**Pine**] [**Alder**] [**Bamboo**] [**Cherry**] [**Knotty alder**] [**Mahogany**] [**Maple**] [**Mixed grain fir**] [**Oak**] [**Sapele**] [**Spanish cedar**] [**Vertical grain fir**] [**Walnut**] [**White oak**] <**Insert species**>.

3. Interior Wood Surfaces: [**Unfinished**] [**Manufacturer's standard factory-applied primer**] [**Manufacturer's standard factory-applied color finish**] [**Manufacturer's standard clear coat**] [**Manufacturer's standard stain-and varnish-finish**].

a. Wood Species: [**Pine**] [**Alder**] [**Bamboo**] [**Cherry**] [**Knotty alder**] [**Mahogany**] [**Maple**] [**Mixed grain fir**] [**Oak**] [**Sapele**] [**Spanish cedar**] [**Vertical grain fir**] [**Walnut**] [**White oak**] <**Insert color**>.
b. Wood Stain Color: [**Cherry**] [**Chestnut**] [**Coffee bean**] [**Double clear coat**] [**Ebony**] [**Library red**] [**Light oak**] [**Red wheat**] [**Spiced walnut**] [**Sunset oak**] [**Wheat**] <**Insert species**>.
c. Paint Color: [**Abalone**] [**Bright white**] [**Coal black**] [**Graystone**] [**Ivory tusk**] [**Misty gray**] [**Natural cotton**] [**Silk**] [**Ultra pure white**] <**Insert color**>.

4. Nailing Fin: Manufacturer's standard nailing fins for securing frame to structure during installation to hold unit plumb, square and true.
5. Installation Clips: Provide manufacturer's standard clips of sufficient strength to withstand design pressure indicated.

I. Glass: Clear annealed glass, ASTM C1036, Type 1, Class 1, q3.

1. Kind: Fully tempered [**where indicated on Drawings**] <**Insert requirements**>.

J. Windborne-Debris-Impact-Resistant Laminated Glass: ASTM C1172 with two plies of float glass.

1. Float Glass: [**Annealed**] [**Heat strengthened**] [**Fully tempered**] [**As required by performance requirements indicated**].
2. Inner Ply: Clear.
3. Interlayer: [**0.090 inch (2.29 mm)**] [**As required by performance requirements indicated**] <**Insert requirements**>.
4. Outer Ply: [**Clear**] [**Gray**] [**Bronze**] [**Green**] <**Insert tint**>.
5. Low-E Coating: [**Pyrolytic on second surface**] [**Sputtered on second surface**] [**Sputtered on second or fourth surface**] [**Sputtered on second or fifth surface**].

K. Insulating-Glass Units: ASTM E2190.

1. Glass: ASTM C1036, Type 1, Class 1, q3.

a. Tint: [**Clear**] [**Gray**] [**Bronze**] [**Green**] <**Insert tint**>.
b. Kind: Fully tempered [**where indicated on Drawings**] <**Insert requirements**>.

2. Lites: [**Two**] [**Three**].
3. Filling: Fill space between glass lites with [**air**] [**argon**].
4. Low-E Coating: [**Pyrolytic on second surface**] [**Sputtered on second surface**] [**Sputtered on second or fourth surface**] [**Sputtered on second or fifth surface**].

L. Windborne-Debris-Impact-Resistant Insulating-Glass Units: ASTM E2190 with two lites and complying with impact-resistance requirements in "Window Performance Requirements" Article.

1. Exterior Lite: ASTM C1036, Type 1, Class 1, q3.

a. Tint: [**Clear**] [**Gray**] [**Bronze**] [**Green**] <**Insert tint**>.
b. Kind: [**Heat strengthened**] [**Fully tempered**].

2. Interior Lite: ASTM C1172 clear laminated glass with two plies of float glass.

a. Float Glass: [**Annealed**] [**Heat strengthened**] [**Fully tempered**] [**As required by performance requirements indicated**].
b. Interlayer Thickness: [**0.090 inch (2.29 mm)**] [**As required by performance requirements indicated**] <**Insert requirements**>.

3. Filling: Fill space between glass lites with [**air**] [**argon**].
4. Low-E Coating: [**Pyrolytic on second surface**] [**Sputtered on second surface**] [**Sputtered on second or fourth surface**] [**Sputtered on second or fifth surface**].

M. Glazing System: [**Manufacturer's standard factory-glazing system that produces weathertight seal**] <**Insert glazing requirements**>.

1. Dual Glazing System:

a. Interior Lite: [**Glass**] <**Insert type**>.
b. Exterior Lite: [**Glass**] [**Insulating-glass unit**] <**Insert type**>.

N. Hardware, General: Provide manufacturer's standard hardware fabricated from aluminum, stainless steel, carbon steel complying with AAMA 907, or other corrosion-resistant material compatible with adjacent materials; designed to smoothly operate, tightly close, and securely lock windows, and sized to accommodate sash weight and dimensions.

1. Exposed Hardware Color and Finish: [**As indicated by manufacturer's designations**] [**Match Architect's sample**] [**As selected by Architect from manufacturer's full range**] [**Antique brass**] [**Antique nickel**] [**Beige**] [**Brass**] [**Bright brass**] [**Clay**] [**Dull brushed chrome**] [**Matte black**] [**Oil-rubbed**] [**Rustic umber**] [**Satin nickel**] [**Smoky gray**] [**Stainless steel**] [**White**].

O. Projected Window Hardware:

1. Gear-Type Rotary Operators: Complying with AAMA 901 when tested in accordance with ASTM E405, Method A. Provide operators that function without requiring the removal of interior screens or using screen wickets.

a. Type and Style: [**Match Architect's sample**] [**As selected by Architect from manufacturer's full range of types and styles**] <**Insert type and style**>.

2. Hinges: [**Manufacturer's standard type for sash weight and size indicated**] [**Stainless steel hinges with stainless steel-reinforced, sliding nylon shoes**] <**Insert description**>.
3. Multi-Point Locking System: Provide single handle to operate positive-acting arms that pull sash into locked position with locking at multiple points for casements. Provide single handle or double handle to operate positive-acting arms that pull sash into locked position with locking at multiple points for awnings.
4. Limit Devices: [**Concealed friction adjustor, adjustable stay bar**] [**Concealed support arms with adjustable, limited, hold-open**] <**Insert type**> limit devices designed to restrict sash opening.

a. Limit clear opening to [**4 inches (100 mm)**] <**Insert dimension**> for ventilation; with custodial key release.

5. Operator Stud Cover: Matching operator handle finish. Provide in locations where operator handle is removed for controlled access.
6. Pole Operators: Tubular-shaped anodized aluminum; with rubber-capped lower end and standard push-pull hook at top to match hardware design; of sufficient length to operate window without reaching more than 60 inches (1500 mm) above floor; one pole operator and pole hanger per room that has operable windows more than 72 inches (1800 mm) above floor.

P. Hung Window Hardware:

1. Counterbalancing Mechanism: Complying with AAMA 902, concealed, of size and capacity to hold sash stationary at any open position.
2. Locks and Latches: Allow unobstructed movement of the sash across adjacent sash in direction indicated and operated from the inside only.[**Provide custodial locks.**]
3. Tilt Hardware: Releasing tilt latch allows sash to pivot about horizontal axis to facilitate cleaning exterior surfaces from the interior.

Q. Horizontal-Sliding Window Hardware:

1. Sill Cap/Track: Fiberglass track with integral black color of dimensions and profile indicated; designed to comply with performance requirements indicated and to drain to the exterior.
2. Locks and Latches: Allow unobstructed movement of the sash across adjacent sash in direction indicated and operated from the inside only.[**Provide custodial locks.**]
3. Roller Assemblies: Low-friction design.

R. Weather Stripping: Provide full-perimeter weather stripping for each operable sash unless otherwise indicated.

S. Fasteners: Noncorrosive and compatible with window members, trim, hardware, anchors, and other components.

1. Exposed Fasteners: Do not use exposed fasteners to greatest extent possible. For application of hardware, use fasteners that match finish hardware being fastened.

2.4 ACCESSORIES

A. True Divided Lites: Provide glazing with true muntins, resulting in individually glazed lites, in pattern indicated.

1. Wood Species: To match adjacent finish of window sash.
2. Design: [**Rectangular**] [**As indicated on Drawings**] <**Insert design**>.
3. Bar Width: Not less than 1-1/8 inches (28 mm) wide.
4. Interior Bar Profile: [**Beveled**] [**Ovolo**].
5. Exterior Finish: [**Manufacturer's standard factory-applied primer**] [**Manufacturer's standard factory-applied color finish**] [**Unfinished**].

a. Exterior Paint Color: [**Abalone**] [**Alabaster**] [**Anchor gray**] [**Basil**] [**Beige**] [**Camel**] [**Castlerock**] [**Chutney**] [**Cider**] [**Cloud**] [**Coastal storm**] [**Copper canyon**] [**Emerald isle**] [**Gingersnap**] [**Green tea leaf**] [**Hartford green**] [**Lunar**] [**Maize**] [**Mediterranean**] [**Mudpie**] [**Mystic ivy**] [**Nutmeg**] [**Khaki**] [**Natural cotton**] [**Papaya**] [**Roma**] [**Rustic**] [**Sahara**] [**Sapphire**] [**Shadow**] [**Shale**] [**Slate**] [**Smokestack**] [**Spiced vinegar**] [**Steel gray**] [**Timberwolf**] [**Truffle**] [**Ultra pure white**] [**White**] <**Insert color**>.

6. Interior Finish: [**Unfinished**] [**Manufacturer's standard factory-applied primer**] [**Manufacturer's standard factory-applied color finish**] [**Manufacturer's standard clear coat**] [**Manufacturer's standard stain-and varnish-finish**].

a. Interior Stain Color: [**Cherry**] [**Chestnut**] [**Coffee bean**] [**Double clear coat**] [**Ebony**] [**Library red**] [**Light oak**] [**Red wheat**] [**Spiced walnut**] [**Sunset oak**] [**Unfinished pine**] [**Wheat**].
b. Interior Paint Color: [**Abalone**] [**Bright white**] [**Coal black**] [**Graystone**] [**Ivory tusk**] [**Misty gray**] [**Natural cotton**] [**Silk**] [**Ultra pure white**].

B. Grilles (False Muntins): Provide grilles in designs indicated to each sash lite.

1. Type: Exterior and interior, adhered to glass [**with**] [**without**] bars between the glass.
2. Material: To match adjacent finish of window sash.

3. Design: [**Rectangular**] [**Diamond**] [**As indicated on Drawings**] <**Insert design**>.
4. Bar Width: Not less than [**5/8 inch (16 mm)**] [**7/8 inch (22 mm)**] [**1-1/8 inches (28 mm)**] [**1-3/8 inches (35 mm)**] [**1-3/4 inches (44.5 mm)**] [**2-1/4 inches (28 mm)**] [**4-1/2 inches (114 mm)**] wide.
5. Interior Bar Profile: [**Beveled**] [**Ovolo**] [**Square**] [**Triangular**].
6. Exterior Aluminum Finish: Aluminum cladding with manufacturer's standard [**silicon modified polyester (SMP) coating complying with AAMA 2604**] [**fluoropolymer two-coat system with fluoropolymer color topcoat containing not less than 70 percent PVDF resin by weight and complying with AAMA 2605**] [**anodized coating**] [**mica coating complying with AAMA 2605**].

a. SMP or PVDF Color: [**Abalone**] [**Alabaster**] [**Anchor gray**] [**Basil**] [**Beige**] [**Bronze**] [**Camel**] [**Castlerock**] [**Chutney**] [**Cider**] [**Cloud**] [**Coal black**] [**Coastal storm**] [**Copper canyon**] [**Corbeau**] [**Emerald isle**] [**Gingersnap**] [**Green tea leaf**] [**Hartford green**] [**Khaki**] [**Lunar**] [**Maize**] [**Mediterranean**] [**Midnight**] [**Mystic ivy**] [**Mudpie**] [**Nutmeg**] [**Natural cotton**] [**Onyx**] [**Papaya**] [**Roma**] [**Rustic**] [**Sahara**] [**Sapphire**] [**Shadow**] [**Shale**] [**Slate**] [**Smokestack**] [**Spiced vinegar**] [**Steel gray**] [**Timberwolf**] [**Truffle**] [**Ultra pure white**] [**White**] <**Insert color**>.
b. Anodized Color: [**Black**] [**Champagne**] [**Clear**] [**Dark Bronze**].
c. Mica Color: [**Cosmic gray**] [**Galaxy silver**] [**Night sky**] [**Silverstorm**].

7. Exterior Wood Finish: [**Manufacturer's standard factory-applied primer**] [**Manufacturer's standard factory-applied color finish**] [**Unfinished**].

a. Exterior Paint Color: [**Abalone**] [**Alabaster**] [**Anchor gray**] [**Basil**] [**Beige**] [**Camel**] [**Castlerock**] [**Chutney**] [**Cider**] [**Cloud**] [**Coastal storm**] [**Copper canyon**] [**Emerald isle**] [**Gingersnap**] [**Green tea leaf**] [**Hartford green**] [**Khaki**] [**Lunar**] [**Maize**] [**Mediterranean**] [**Mudpie**] [**Mystic ivy**] [**Natural cotton**] [**Nutmeg**] [**Papaya**] [**Roma**] [**Rustic**] [**Sahara**] [**Sapphire**] [**Shadow**] [**Shale**] [**Slate**] [**Smokestack**] [**Spiced vinegar**] [**Steel gray**] [**Timberwolf**] [**Truffle**] [**Ultra pure white**] [**White**] <**Insert color**>.

8. Interior Wood Finish: [**Unfinished**] [**Manufacturer's standard factory-applied primer**] [**Manufacturer's standard factory-applied color finish**] [**Manufacturer's standard clear coat**] [**Manufacturer's standard stain-and varnish-finish**].

a. Interior Stain Color: [**Cherry**] [**Chestnut**] [**Coffee bean**] [**Double clear coat**] [**Ebony**] [**Library red**] [**Light oak**] [**Red wheat**] [**Spiced walnut**] [**Sunset oak**] [**Wheat**] <**Insert color**>.
b. Interior Paint Color: [**Abalone**] [**Bright white**] [**Coal black**] [**Graystone**] [**Ivory tusk**] [**Misty gray**] [**Natural cotton**] [**Silk**] [**Ultra pure white**] <**Insert color**>.

C. Casing: Extruded aluminum [**1-5/8-inch (41-mm) brickmould**] [**1-15/16-inch (49-mm) brickmould**] [**2-inch (51-mm) flat casing**] [**2-inch (51-mm) flat casing with backband**] [**3-1/2-inch (89-mm) flat casing**] [**3-1/2-inch (89-mm) flat casing with backband**] [**3-1/2-inch (89-mm) profiled brickmould**] [**beaded casing**] [**beaded casing with backband**] [**bull nose casing**] [**historic brickmould**] [**ogee casing**] [**pavilion brickmould**] [**stucco trim casing**].

D. Casing: Exterior wood [**bull nose casing**] [**prospect casing**] [**1-15/16-inch (49-mm) flat casing**] [**1-15/16-inch (49-mm) brickmould**] [**2-inch (51-mm) beaded casing**] [**1-15/16-inch (49-mm) flat casing with backband (1-piece)**] [**3-1/2-inch (89-mm) profiled brickmould**] [**3-1/2-inch (89-mm) beaded casing**] [**3-1/2-inch (89-mm) flat casing**] [**3-1/2-inch (89-mm) profiled brickmould with backband**] [**3-1/2-inch (89-mm) flat casing with backband**] [**4-inch (102-mm) flat casing**] [**5-inch (127-mm) flat casing**].

RF ARCHITECTURE
PH: (253) 359-4039
RICHARD@RFARCHITECTURE.COM
7421 214TH AVE E BONNEYLAKE, WA 98391

6080 REGISTERED ARCHITECT
RICHARD W. FLAKE
STATE OF WASHINGTON

All drawings, specifications, plans, ideas, arrangements, and designs represented or referred to are the property of and owned by Richard Flake Architect in whether the project for which they are made is executed or not. They were created, evolved, developed and produced for sole use on and in connection with this project and none of the above may be disclosed or given to or used by any person, firm, or corporation for any use or purpose whatsoever including any other project, except upon written permission of Richard Flake Architect.

Copyright 2023
Richard Flake Architect

MURRAY RESIDENCE
NEW SINGLE FAMILY RESIDENCE
4803 FOREST AVE SE
MERCER ISLAND, WA 98040

DESIGN: RWF
DRAWN: HAVILAND CONSULTING
CHECKED: RWF
REVISIONS:
1 PER CITY REVIEW 10-22-2021 REVISIONS
2 PER CITY REVIEW 8-8-2023 REVISIONS

September 15, 2023

1 A-12.1c

TOWN & COUNTRY
LUXURY FIREPLACES

FOR ARCHITECTS & DESIGNERS

TC42

SERIES D2

Dimensions | Clearances | Venting

IMPORTANT
This booklet is intended as a basic specification guide for architects, designers and builders. Please refer to the Instruction Manual supplied with the fireplace for detailed information regarding installation and operation.

Product installation manuals can also be viewed at: www.townandcountryfireplaces.com

Fireplace Dimensions

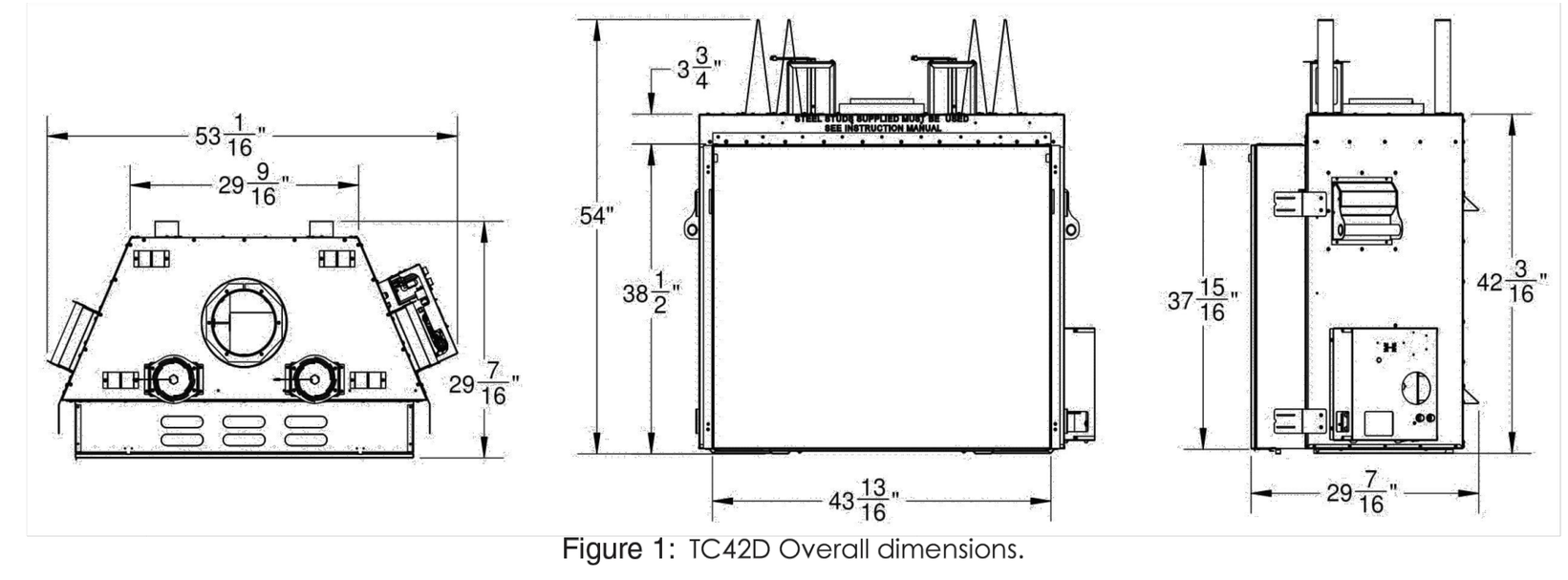

Figure 1: TC42D Overall dimensions.

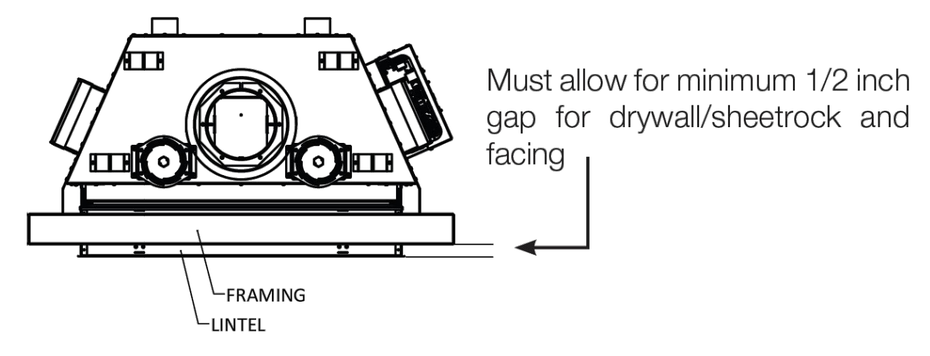

Must allow for minimum 1/2 inch gap for drywall/sheetrock and facing

TC42D2 Cad Drawing
Available at
www.townandcountryfireplaces.com

Examples of Common Locations

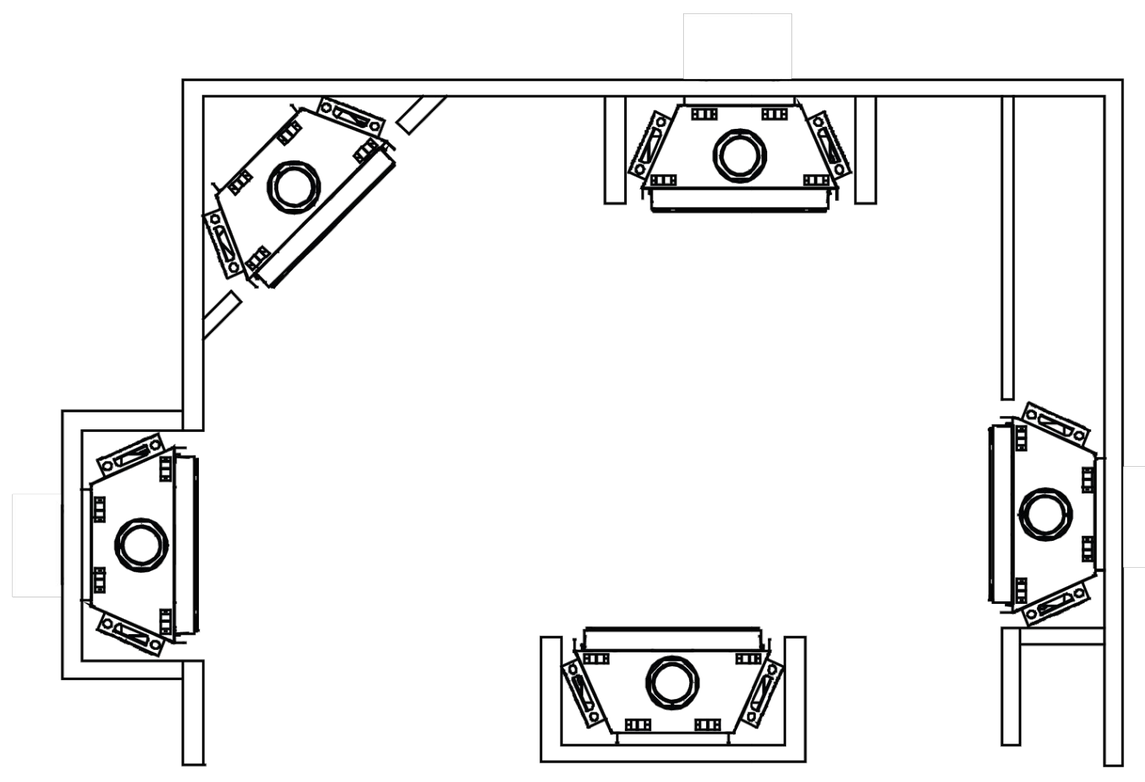

Mantel Clearance Chart

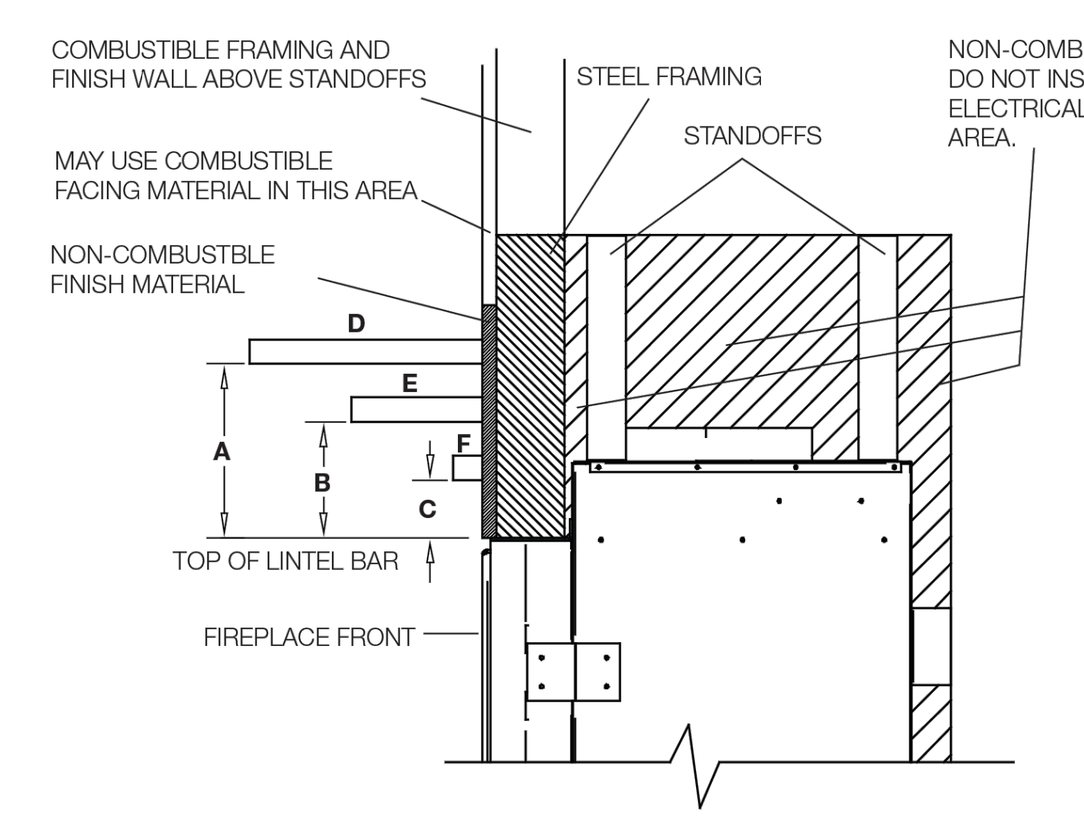

MANTEL CLEARANCE CHART	
* MANTEL CLEARANCE	
A	9"
B	6"
C	3"
** MANTEL DEPTH	
D	12"
E	6 3/4"
F	1 1/2"

Minimum Clearances to Combustibles

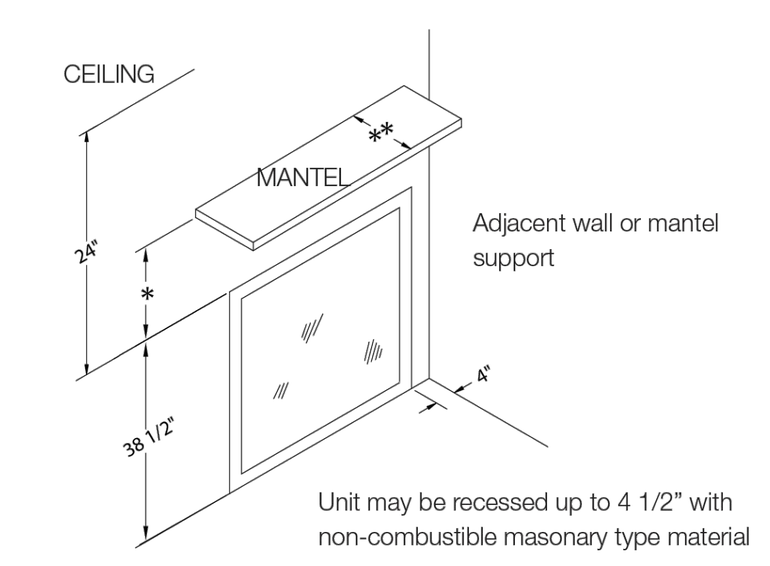

Minimum Clearances:

Side standoffs .... 0 in. (0 mm)
Back standoffs .... 0 in. (0 mm)
Top standoffs .... 0 in. (0 mm)
Bottom of appliance .... 0 in. (0 mm)
Adjacent side wall .... 4 in. (102 mm)
Ceiling to appliance .... 24 in. (610 mm)
*Mantel to appliance .... See Figure #4
**Maximum Mantel extension .... See Figure #4
Mantel support .... 4 in. (102 mm)
Vertical vent pipe .... 1 3/4" in. (45 mm)
Horizontal Vent pipe (Top, sides and bottom) 1 3/4" in. (45 mm)

Steel Stud Framing Kit Dimensions Kit

Framing kit is supplied with unit with Fireplace

All other framing can be done with conventional lumber

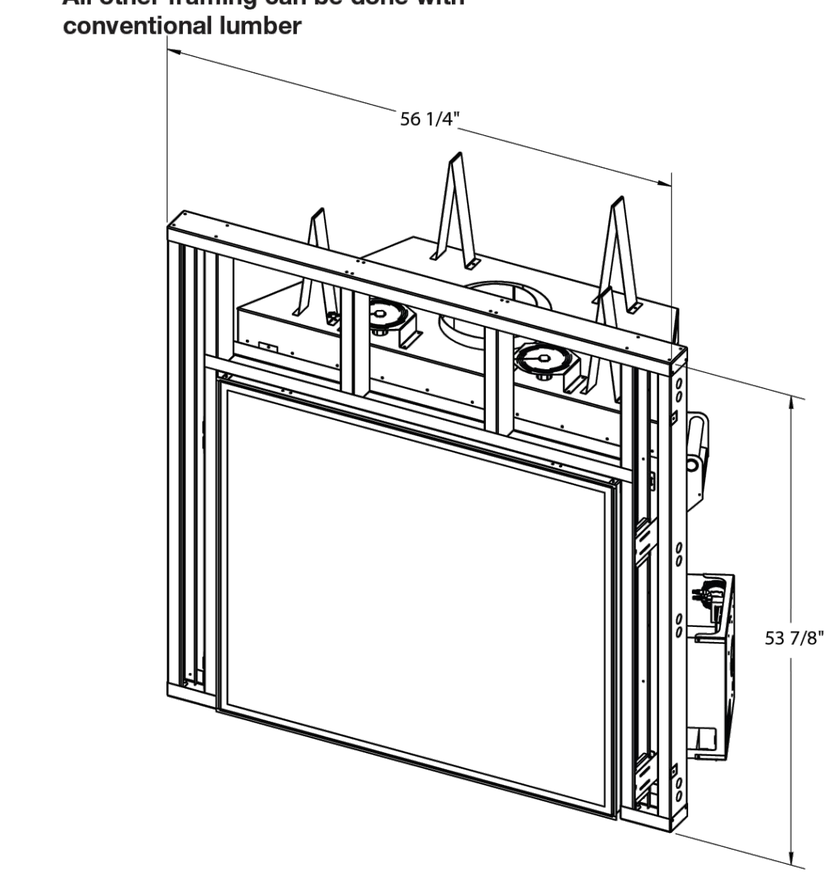

Non-combustible Board Detail

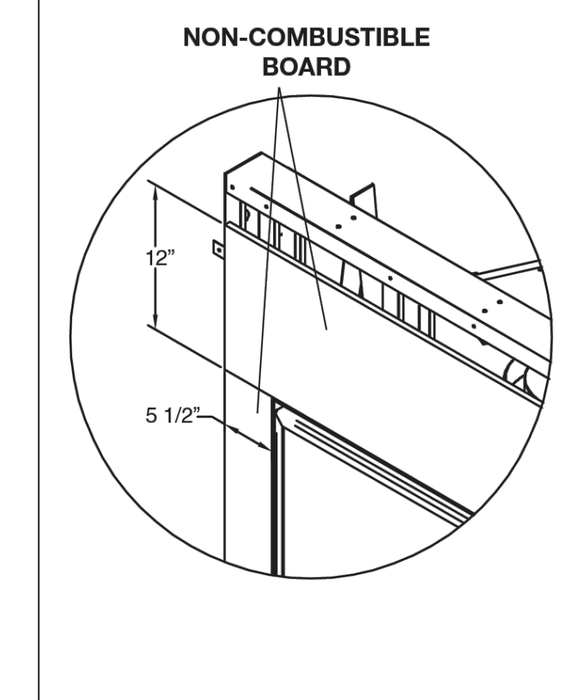

NON-COMBUSTIBLE materials must extend 12" above and 5 1/2" to the sides of the framing edges.

NON-COMBUSTIBLE BOARD NOT INCLUDED.

Minimum Combustible Framing Dimensions

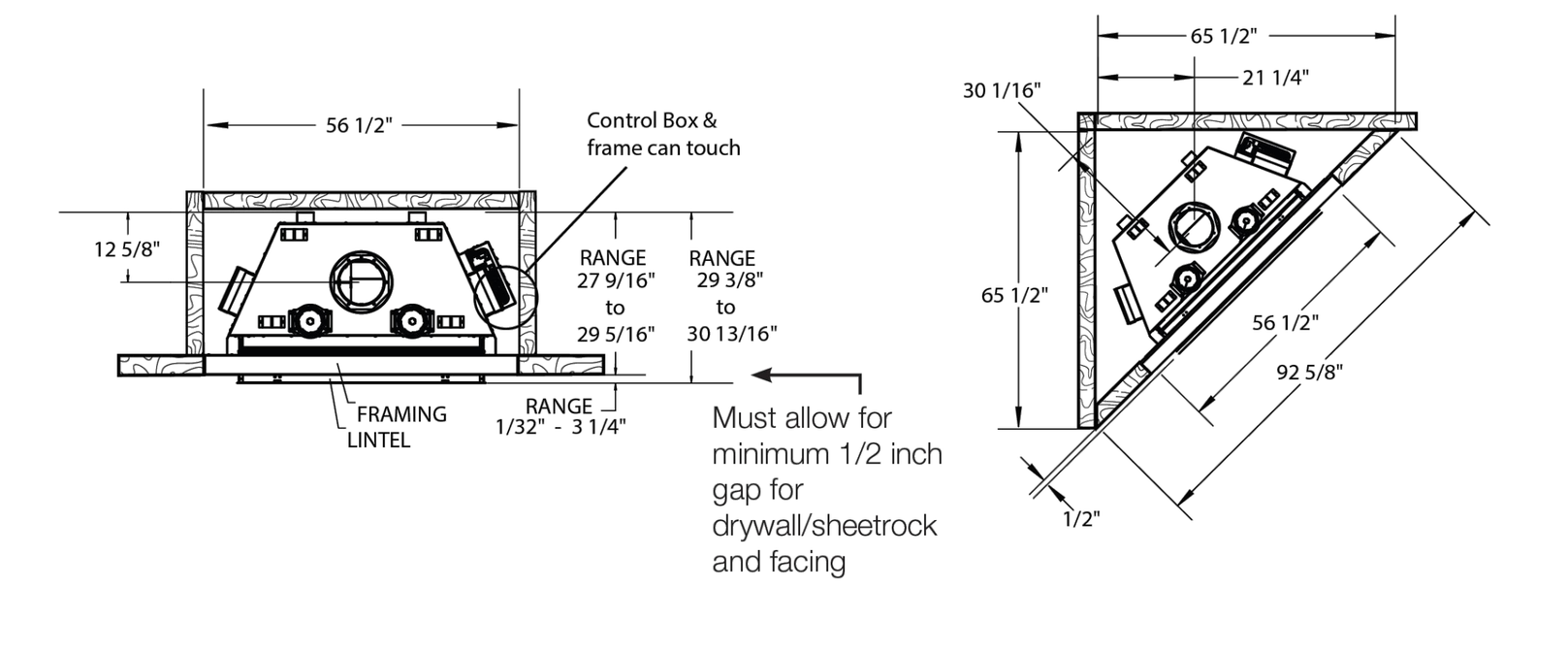

Must allow for minimum 1/2 inch gap for drywall/sheetrock and facing

NOTE: Fireplace should be in its final location before framing.

Proflame 2 Control System

Town and Country D Series fireplaces use the SIT Proflame 2 control system.

This includes an elegant hand-held, programmable, multi-function remote control transmitter with an easy to read LCD display.

The fireplace also comes with a Town & Countrys' proprietary wall-mounted control panel which allows for simple ON/OFF operation, or can be linked with the hand-held remote control unit. This panel also accepts four double A batteries to provide for a back-up system during power outages. The wall-mounted panel also works on most customer supplied Home Automation Systems which allow for full control of fireplace flame and light modulation.

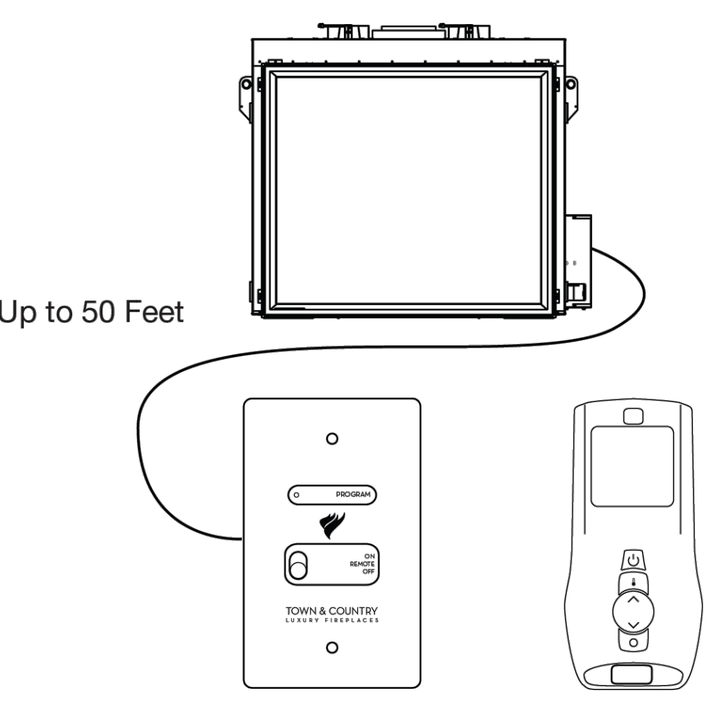

Hearth Extension

Caution: While a hearth extension is not required and combustible flooring materials may be brought directly up to the fireplace, many materials (such as wood flooring) may not tolerate the radiant heat from this fireplace, resulting in discoloration, shrinking and cracking. For this reason, we suggest a non-combustible hearth that is no more than 1" above the bottom of the fireplace. If material is thicker, fireplace must be raised accordingly.

Caution: Hearth extensions thicker than 1" will interfere with the window frame when opening.

Surface of hearth extension may not be higher than the floor of the lintel and may not be more than 1 inch above the bottom of the fireplace.

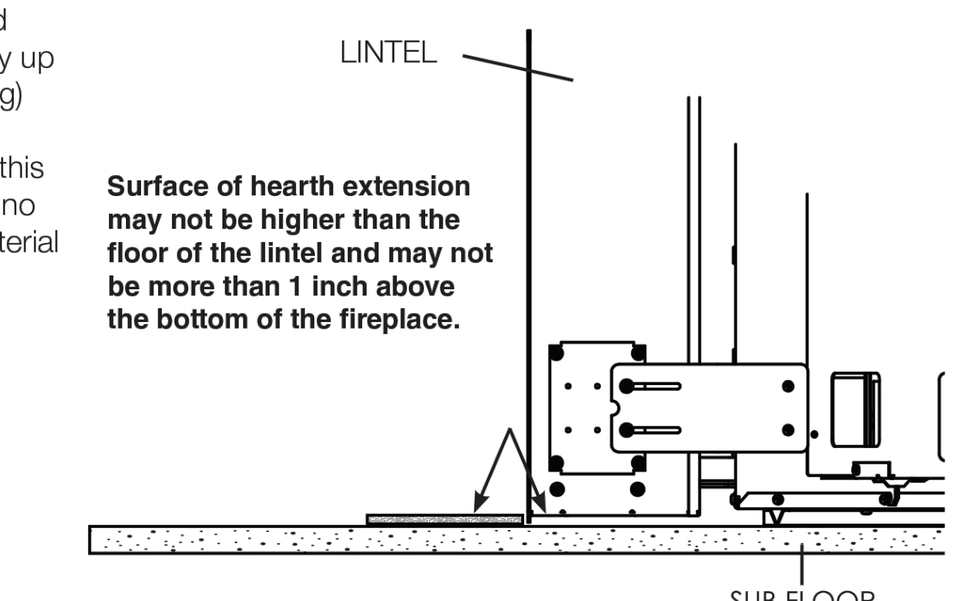

Side Facing Clearances

Caution: This fireplace may be recessed up to a maximum depth of 4 1/2". This recess must be constructed from non-combustible material. The space between the outside framing edge and the firebox must be completely free of any obstructions or debris, and the window, with trim fitted, must be able to move freely.

No building material is permitted to protrude past the framing edges attached to the fireplace under ANY circumstance.

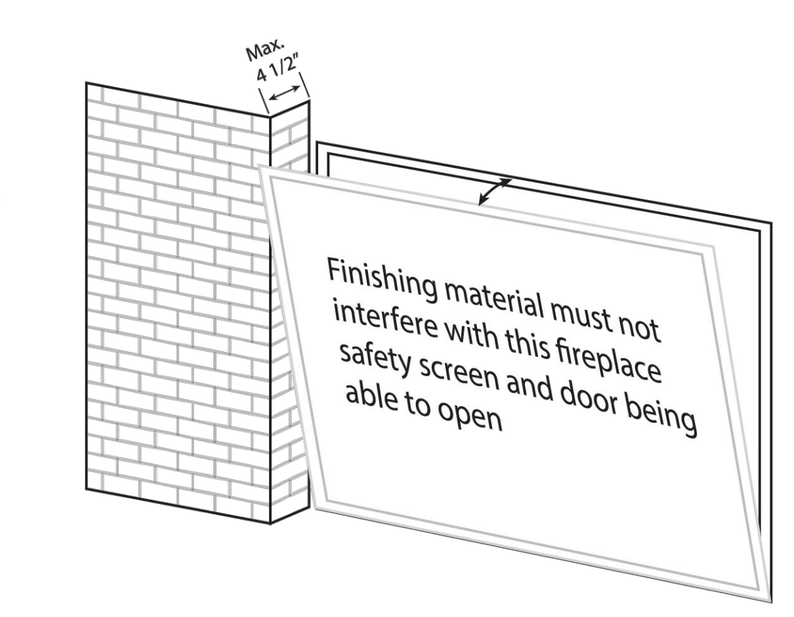

Direct Vent Wall Installation

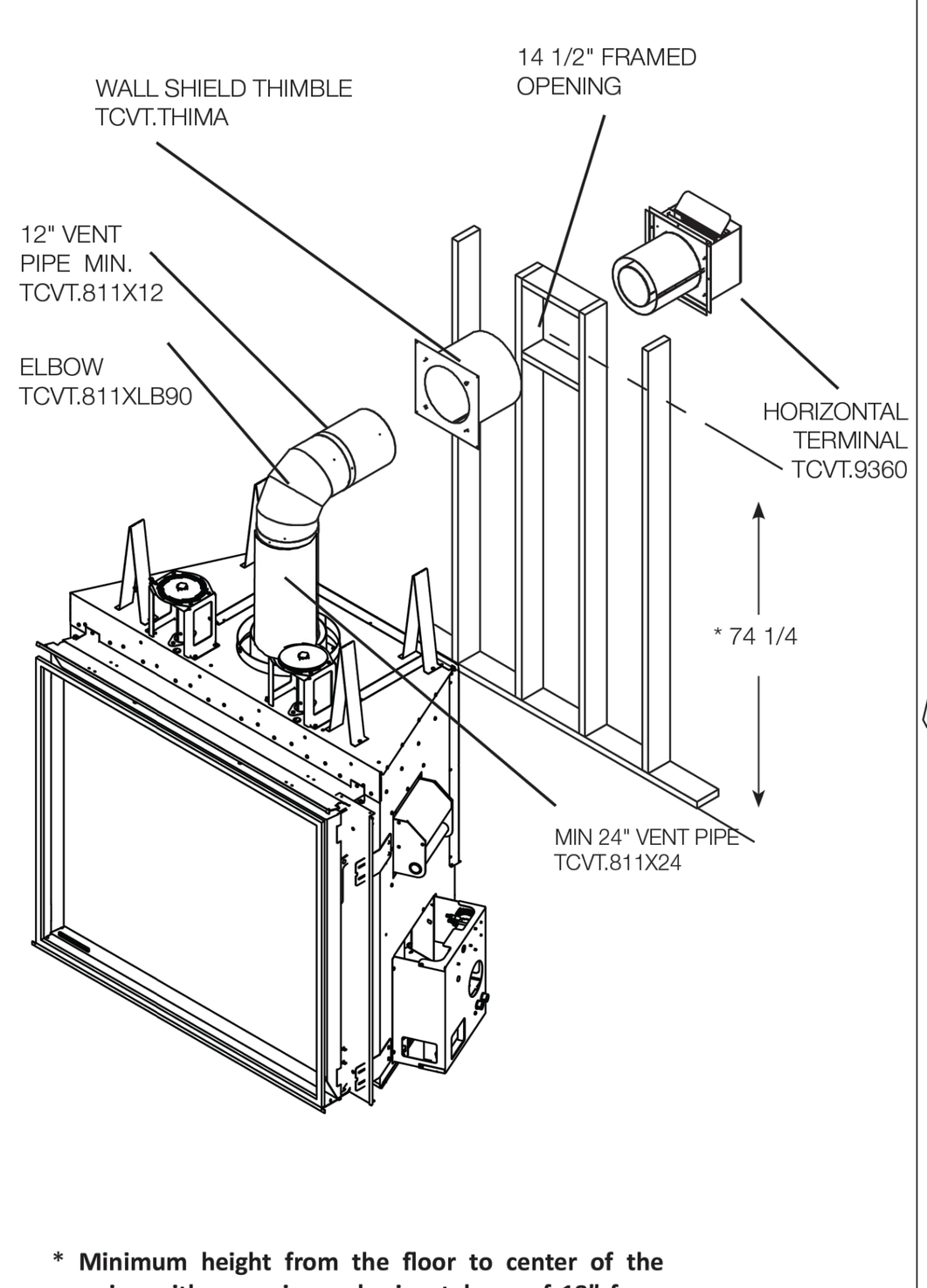

*** Minimum height from the floor to center of the opening with a maximum horizontal run of 18" from the center of the flue outlet to the outside face of the outer wall. The height will need to be increased if a longer horizontal pipe is required.**

Direct Vent Roof Installation

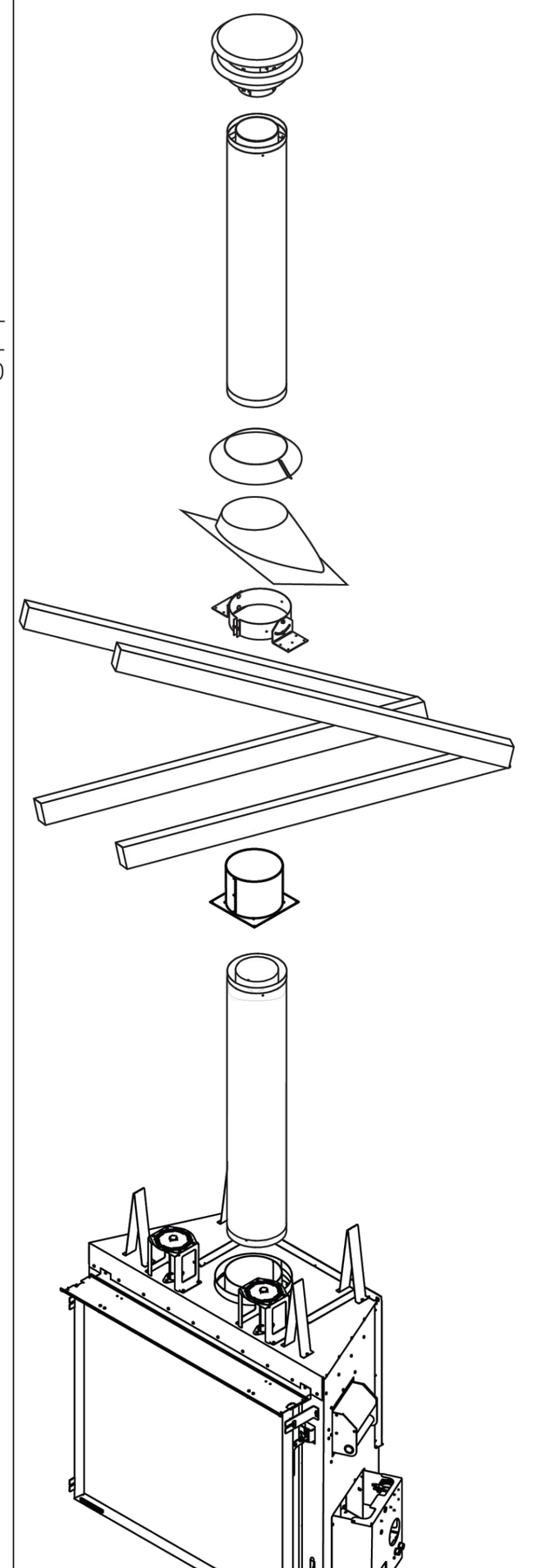

Wall Termination Venting Chart

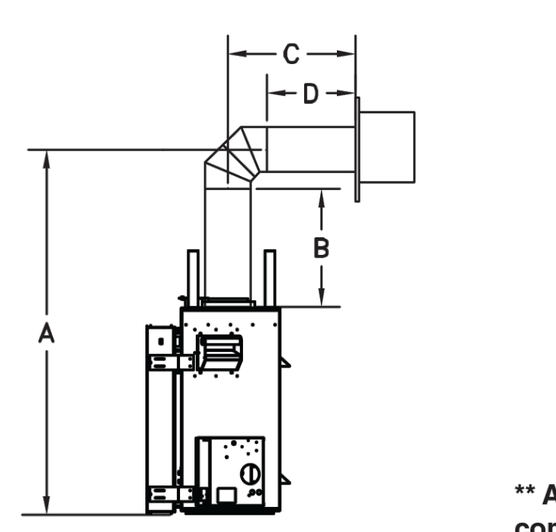

A Minimum rise	B Pipe length	C Maximum run	D Pipe length Max.
74 1/4"	1-24"	18"	1-12"
78 1/2"	1-12" 1-18"	75 3/4"	1-48" 1-12"
84 1/2"	1-24" 1-12"	11' 2"	2-48" 1-24"
90 1/2"	1-24" 1-18"	15' 10 1/2"	3-48" 1-24" 1-12"
98 1/4"	1-48"	20' 10 1/2"	5-48"

For other rise/run combinations see chart below

**** All dimensions are approximate. Both rise and run may vary with different combinations of pipe.**

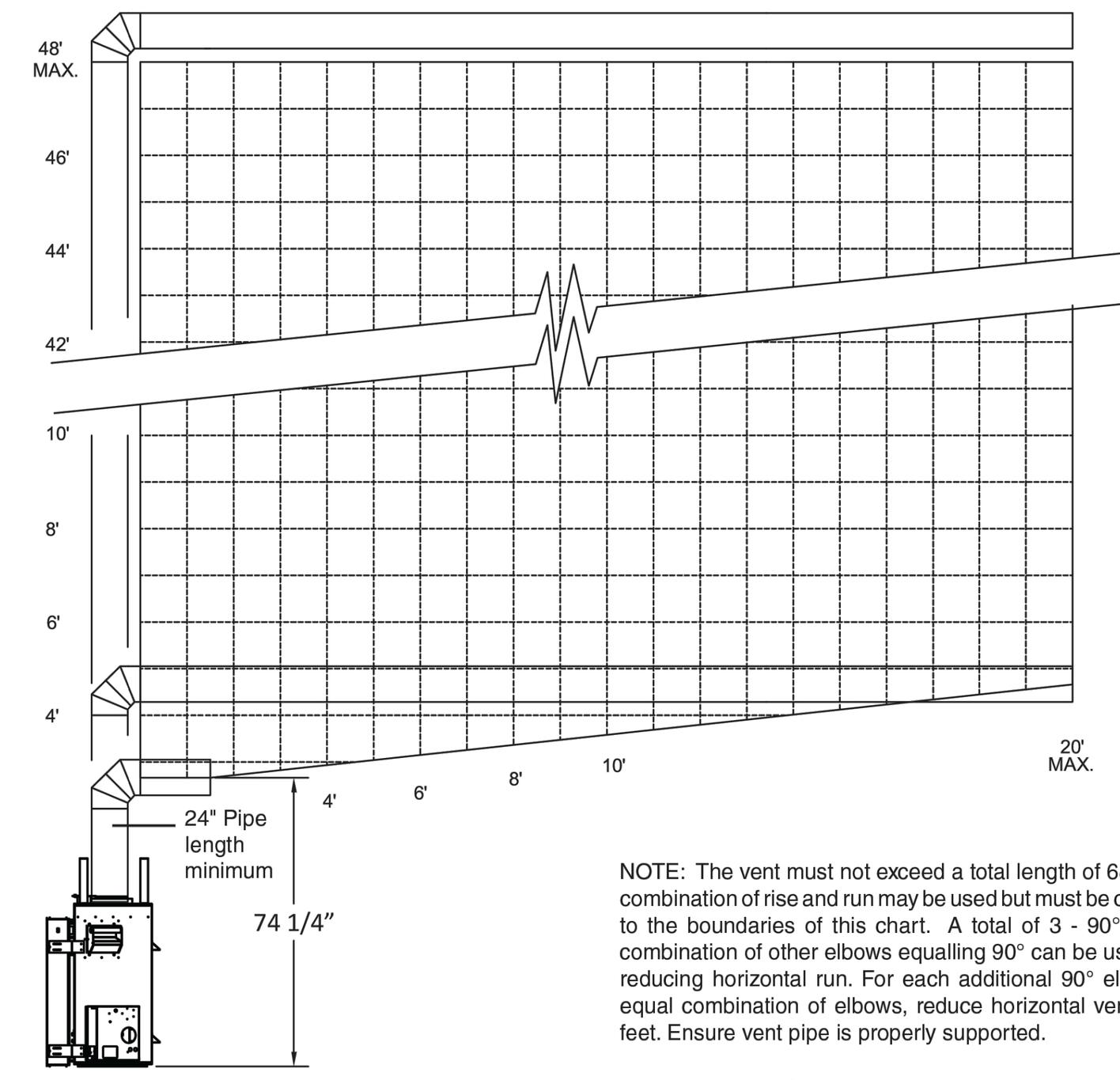

NOTE: The vent must not exceed a total length of 68 feet. Any combination of rise and run may be used but must be constrained to the boundaries of this chart. A total of 3 - 90° elbows or combination of other elbows equalling 90° can be used without reducing horizontal run. For each additional 90° elbow, or an equal combination of elbows, reduce horizontal vent run by 2 feet. Ensure vent pipe is properly supported.

TC42D2 Cad Drawing
Available at
www.townandcountryfireplaces.com

Roof Termination Venting Chart

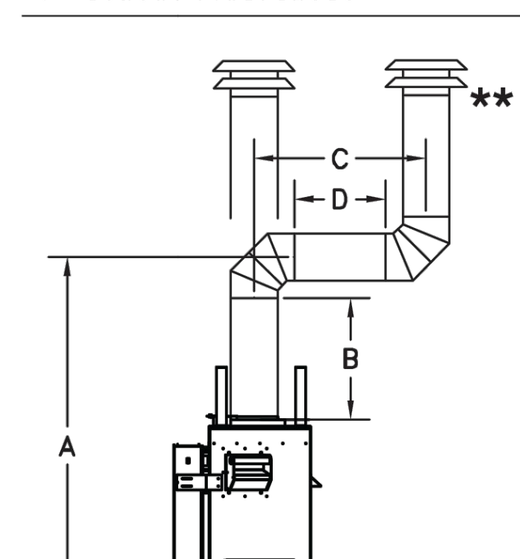

A Minimum rise	B Pipe length	C Maximum run	D Pipe length Maximum
74 1/4"	1-24"	29"	1-12"
78 1/2"	1-12" 1-18"	77 1/4"	1-48" 1-12"
84 1/2"	1-24" 1-12"	11' 1 1/2"	2-48" 1-24"
90 1/2"	1-24" 1-18"	15' 10"	3-48" 1-24" 1-12"
98 1/4"	1-48"	20' 10"	5-48"

For other rise/run combinations see chart below

**** All dimensions are approximate. Both rise and run may vary with different combinations of pipe.**

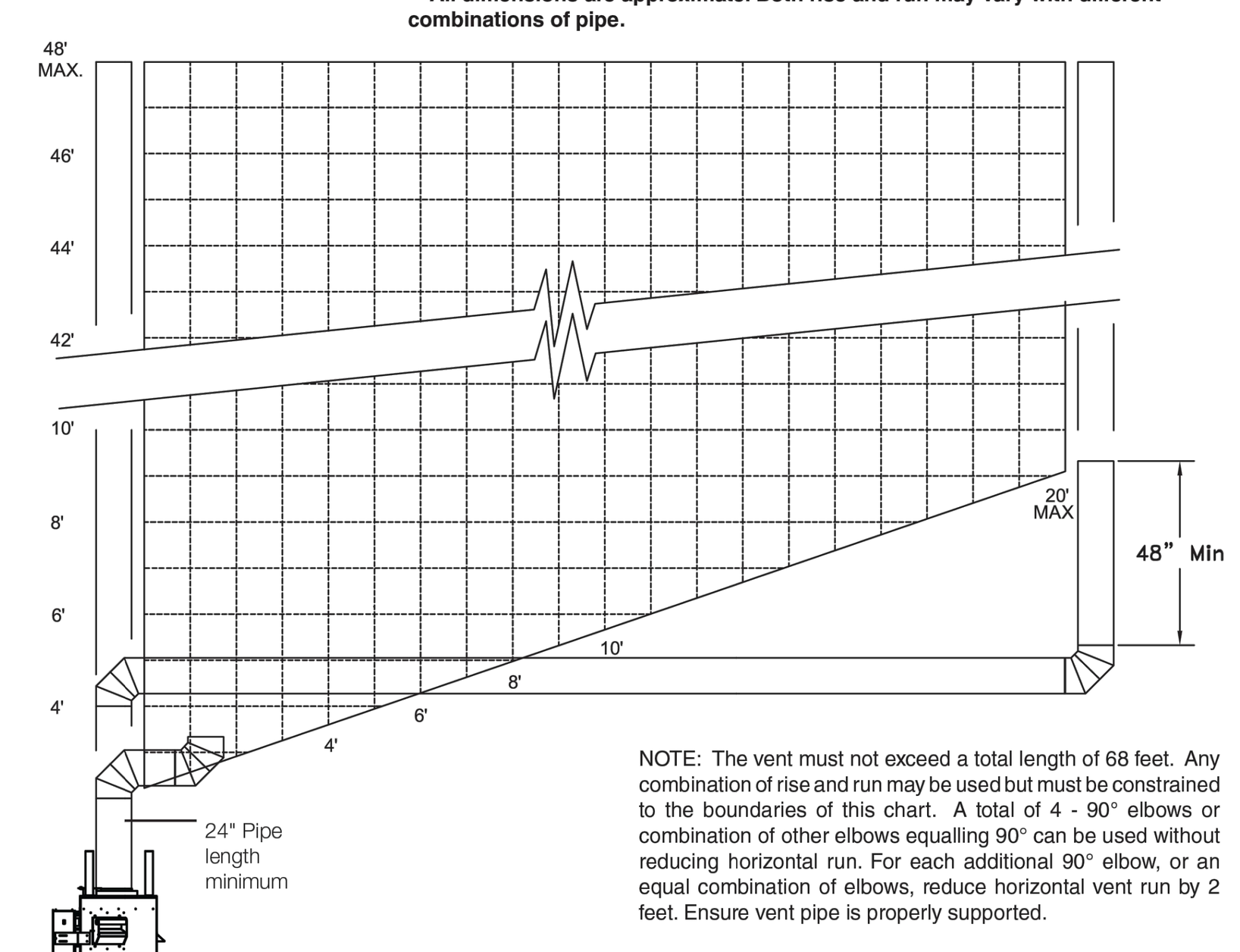

NOTE: The vent must not exceed a total length of 68 feet. Any combination of rise and run may be used but must be constrained to the boundaries of this chart. A total of 4 - 90° elbows or combination of other elbows equalling 90° can be used without reducing horizontal run. For each additional 90° elbow, or an equal combination of elbows, reduce horizontal vent run by 2 feet. Ensure vent pipe is properly supported.

TC42D2 Cad Drawing
Available at
www.townandcountryfireplaces.com

Vent Terminal Clearance

Minimum clearances to the vent terminal must be maintained as shown (See illustration to right & below). Measure clearances to the nearest edge of termination hood. (See pitch table below).
NOTE: Vent terminal must not be recessed

NOTE: LOCAL CODES OR REGULATIONS MAY REQUIRE DIFFERENT CLEARANCES.

Terminal to sloped Roof Pitch Table
(minimum)

	ft	m
Flat to 6/12	1.00	0.30
Over 6/12 to 7/12	1.25	0.38
Over 7/12 to 8/12	1.50	0.46
Over 8/12 to 9/12	2.00	0.61
Over 9/12 to 10/12	2.50	0.76
Over 10/12 to 11/12	3.25	0.99
Over 11/12 to 12/12	4.00	1.22

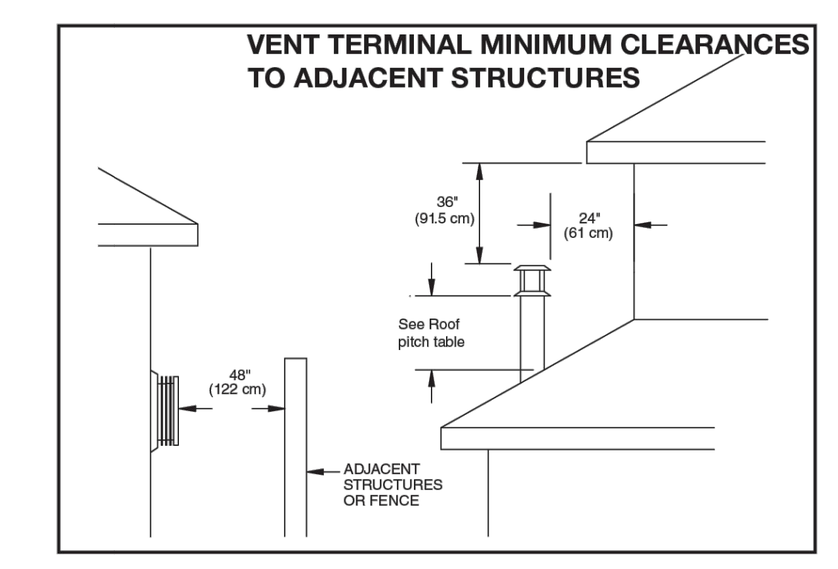

Figure 2: Vent roof clearance.

Vent Terminal Minimum Clearances

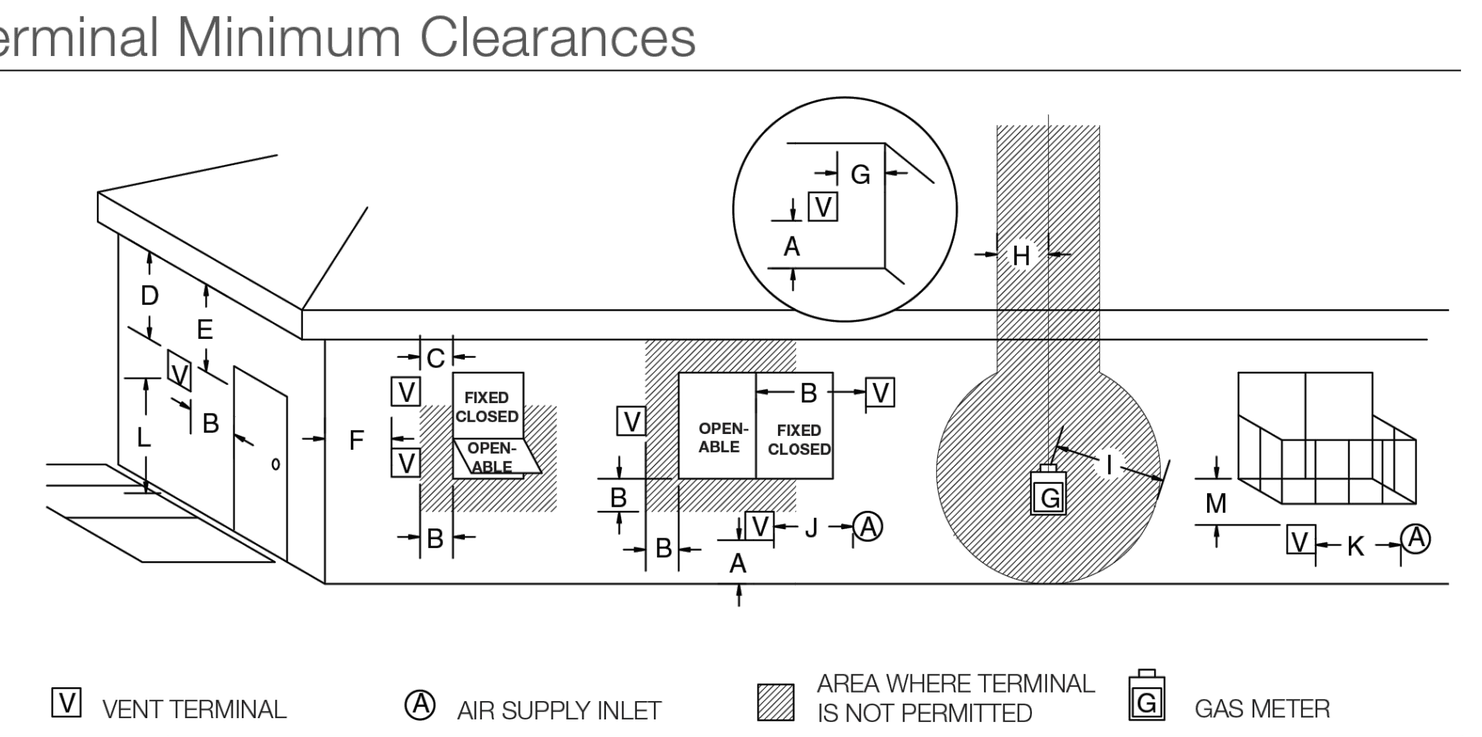

A=	*12 inches (30 cm) min.	Clearances above grade, veranda, porch, deck, or balcony
B=	*12 inches (30 cm) min.	Clearance to window or door that may be opened
C=	12 inches (30 cm) min.	Clearance to permanently closed window recommended to prevent condensation on window
D=	30 inches (76 cm) min.	Vertical clearance to ventilated soffit located above the terminal within a horizontal distance of 2 feet (60 cm) from the edge of the terminal
E=	30 inches (76 cm) min.	Clearance to unventilated soffit
F=	6 inches (15 cm) min.	Clearance to outside corner
G=	6 inches (15 cm) min.	Clearance to inside corner
H=	3 feet (90 cm) min. regulator	*Not to be installed above a meter/regulator assembly within 3 feet (90 cm) horizontally from the center-line of the
I=	*6 feet (1.8 m) min.	Clearance to service regulator vent outlet
J=	*12 inches (30 cm) min.	Clearance to non mechanical air supply inlet to building or the combustion air inlet to any other appliance
K=	*6 feet (1.8 m) min.	Clearance to a mechanical air supply inlet
L=	*7 feet (2.1 m) min.	^ Clearance above paved side-walk or a paved driveway located on public property
M=	**30 inches (76 cm) min	Clearance under veranda, porch, deck, or balcony

^ a vent shall not terminate directly above a side-walk or paved driveway which is located between two single family dwellings and serves both dwellings*
** only permitted if veranda, porch, deck, or balcony is fully open on a minimum of 2 sides beneath the floor*
* as specified in CAN/CSA B149.1 Installation Codes, Note: local Codes or Regulation may require different clearances
* for U.S.A. Installations follow the current National Fuel Gas Code, NFPA54/ANSI Z223.1

Optional Power Vent

Reach almost any room or commercial setting. Optional Power Venting allows runs up to 110' from an outside wall or roof surface. Vent horizontally or vertically with up to six 90-degree elbows, including runs up to 3' below the fireplace.

The premium Power Vent fan runs quietly outside, at the exterior terminal.

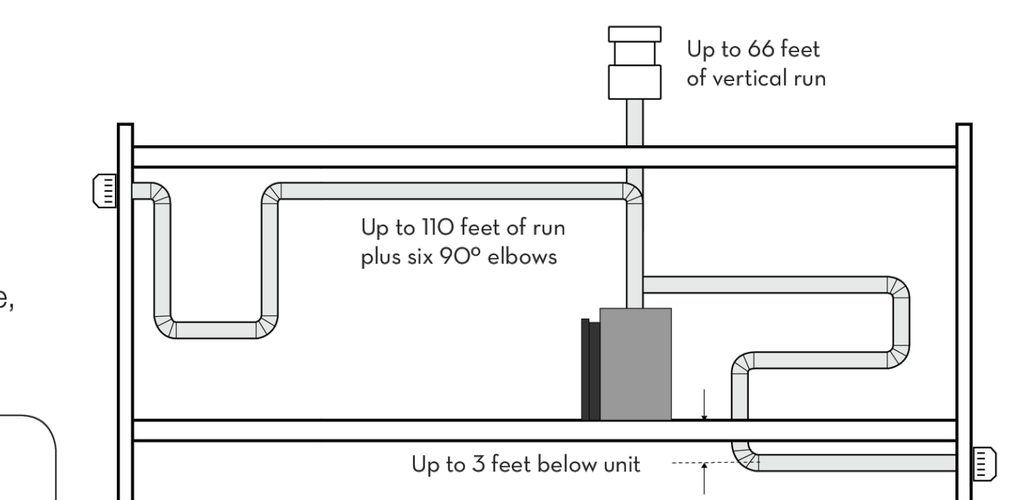

TC42D2 Cad Drawing
Available at
www.townandcountryfireplaces.com

Power Vent Terminals



Roof Termination

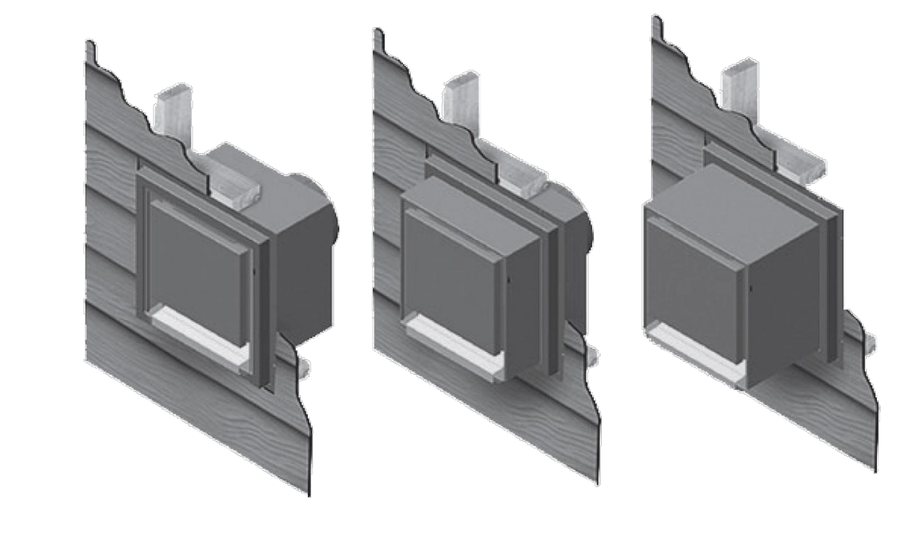

Flush Mount termination

Direct Vent Terminals



Standard Venting Roof Termination



Standard Venting Wall Termination



Stainless Steel Standard Venting Termination for Condo Installation

MASON-LITE

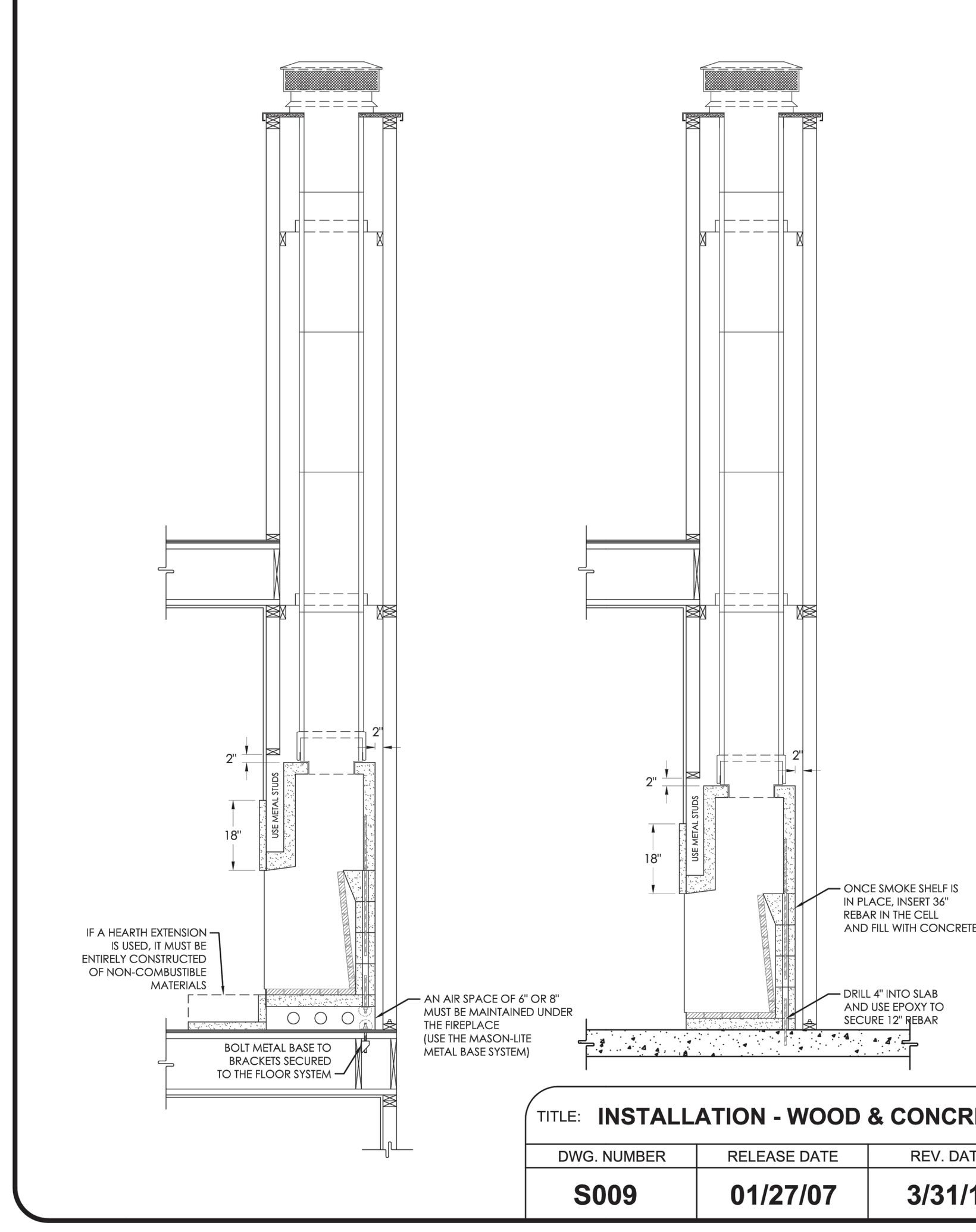

TITLE: **INSTALLATION - WOOD & CONCRETE**

DWG. NUMBER	RELEASE DATE	REV. DATE
S009	01/27/07	3/31/10

RF ARCHITECTURE
PH: (253) 359-4039
RICHARD@RFARCHITECTURE.COM
7421 214TH AVE E BONNEYLAKE, WA 98391

6080 REGISTERED ARCHITECT RICHARD W. FLAKE STATE OF WASHINGTON

All drawings, specifications, plans, ideas, arrangements, and designs represented or referred to are the property of and owned by Richard Flake Architect in whether the project for which they are made is executed or not. They were created, evolved, developed and produced for sole use on and in connection with this project and none of the above may be disclosed or given to or used by any person, firm, or corporation for any use or purpose whatsoever including any other project, except upon written permission of Richard Flake Architect.

Copyright 2023
Richard Flake Architect

MURRAY RESIDENCE
NEW SINGLE FAMILY RESIDENCE
4803 FOREST AVE SE
MERCER ISLAND, WA 98040

DESIGN: RWF
DRAWN:
HAVILAND CONSULTING
CHECKED: RWF
REVISIONS:
1 PER CITY REVIEW 10-22-2021 REVISIONS
2 PER CITY REVIEW 8-8-2023 REVISIONS

September 15, 2023

1 A-12.2

Performance Information

Line	Unit	Label	Product Type	U-Value	SHGC	VT	CR	HVPC CPD#	PG	DP+
001-1		game rm/studio (1,2)							
	1.1		Ultra Series Casement Rectangle	0.29	0.22	0.40	46	KWM-K-32-01066-00001		50.13
002-1		studio (3)							
	1.1		Ultra Series Casement Rectangle	0.29	0.22	0.40	46	KWM-K-32-01066-00001		50.13
	1.2		Ultra Series Casement Rectangle	0.29	0.22	0.40	46	KWM-K-32-01066-00001		50.13
003-1		studio (01)							
	1.1		Ultra Series TripleStileAndRailDoor MultiBiFoldDoor Rectangle	0.28	0.21	0.39	43	KWM-K-167-00891-00001		-1
004-1		rec rm (02)							
	1.1		Ultra Series StileAndRailDoor MultiBiFoldDoor Rectangle	0.28	0.21	0.39	43	KWM-K-167-00891-00001		-1
005-1		stair (4)							
	1.1		Ultra Series Casement Rectangle	0.29	0.22	0.40	46	KWM-K-32-01066-00001		50.13
	1.2		Ultra Series Casement Rectangle	0.26	0.26	0.47	46	KWM-K-34-01421-00001		65.16
006-1		kitchen (5)							
	1.1		Ultra Series Casement Rectangle	0.29	0.22	0.40	46	KWM-K-32-01066-00001		50.13
	1.2		Ultra Series Casement Rectangle	0.26	0.26	0.47	46	KWM-K-34-01421-00001		65.16
	1.3		Ultra Series Casement Rectangle	0.26	0.26	0.47	46	KWM-K-34-01421-00001		65.16
	1.4		Ultra Series Casement Rectangle	0.26	0.26	0.47	46	KWM-K-34-01421-00001		65.16
	1.5		Ultra Series Casement Rectangle	0.26	0.26	0.47	46	KWM-K-34-01421-00001		65.16
	1.6		Ultra Series Casement Rectangle	0.26	0.26	0.47	46	KWM-K-34-01421-00001		65.16
007-1		dining rm (6)							
	1.1		Ultra Series Casement Rectangle	0.29	0.22	0.40	46	KWM-K-32-01066-00001		50.13
	1.2		Ultra Series Casement Rectangle	0.26	0.26	0.47	46	KWM-K-34-01421-00001		65.16
	1.3		Ultra Series Casement Rectangle	0.29	0.22	0.40	46	KWM-K-32-01066-00001		50.13
008-1		dining (08)							
	1.1		Ultra Series StileAndRailDoor MultiBiFoldDoor Rectangle	0.28	0.21	0.39	43	KWM-K-167-00891-00001		-1
009-1		great rm (7)							
	1.1		Ultra Series Casement Rectangle	0.29	0.21	0.38	47	KWM-K-35-00705-00001		-1
	1.2		Ultra Series Casement Rectangle	0.29	0.21	0.38	47	KWM-K-35-00705-00001		-1
010-1		great rm (09)							
	1.1		Ultra Series StileAndRailDoor MultiBiFoldDoor Rectangle	0.28	0.21	0.39	43	KWM-K-167-00891-00001		-1
011-1		great rm (8)							
	1.1		Ultra Series Casement Rectangle	0.29	0.22	0.40	46	KWM-K-32-01066-00001		50.13
012-1		great rm (9)							
	1.1		Ultra Series Casement Rectangle	0.29	0.22	0.40	46	KWM-K-32-01066-00001		50.13
013-1		entry (04)							
	1.1		Ultra Series StileAndRailDoor Rectangle	0.27	0.19	0.34	47	KWM-K-254-00532-00001		75
	1.2		Ultra Series StileAndRailDoor Rectangle	0.27	0.19	0.34	47	KWM-K-254-00112-00001		-1
	1.3		Ultra Series StileAndRailDoor Rectangle	0.27	0.19	0.34	47	KWM-K-254-00532-00001		75
014-1		powder (10)							

Performance Information

Line	Unit	DP-	AAMA/WDMA/CSA 101/I.S.2/A440-05	AAMA/WDMA/CSA 101/I.S.2/A440-08	ASTM E 1886/1996	ES S Zone	ES S/C Zone	ES N/C Zone	ES N Zone
001-1									
	1.1	50.13				-1	Yes	No	No	No
002-1									
	1.1	50.13				-1	Yes	No	No	No
	1.2	50.13				-1	Yes	No	No	No
003-1									
	1.1	-1			N/A	N/A	N/A	N/A	N/A
004-1									
	1.1	-1			N/A	N/A	N/A	N/A	N/A
005-1									
	1.1	50.13				-1	Yes	No	No	No
	1.2	70.18				-1	No	No	No	No
006-1									
	1.1	50.13				-1	Yes	No	No	No
	1.2	70.18				-1	No	No	No	No
	1.3	70.18				-1	No	No	No	No
	1.4	70.18				-1	No	No	No	No
	1.5	70.18				-1	No	No	No	No
	1.6	50.13				-1	Yes	No	No	No
007-1									
	1.1	50.13				-1	Yes	No	No	No
	1.2	70.18				-1	No	No	No	No
	1.3	50.13				-1	Yes	No	No	No
008-1									
	1.1	-1			N/A	N/A	N/A	N/A	N/A
009-1									
	1.1	-1			N/A	N/A	Yes	No	No	No
	1.2	-1			N/A	N/A	Yes	No	No	No
010-1									
	1.1	-1			N/A	N/A	N/A	N/A	N/A	N/A
011-1									
	1.1	50.13				-1	Yes	No	No	No
012-1									
	1.1	50.13				-1	Yes	No	No	No
013-1									
	1.1	80				-1	N/A	N/A	N/A	N/A
	1.2	-1			N/A	N/A	N/A	N/A	N/A	N/A
	1.3	80				-1	N/A	N/A	N/A	N/A
014-1										

Performance Information

Line	Unit	ES Door N H/C	ES Door All	Canada ER	Canada Zone(s)	Metric U-Value	R&D Test#	Test Report#	Hallmark#	Texas Dept of Ins.#
001-1										
	1.1	N/A	N/A	+17		1.65	22046	QCT22-6595.20	413-R-1115	In Process
002-1										
	1.1	N/A	N/A	+17		1.65	22046	QCT22-6595.20	413-R-1115	In Process
	1.2	N/A	N/A	+17		1.65	22046	QCT22-6595.20	413-R-1115	In Process
003-1										
	1.1	No	No	-		1.59	N/A	N/A	N/A	N/A
004-1										
	1.1	No	No	-		1.59	N/A	N/A	N/A	N/A
005-1										
	1.1	N/A	N/A	+17		1.65	22046	QCT22-6595.20	413-R-1115	In Process
	1.2	N/A	N/A	+22		1.48	21095	QCT22-6595.22	413-R-1210	In Process
006-1										
	1.1	N/A	N/A	+17		1.65	22046	QCT22-6595.20	413-R-1115	In Process
	1.2	N/A	N/A	+22		1.48	21095	QCT22-6595.22	413-R-1210	In Process
	1.3	N/A	N/A	+22		1.48	21095	QCT22-6595.22	413-R-1210	In Process
	1.4	N/A	N/A	+22		1.48	21095	QCT22-6595.22	413-R-1210	In Process
	1.5	N/A	N/A	+22		1.48	21095	QCT22-6595.22	413-R-1210	In Process
	1.6	N/A	N/A	+17		1.65	22046	QCT22-6595.20	413-R-1115	In Process
007-1										
	1.1	N/A	N/A	+17		1.65	22046	QCT22-6595.20	413-R-1115	In Process
	1.2	N/A	N/A	+22		1.48	21095	QCT22-6595.22	413-R-1210	In Process
	1.3	N/A	N/A	+17		1.65	22046	QCT22-6595.20	413-R-1115	In Process
008-1										
	1.1	No	No	-		1.59	N/A	N/A	N/A	N/A
009-1										
	1.1	N/A	N/A	+15		1.65	N/A	N/A	N/A	N/A
	1.2	N/A	N/A	+15		1.65	N/A	N/A	N/A	N/A
010-1										
	1.1	No	No	-		1.59	N/A	N/A	N/A	N/A
011-1										
	1.1	N/A	N/A	+17		1.65	22046	QCT22-6595.20	413-R-1115	In Process
012-1										
	1.1	N/A	N/A	+17		1.65	22046	QCT22-6595.20	413-R-1115	In Process
013-1										
	1.1	No	No	+17		1.53	13028	ESP0134215P-1427	413-R-1256	Submitted
	1.2	No	No	+17		1.53	N/A	N/A	N/A	N/A
	1.3	No	No	+17		1.53	13028	ESP0134215P-1427	413-R-1256	Submitted
014-1										

Performance Information

Line	Unit	Florida Approval#	Miami-Dade Approval#
001-1			
	1.1	In Process	No
002-1			
	1.1	In Process	No
	1.2	In Process	No
003-1			
	1.1	N/A	N/A
004-1			
	1.1	N/A	N/A
005-1			
	1.1	In Process	No
	1.2	In Process	No
006-1			
	1.1	In Process	No
	1.2	In Process	No
	1.3	In Process	No
	1.4	In Process	No
	1.5	In Process	No
	1.6	In Process	No
007-1			
	1.1	In Process	No
	1.2	In Process	No
	1.3	In Process	No
008-1			
	1.1	N/A	N/A
009-1			
	1.1	N/A	N/A
	1.2	N/A	N/A
010-1			
	1.1	N/A	N/A
011-1			
	1.1	In Process	No
012-1			
	1.1	In Process	No
013-1			
	1.1	116453	No
	1.2	N/A	N/A
	1.3	116453	No
014-1			

Performance Information

	1.1		Ultra Series Casement Rectangle	0.29	0.22	0.40	46	KWM-K-32-01066-00001		50.13
015-1		service (06)								
	1.1		Ultra Series StileAndRailDoor Rectangle	0.31	0.09	0.15	-	KWM-K-254-02213-00001		120
016-1		laundry (11)								
	1.1		Ultra Series Casement Rectangle	0.29	0.22	0.40	46	KWM-K-32-01066-00001		50.13
017-1		bedroom (12)								
	1.1		Ultra Series Casement Rectangle	0.29	0.22	0.40	46	KWM-K-32-01066-00001		50.13
	1.2		Ultra Series Casement Rectangle	0.26	0.26	0.47	46	KWM-K-34-01421-00001		65.16
	1.3		Ultra Series Casement Rectangle	0.26	0.26	0.47	46	KWM-K-34-01421-00001		65.16
	1.4		Ultra Series Casement Rectangle	0.29	0.22	0.40	46	KWM-K-32-01066-00001		50.13
018-1		guest bed (13)								
	1.1		Ultra Series Casement Rectangle	0.29	0.22	0.40	46	KWM-K-32-01066-00001		50.13
	1.2		Ultra Series Casement Rectangle	0.29	0.22	0.40	46	KWM-K-32-01066-00001		50.13
019-1		mst bath (14)								
	1.1		Ultra Series Casement Rectangle	0.29	0.22	0.40	46	KWM-K-32-01066-00001		50.13
	1.2		Ultra Series Casement Rectangle	0.29	0.22	0.40	46	KWM-K-32-01066-00001		50.13
020-1		mst bath (15)								
	1.1		Ultra Series Casement Rectangle	0.26	0.26	0.47	46	KWM-K-34-01421-00001		65.16
	1.2		Ultra Series Casement Rectangle	0.26	0.26	0.47	46	KWM-K-34-01421-00001		65.16
	1.3		Ultra Series Casement Rectangle	0.26	0.26	0.47	46	KWM-K-34-01421-00001		65.16
	1.4		Ultra Series Casement Rectangle	0.26	0.26	0.47	46	KWM-K-34-01421-00001		65.16
	1.5		Ultra Series Casement Rectangle	0.29	0.22	0.40	46	KWM-K-32-01066-00001		50.13
	1.6		Ultra Series Casement Rectangle	0.26	0.26	0.47	46	KWM-K-34-01421-00001		65.16
	1.7		Ultra Series Casement Rectangle	0.26	0.26	0.47	46	KWM-K-34-01421-00001		65.16
	1.8		Ultra Series Casement Rectangle	0.26	0.26	0.47	46	KWM-K-34-01421-00001		65.16
	1.9		Ultra Series Casement Rectangle	0.26	0.26	0.34	47	KWM-K-34-01421-00001		65.16
021-1		mst bath (16)								
	1.1		Ultra Series Casement Rectangle	0.26	0.26	0.47	46	KWM-K-34-01421-00001		65.16
022-1		mst bath (17)								
	1.1		Ultra Series Casement Rectangle	0.29	0.22	0.40	46	KWM-K-32-01066-00001		50.13
023-1		mst bath (18)								
	1.1		Ultra Series Casement Rectangle	0.29	0.22	0.40	46	KWM-K-32-01066-00001		50.13
024-1		mst bed (19)								
	1.1		Ultra Series StileAndRailDoor MultiBiFoldDoor Rectangle	0.32	0.20	0.35	44	KWM-K-183-00622-00001		-1
025-1		mst bed (32)								
	1.1		Ultra Series SashSet FixedCasement Rectangle Transom	0.26	0.26	0.47	46	KWM-K-34-01421-00001		65.16
	1.2		Ultra Series SashSet FixedCasement Rectangle Transom	0.26	0.26	0.47	46	KWM-K-34-01421-00001		65.16
	1.3		Ultra Series SashSet FixedCasement Rectangle Transom	0.26	0.26	0.47	46	KWM-K-34-01421-00001		65.16
	1.4		Ultra Series SashSet FixedCasement Rectangle Transom	0.26	0.26	0.47	46	KWM-K-34-01421-00001		65.16
	1.5		Ultra Series SashSet FixedCasement Rectangle Transom	0.26	0.26	0.47	46	KWM-K-34-01421-00001		65.16

Performance Information

	1.1					-1	Yes	No	No	No
015-1										
	1.1	25				-1	N/A	N/A	N/A	N/A
016-1										
	1.1	50.13				-1	Yes	No	No	No
017-1										
	1.1	50.13				-1	Yes	No	No	No
	1.2	70.18				-1	No	No	No	No
	1.3	70.18				-1	No	No	No	No
	1.4	50.13				-1	Yes	No	No	No
018-1										
	1.1	50.13				-1	Yes	No	No	No
	1.2	50.13				-1	Yes	No	No	No
019-1										
	1.1	50.13				-1	Yes	No	No	No
	1.2	50.13				-1	Yes	No	No	No
020-1										
	1.1	70.18				-1	No	No	No	No
	1.2	70.18				-1	No	No	No	No
	1.3	70.18				-1	No	No	No	No
	1.4	70.18				-1	No	No	No	No
	1.5	50.13				-1	Yes	No	No	No
	1.6	70.18				-1	No	No	No	No
	1.7	70.18				-1	No	No	No	No
	1.8	70.18				-1	No	No	No	No
	1.9	70.18				-1	No	No	No	No
021-1										
	1.1	70.18				-1	No	No	No	No
022-1										
	1.1	50.13				-1	Yes	No	No	No
023-1										
	1.1	50.13				-1	Yes	No	No	No
024-1										
	1.1	-1				N/A	Yes	No	No	No
025-1										
	1.1	70.18				-1	No	No	No	No
	1.2	70.18				-1	No	No	No	No
	1.3	70.18				-1	No	No	No	No
	1.4	70.18				-1	No	No	No	No
	1.5	70.18				-1	No	No	No	No

Performance Information

	1.1	N/A	N/A	+17		1.65	22046	QCT22-6595.20	413-R-1115	In Process
015-1										
	1.1	No	No	+6		1.76	11152	ESP0142139-1454	413-R-1077	No
016-1										
	1.1	N/A	N/A	+17		1.65	22046	QCT22-6595.20	413-R-1115	In Process
017-1										
	1.1	N/A	N/A	+17		1.65	22046	QCT22-6595.20	413-R-1115	In Process
	1.2	N/A	N/A	+22		1.48	21095	QCT22-6595.22	413-R-1210	In Process
	1.3	N/A	N/A	+22		1.48	21095	QCT22-6595.22	413-R-1210	In Process
	1.4	N/A	N/A	+17		1.65	22046	QCT22-6595.20	413-R-1115	In Process
018-1										
	1.1	N/A	N/A	+17		1.65	22046	QCT22-6595.20	413-R-1115	In Process
	1.2	N/A	N/A	+17		1.65	22046	QCT22-6595.20	413-R-1115	In Process
019-1										
	1.1	N/A	N/A	+17		1.65	22046	QCT22-6595.20	413-R-1115	In Process
	1.2	N/A	N/A	+17		1.65	22046	QCT22-6595.20	413-R-1115	In Process
020-1										
	1.1	N/A	N/A	+22		1.48	21095	QCT22-6595.22	413-R-1210	In Process
	1.2	N/A	N/A	+22		1.48	21095	QCT22-6595.22	413-R-1210	In Process
	1.3	N/A	N/A	+22		1.48	21095	QCT22-6595.22	413-R-1210	In Process
	1.4	N/A	N/A	+22		1.48	21095	QCT22-6595.22	413-R-1210	In Process
	1.5	N/A	N/A	+17		1.65	22046	QCT22-6595.20	413-R-1115	In Process
	1.6	N/A	N/A	+22		1.48	21095	QCT22-6595.22	413-R-1210	In Process
	1.7	N/A	N/A	+22		1.48	21095	QCT22-6595.22	413-R-1210	In Process
	1.8	N/A	N/A	+22		1.48	21095	QCT22-6595.22	413-R-1210	In Process
	1.9	N/A	N/A	+22		1.48	21095	QCT22-6595.22	413-R-1210	In Process
021-1										
	1.1	N/A	N/A	+22		1.48	21095	QCT22-6595.22	413-R-1210	In Process
022-1										
	1.1	N/A	N/A	+17		1.65	22046	QCT22-6595.20	413-R-1115	In Process
023-1										
	1.1	N/A	N/A	+17		1.65	22046	QCT22-6595.20	413-R-1115	In Process
024-1										
	1.1	N/A	N/A	+15		1.82	N/A	N/A	N/A	N/A
025-1										
	1.1	N/A	N/A	+22		1.48	21095	QCT22-6595.22	413-R-1210	In Process
	1.2	N/A	N/A	+22		1.48	21095	QCT22-6595.22	413-R-1210	In Process
	1.3	N/A	N/A	+22		1.48	21095	QCT22-6595.22	413-R-1210	In Process
	1.4	N/A	N/A	+22		1.48	21095	QCT22-6595.22	413-R-1210	In Process
	1.5	N/A	N/A	+22		1.48	21095	QCT22-6595.22	413-R-1210	In Process

Performance Information

	1.1									In Process
015-1										
	1.1									No
016-1										
	1.1									In Process
017-1										
	1.1									In Process
	1.2									In Process
	1.3									In Process
	1.4									In Process
018-1										
	1.1									In Process
	1.2									In Process
019-1										
	1.1									In Process
	1.2									In Process
020-1										
	1.1									In Process
	1.2									In Process
	1.3									In Process
	1.4									In Process
	1.5									In Process
	1.6									In Process
	1.7									In Process
	1.8									In Process
	1.9									In Process
021-1										
	1.1									In Process
022-1										
	1.1									In Process
023-1										
	1.1									In Process
024-1										
	1.1									N/A
025-1										
	1.1									In Process
	1.2									In Process
	1.3									In Process
	1.4									In Process
	1.5									In Process

Performance Information

	1.2					-1	No	No	No	No
	1.3					-1	Yes	No	No	No
038-1										
	1.1					-1	Yes	No	No	No
039-1										
	1.1	-1				N/A	N/A	N/A	N/A	N/A
040-1										
	1.1	50.13				-1	Yes	No	No	No

Performance Information

	1.2	N/A	N/A	+22		1.48	21095	QCT22-6595.22	413-R-1210	In Process
	1.3	N/A	N/A	+17		1.65	22046	QCT22-6595.20	413-R-1115	In Process
038-1										
	1.1	N/A	N/A	+17		1.65	22046	QCT22-6595.20	413-R-1115	In Process
039-1										
	1.1	No	No	+14		1.76	N/A	N/A	N/A	N/A
040-1										
	1.1	N/A	N/A	+17		1.65	22046	QCT22-6595.20	413-R-1115	In Process

Performance Information

	1.1									In Process
015-1										
	1.1									No
016-1										
	1.1									In Process
017-1										
	1.1									In Process
	1.2									In Process
	1.3									In Process
	1.4									In Process
018-1										
	1.1									In Process
	1.2									In Process
019-1										
	1.1									In Process
	1.2									In Process
020-1										
	1.1									In Process
	1.2									In Process
	1.3									In Process
	1.4									In Process
	1.5									In Process
	1.6									In Process
	1.7									In Process
	1.8									In Process
	1.9									In Process
021-1										
	1.1									In Process
022-1										
	1.1									In Process
023-1										
	1.1									In Process
024-1										
	1.1									N/A
025-1										
	1.1									In Process
	1.2									In Process
	1.3									In Process
	1.4									In Process
	1.5									In Process

Performance Information

	1.2					-1	No	No	No	No
	1.3					-1	Yes	No	No	No
038-1										
	1.1					-1	Yes	No	No	No
039-1										
	1.1	-1				N/A	N/A	N/A	N/A	N/A
040-1										
	1.1	50.13				-1	Yes	No	No	No

Performance Information

	1.1	N/A	N/A	+17		1.65	22046	QCT22-6595.20	413-R-1115	In Process
015-1										
	1.1	No	No	+6		1.76	11152	ESP0142139-1454	413-R-1077	No
016-1										
	1.1	N/A	N/A	+17		1.65	22046	QCT22-6595.20	413-R-1115	In Process
017-1										
	1.1	N/A	N/A	+17		1.65	22046	QCT22-6595.20	413-R-1115	In Process
	1.2	N/A	N/A	+22		1.48	21095	QCT22-6595.22	413-R-1210	In Process
	1.3	N/A	N/A	+22		1.48	21095	QCT22-6595.22	413-R-1210	In Process
	1.4	N/A	N/A	+17		1.65	22046	QCT22-6595.20	413-R-1115	In Process
018-1										
	1.1	N/A	N/A	+17		1.65	22046	QCT22-6595.20	413-R-1115	In Process
	1.2	N/A	N/A	+17		1.65	22046	QCT22-6595.20	413-R-1115	In Process
019-1										
	1.1	N/A	N/A	+17		1.65	22046	QCT22-6595.20	413-R-1115	In Process
	1.2	N/A	N/A	+17		1.65	22046	QCT22-6595.20	413-R-1115	In Process
020-1										
	1.1	N/A	N/A	+22		1.48	21095	QCT22-6595.22	413-R-1210	In Process
	1.2	N/A	N/A	+22		1.48	21095	QCT22-6595.22	413-R-1210	In Process
	1.3	N/A	N/A	+22		1.48	21095	QCT

PLAN NOTES: (SHORING)

1. I INDICATES AUGERCAST WF SOLDIER PILE - "SPX" INDICATES TYPE. SEE SCHEDULE ON THIS SHEET FOR BALANCE OF INFORMATION.
2. ▭ INDICATES 4 X 12 DF#2 LAGGING.

PLAN NOTES: (FDN)

1. ● INDICATES 4-INCH DIAMETER SCHEDULE 40 PIPE PILE.

SOLDIER PILE SCHEDULE

MARK	AUGER SIZE (IN)	MEMBER SIZE	REQ'D EMBEDMENT (FT)	TOTAL COUNT
SP0	30"	W18 X 158	30'	
SP1	30"	W18 X 130	28'	
SP2	30"	W18 X 106	26'	
SP3	30"	W18 X 76	24'	
SP4	24"	W12 X 87	24'	
SP5	24"	W12 X 72	23'	
SP6	24"	W12 X 65	22'	
SP7	24"	W12 X 58	20'	
SP8	24"	W12 X 53	20'	
SP9	24"	W12 X 35	17'	
SP10	18"	W8 X 24	18'	
SP11	18"	W8 X 15	18'	

NOTES:

1. [T=[XX.X']B=XX.X'] INDICATES SITE GRADE AT TOP OF PILE/BOTTOM OF PILE.
2. EXX.X' INDICATES MINIMUM REQUIRED EMBEDMENT DEPTH OF PILE BELOW BOTTOM OF EXCAVATION.

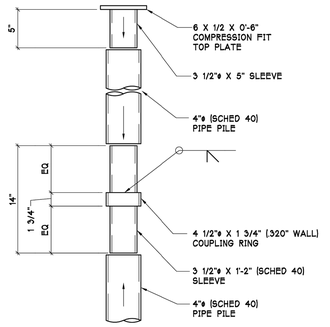

A — **TYP 4" PIPE PILE ASSEMBLY** 3/4" = 1'-0"

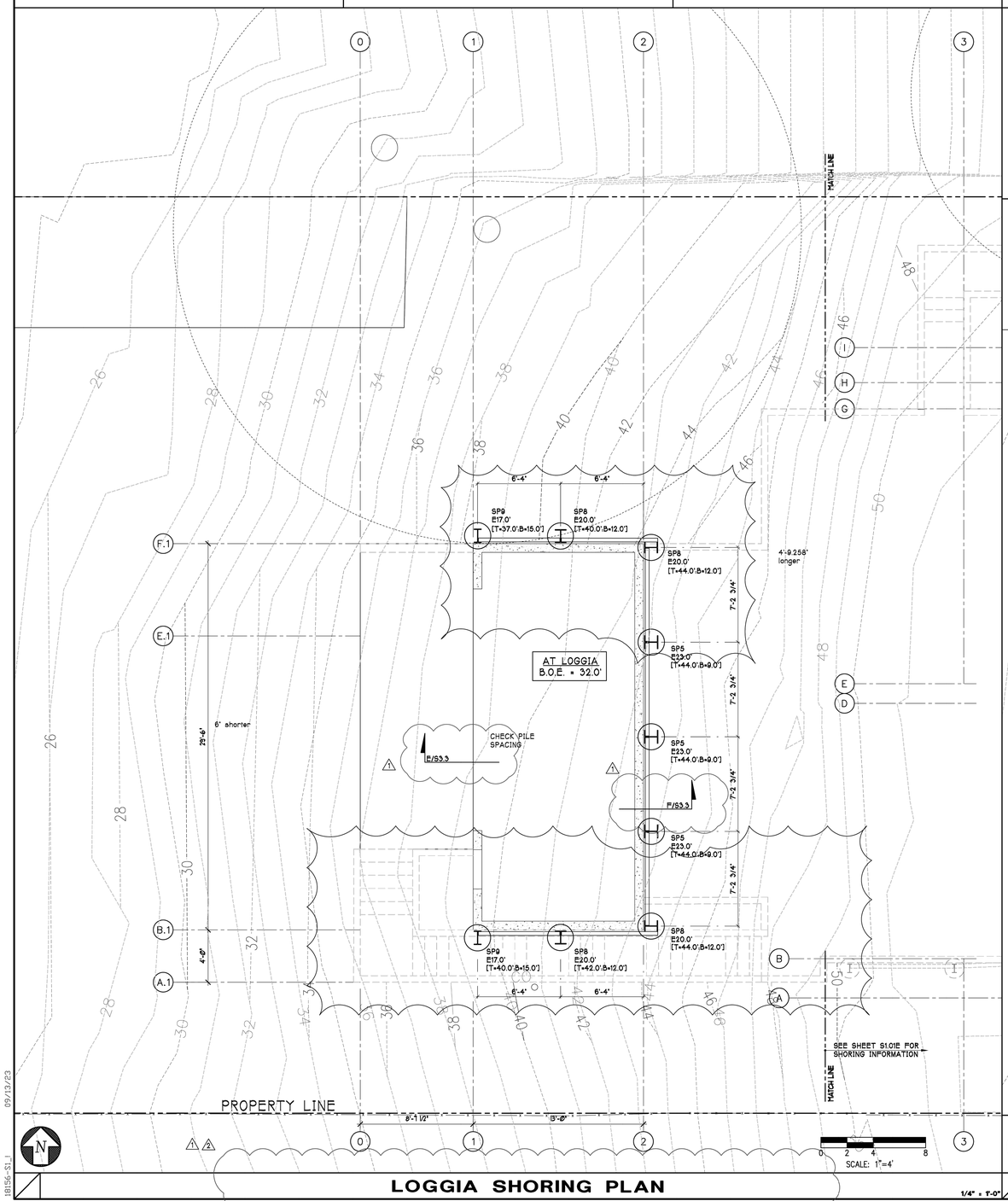

LOGGIA SHORING PLAN

1/4" = 1'-0"

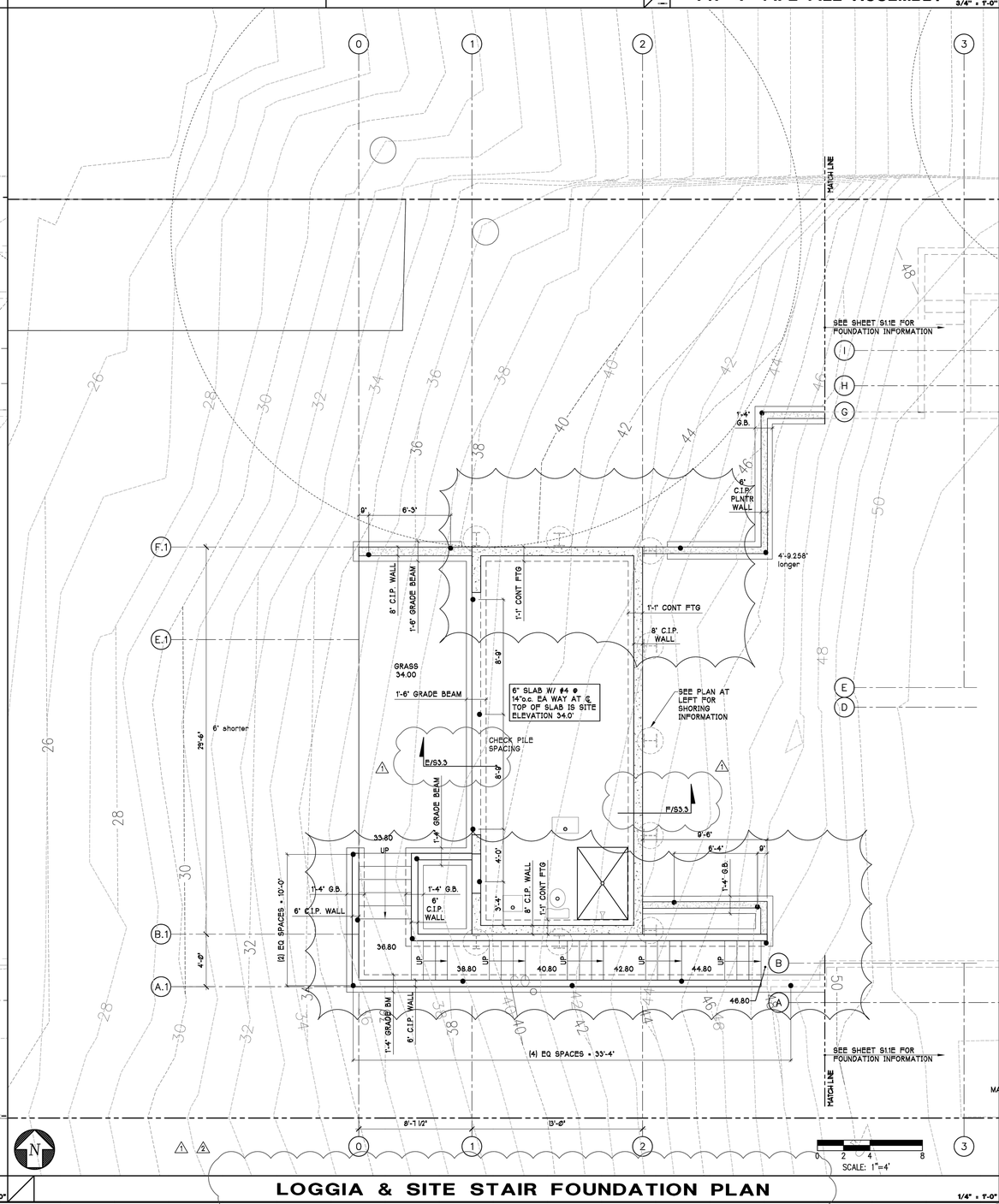

LOGGIA & SITE STAIR FOUNDATION PLAN

1/4" = 1'-0"

REVISIONS		
DATE	DESCRIPTION	
02/04/21	ADDED PILE DIMENSIONS	
04/10/23	CITY OF MERCER ISLAND CM# 1	1
09/13/23	CITY OF MERCER ISLAND CM# 2	2

B&T DESIGN & ENGINEERING, INC.
230 E. SUNSET WAY
ISSAQUAH, WA 98027
(425) 557-9765 (VOICE)
(425) 557-9765 (FAX)
B&T DESIGN & ENGINEERING

BRENT W. TAYLOR — STATE OF WASHINGTON — 23815 — REGISTERED PROFESSIONAL ENGINEER — STRUCTURAL

MURRAY RESIDENCE
4603 FOREST AVE SE
MERCER ISLAND, WA 98040
PROJECT TITLE

LOGGIA
SHORING PLAN &
FOUNDATION PLAN
SHEET TITLE

PROJECT	18156
DATE	03/29/21
DRAWN	NH
CHKD.	TB

SHEET :

S1.0W

OF

© 2023 B&T DESIGN & ENGINEERING, INC

09/13/23
18156-S1.J

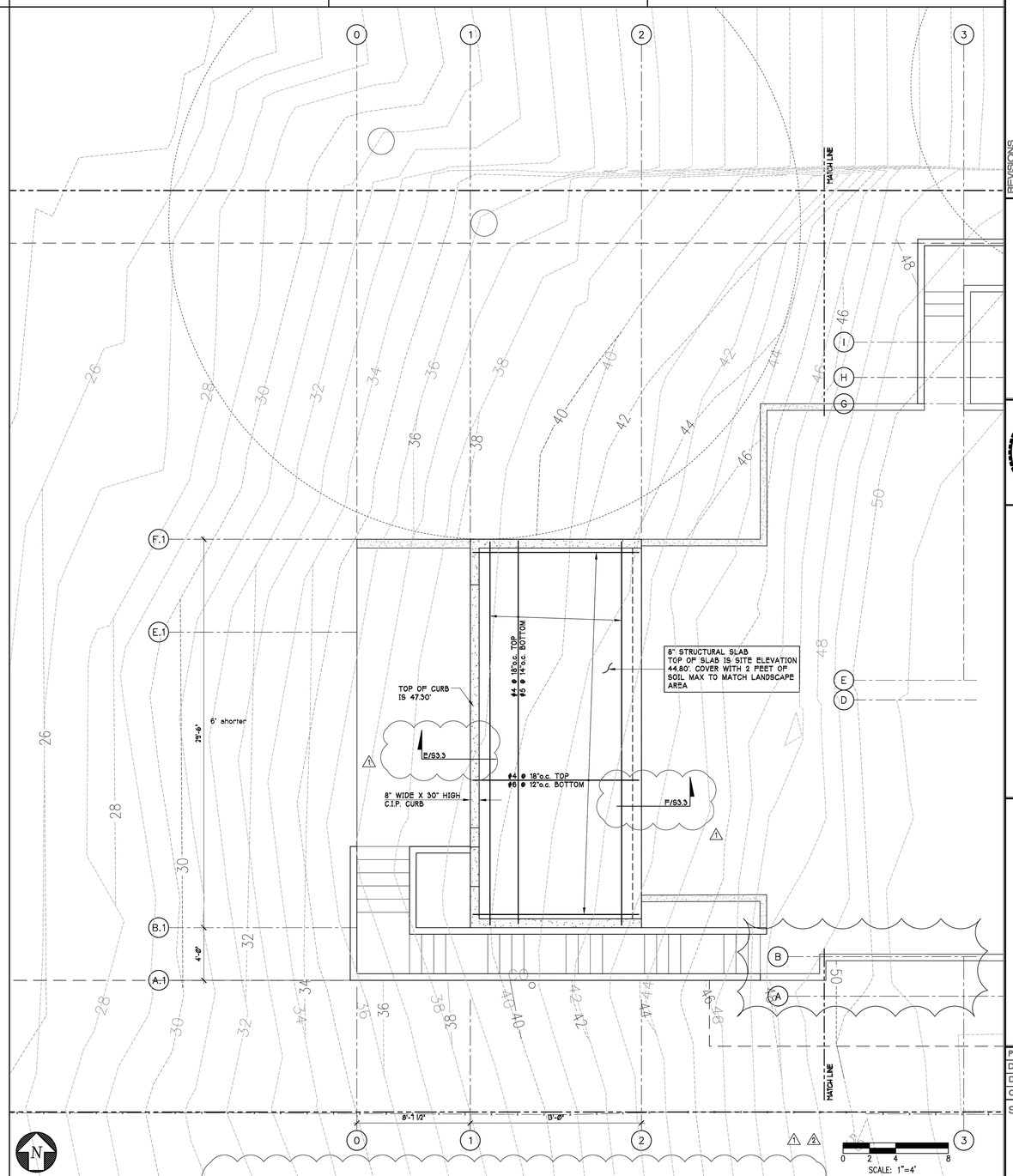

LOGGIA ROOF PLAN

1/4" = 1'-0"

REVISIONS

DATE	DESCRIPTION
04/10/23	CITY OF MERCER ISLAND CN#1
09/13/23	CITY OF MERCER ISLAND CN#1

B&T DESIGN & ENGINEERING
B & T DESIGN & ENGINEERING, INC.
250 E. SUNSET WAY
ISSAQUAH, WA 98027
(425) 557-0779 (PHONE)
(425) 557-0765 (FAX)

PROFESSIONAL ENGINEER
STATE OF WASHINGTON
23915
STRUCTURAL ENGINEER

MURRAY RESIDENCE
4603 FOREST AVE SE
MERCER ISLAND, WA 98040

PROJECT TITLE

LOGGIA
ROOF PLAN

SHEET TITLE

PROJECT	18156
DATE	03/29/21
DRAWN	NH
CHKD.	TB

SHEET :

S1.1W

OF

© 2023 B&T DESIGN & ENGINEERING, INC

18156-S1_1 09/13/23

PLAN NOTES: (SHORING)

1. INDICATES AUGERCAST WF SOLDIER PILE - "SPX" INDICATES TYPE. SEE SCHEDULE ON THIS SHEET FOR BALANCE OF INFORMATION.
2. INDICATES 4 X 12 DF#2 LAGGING.

SOLDIER PILE SCHEDULE

MARK	AUGER SIZE (IN)	MEMBER SIZE	REQ'D EMBEDMENT (FT)	TOTAL COUNT
SP0	30"	W18 X 158	30'	
SP1	30"	W18 X 130	28'	
SP2	30"	W18 X 106	26'	
SP3	30"	W18 X 76	24'	
SP4	24"	W12 X 87	24'	
SP5	24"	W12 X 72	23'	
SP6	24"	W12 X 65	22'	
SP7	24"	W12 X 58	20'	
SP8	24"	W12 X 53	20'	
SP9	24"	W12 X 35	17'	
SP10	18"	W8 X 24	18'	
SP11	18"	W8 X 15	18'	

NOTES:

1. [T=[XX.X']B=XX.X'] INDICATES SITE GRADE AT TOP OF PILE/BOTTOM OF PILE.
2. EXX.X' INDICATES MINIMUM REQUIRED EMBEDMENT DEPTH OF PILE BELOW BOTTOM OF EXCAVATION.

PROPERTY LINE

MATCH LINE

PROPERTY LINE - MATCH LINE

AT HOUSE:
BOTTOM OF EXCAVATION = 45.0'

AT GARAGE:
BOTTOM OF EXCAVATION = 63.5'

SEE SHEET S1.2 FOR FOUNDATION PLAN

SEE SHEET S1.02E FOR SHORING INFORMATION

WHAT IS TOW ALONG STAIRS?

PLANTER

TEL SENTRY

SP0 E30.0' [T=62.0'/B=15.0']
SP1 E28.0' [T=62.0'/B=15.5']
SP2 E26.0' [T=60.0'/B=19.0']
SP3 E24.0' [T=62.0'/B=21.0']
SP4 E24.0' [T=62.0'/B=19.5']
SP5 E23.0' [T=75.0'/B=40.5']
SP7 E20.0' [T=56.0'/B=25.0']
SP8 E20.0' [T=53.0'/B=25.0']
SP9 E17.0' [T=72.0'/B=46.5']
SP10 E18.0' [T=52.0'/B=27.0']
SP11 E18.0' [T=51.0'/B=27.0']

TOW 58.57'
TOW 63.5'
TOW 65.5'
TOW 57.24'
TOW 64.57'
TOW 64.25'
TOW 78.0'
TOW 75.57'
TOW 68.0'
TOW 70.5'

B.O.E=68.5'
B.O.E=66.0'
B.O.E=65.5'
B.O.E=63.5'

(6) EQ FOUR 60.5° = 90°

R = 45'-0" (VERIFY)

15'-1" (VERIFY)

1:1 (1/4" : 1'-0")

SCALE: 1"=4'

N

SHORING PLAN - HOUSE & GARAGE

1/4" = 1'-0"

REVISIONS		
DATE	DESCRIPTION	
02/04/21	ADDED PILE DIMENSIONS	
04/10/23	CITY OF MERCER ISLAND CM#	1
09/13/23	CITY OF MERCER ISLAND CM#	2

B&T DESIGN & ENGINEERING, INC.
230 E. SUNSET WAY
ISSAQUAH, WA 98027
(425) 557-9765 (FAX)

B&T DESIGN & ENGINEERING

REGISTERED PROFESSIONAL ENGINEER STATE OF WASHINGTON TIMOTHY BYRD 20046

MURRAY RESIDENCE
4603 FOREST AVE SE
MERCER ISLAND, WA 98040

PROJECT TITLE

HOUSE & GARAGE
SHORING PLAN

SHEET TITLE

PROJECT	18156
DATE	03/29/21
DRAWN	NH
CHKD.	TB

SHEET :

S1.01E

OF

© 2023 B&T DESIGN & ENGINEERING, INC

18156-S1_1 09/13/23

PLAN NOTES: (SHORING)

1. (I) INDICATES AUGERCAST WF SOLDIER PILE - "SPX" INDICATES TYPE. SEE SCHEDULE ON THIS SHEET FOR BALANCE OF INFORMATION.
2. ▭ INDICATES 4 X 12 DF#2 LAGGING.

PLAN NOTES: (FDN)

1. ● INDICATES 4-INCH DIAMETER SCHEDULE 40 PIPE PILE (NOT ALLOWABLE LOAD).

SOLDIER PILE SCHEDULE

MARK	AUGER SIZE (IN)	MEMBER SIZE	REQ'D EMBEDMENT (FT)	TOTAL COUNT
SP0	30"	W18 X 158	30'	
SP1	30"	W18 X 130	28'	
SP2	30"	W18 X 106	26'	
SP3	30"	W18 X 76	24'	
SP4	24"	W12 X 87	24'	
SP5	24"	W12 X 72	23'	
SP6	24"	W12 X 65	22'	
SP7	24"	W12 X 58	20'	
SP8	24"	W12 X 53	20'	
SP9	24"	W12 X 35	17'	
SP10	18"	W8 X 24	18'	
SP11	18"	W8 X 15	18'	

NOTES:

1. [T+(XX.X')B+XX.X'] INDICATES SITE GRADE AT TOP OF PILE/BOTTOM OF PILE.
2. EXX.X' INDICATES MINIMUM REQUIRED EMBEDMENT DEPTH OF PILE BELOW BOTTOM OF EXCAVATION.

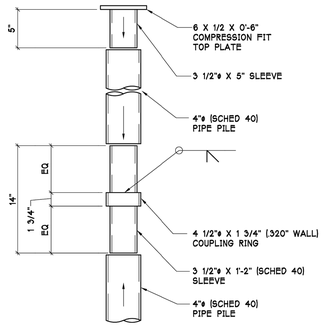

A — **TYP 4" PIPE PILE ASSEMBLY** 3/4" = 1'-0"

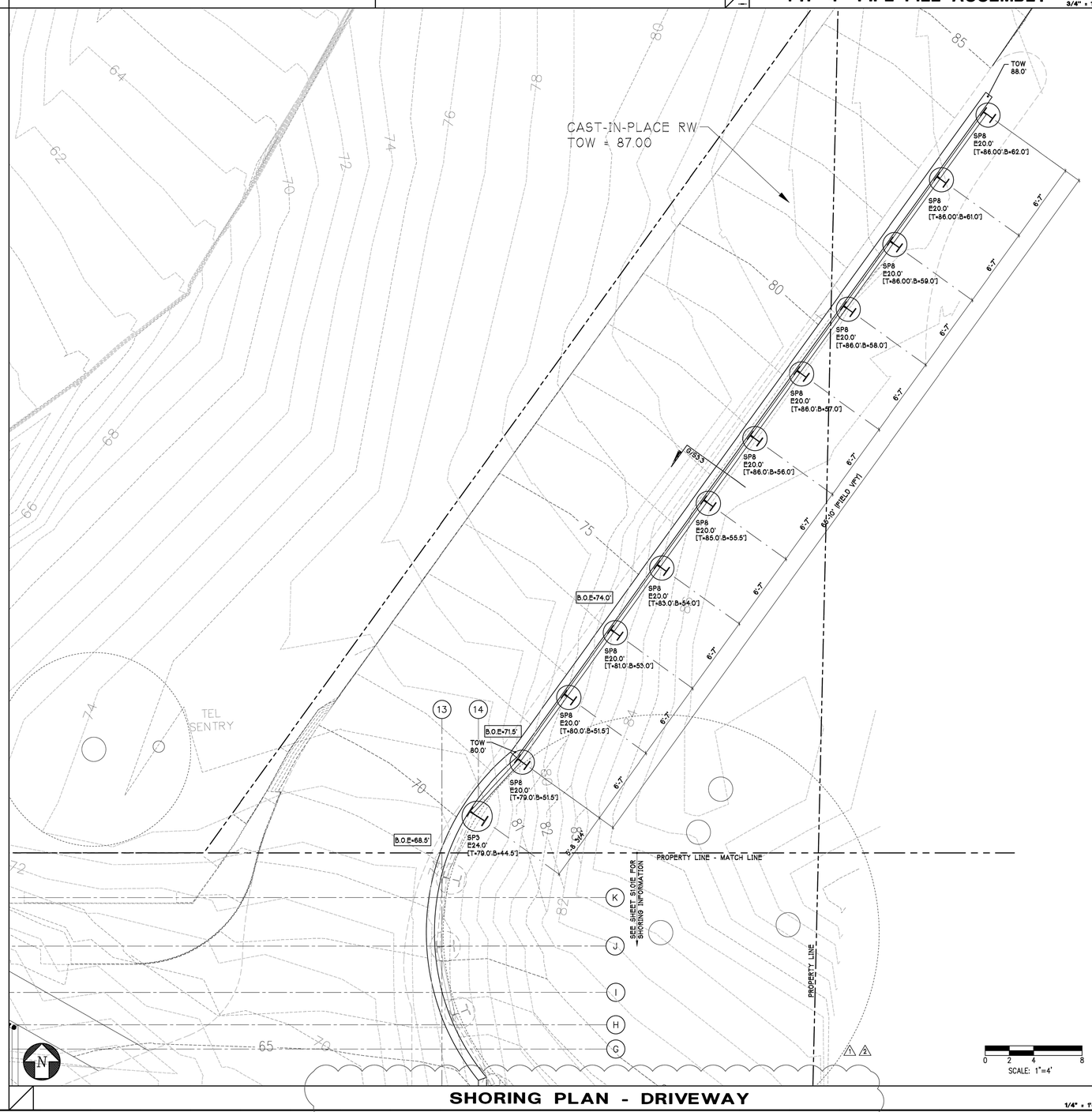

SHORING PLAN - DRIVEWAY 1/4" = 1'-0"

REVISIONS		
DATE	DESCRIPTION	
04/10/23	CITY OF MERCER ISLAND CM#1	1
09/13/23	CITY OF MERCER ISLAND CM#1	2

B&T DESIGN & ENGINEERING
B & T DESIGN & ENGINEERING, INC.
230 E. SUNSET WAY
ISSAQUAH, WA 98027
(425) 557-9765 (VOICE)
(425) 557-9765 (FAX)

BRETT W. BARTLETT — STATE OF WASHINGTON — 23915 — STRUCTURAL — PROFESSIONAL ENGINEER

MURRAY RESIDENCE
4603 FOREST AVE SE
MERCER ISLAND, WA 98040
PROJECT TITLE

DRIVEWAY
SHORING PLAN
SHEET TITLE

PROJECT	18156
DATE	03/15/23
DRAWN	NH
CHKD.	TB

SHEET :

S1.02E

OF

© 2023 B&T DESIGN & ENGINEERING, INC

18156-S1.1 09/13/23

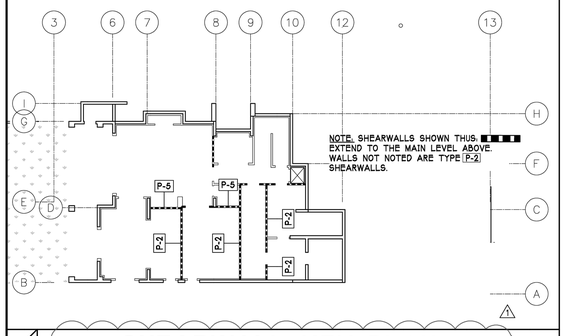

SHEARWALL KEY PLAN

1/16"=1'-0"

POST SCHEDULE			
MARK	SIZE & GRADE	COMMENTS	HARDWARE
P1	(2) 2 X 6 DF STUD		
P2	(3) 2 X 6 DF STUD		
P3	4 X 6 DF#2		
P4	6 X 6 DF#1		

POST SCHEDULE

PLAN NOTES: (FDN)

1. ● INDICATES 4-INCH DIAMETER SCHEDULE 40 PIPE PILE (10T ALLOWABLE LOAD).
2. TOP OF BASEMENT FLOOR STRUCTURAL SLAB IS REFERENCE ELEVATION 0'-0". SITE ELEVATION IS 47.5'.
3. INDICATES: BASEMENT LEVEL SHEARWALLS ABOVE. SHEATH AND NAIL SHEARWALLS PER SCHEDULE ON SHEET S2.3. SEE SHEARWALL KEY PLAN AT LEFT FOR SHEARWALL TYPES FROM BASEMENT LEVEL TO MAIN LEVEL.
4. (x-#) INDICATES KEY NOTE. SEE KEY NOTES ON THIS SHEET.
5. INDICATES SIMPSON HARDWARE. INSTALL PER MANUFACTURER'S SPECIFICATIONS.
6. (#) INDICATES POST TYPE. SEE POST SCHEDULE ON THIS SHEET FOR SIZE
   ■ = POST ABOVE U.N.O. ON PLAN.
   ☒ = POST BELOW.

   NOTE: (P#) M-A INDICATES LEVEL WHERE COLUMN STARTS-ENDS.
   "B" = BASEMENT
   "M" = MAIN FLOOR
   "U" = UPPER FLOOR
   "A" = ATTIC FLOOR
   "R" = ROOF.
7. ←(#) INDICATES SIMPSON HOLDOWN AT END OF SHEARWALL - LOCATE AT BASE OF BASEMENT LEVEL WALL. CONNECT TO DOUBLE STUD MINIMUM. (SEE SHEET S2.3 FOR HOLDOWN SCHEDULE & DETAILS.)
8. SEE SHEET S2.1 FOR BALANCE OF FRAMING NOTES AND SCHEDULES. SEE SHEETS S2.1, S2.2 & S2.3 FOR TYPICAL DETAILS.
9. SEE ARCHITECTURAL PLANS FOR DIMENSIONS.

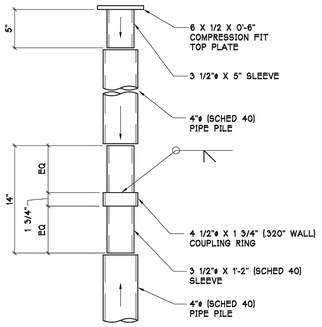

TYP 4" PIPE PILE ASSEMBLY

3/4" = 1'-0"

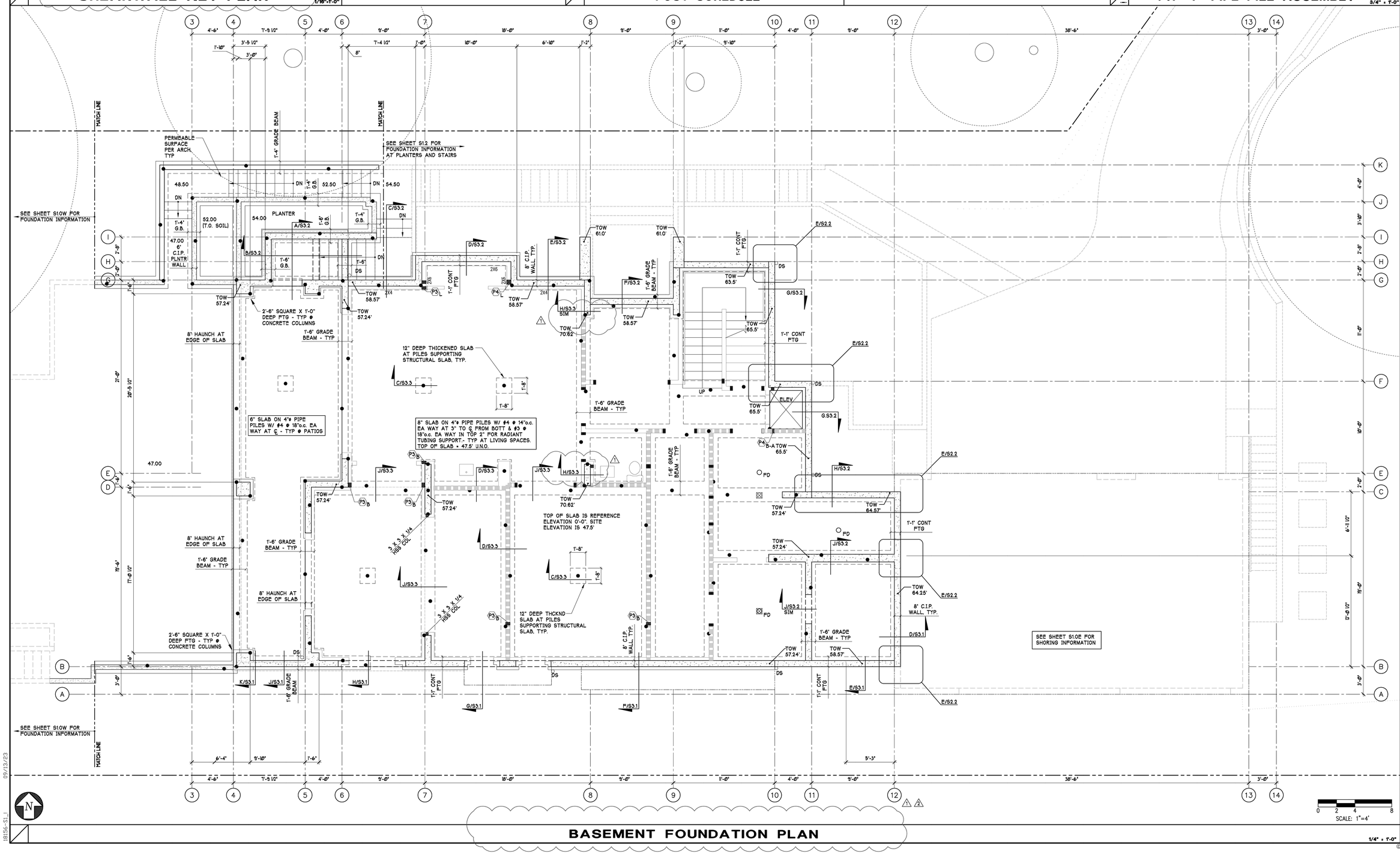

BASEMENT FOUNDATION PLAN

1/4" = 1'-0"

SCALE: 1"=4'

REVISIONS	
DATE	DESCRIPTION
04/10/23	CITY OF MERCER ISLAND CNH1
09/13/23	CITY OF MERCER ISLAND CNH1

B&T DESIGN & ENGINEERING, INC.
230 E. SUNSET WAY
ISSAQUAH, WA 98027
(425) 557-9765 (VOICE)
(425) 557-9765 (FAX)

PROJECT TITLE: MURRAY RESIDENCE
4603 FOREST AVE SE
MERCER ISLAND, WA 98040

SHEET TITLE: BASEMENT FOUNDATION PLAN

PROJECT	18156
DATE	03/29/21
DRAWN	NH
CHKD.	TB

SHEET : S1.1E

OF

09/13/23

18156-S1_1

© 2021 B&T DESIGN & ENGINEERING, INC

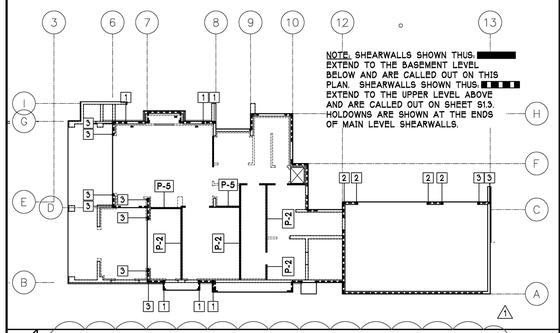

SHEARWALL & HOLDOWN KEY PLAN

1/16"=1'-0"

POST SCHEDULE

POST SCHEDULE			
MARK	SIZE & GRADE	COMMENTS	HARDWARE
P1	(2) 2 X 6 DF STUD		
P2	(3) 2 X 6 DF STUD		
P3	4 X 6 DF#2		
P4	6 X 6 DF#1		

POST SCHEDULE

PLAN NOTES: (FLR)

1. TOP OF MAIN FLOOR GYPCRETE IS +11'-6" ABOVE REFERENCE ELEVATION 0'-0". SITE ELEVATION IS 59.0'. TOP OF GARAGE FLOOR STRUCTURAL SLAB IS +17'-6" ABOVE REFERENCE ELEVATION 0'-0". SITE ELEVATION IS 65.0'.
2. INDICATES: BASEMENT LEVEL SHEARWALLS BELOW (x-#)
   INDICATES: MAIN LEVEL SHEARWALLS ABOVE. (x-#)
   SHEATH AND NAIL SHEARWALLS PER SCHEDULE ON SHEET S2.3. SEE KEY PLAN AT LEFT FOR SHEARWALL TYPES AT BASEMENT LEVEL. SEE KEY PLAN ON SHEET S1.3 FOR SHEARWALL TYPES AT MAIN LEVEL.
3. TYPICAL HEADER AT ALL INTERIOR AND EXTERIOR BEARING WALLS SHALL BE 4 X 8 DF#2 UNLESS NOTED OTHERWISE ON PLAN.
4. (x-#) INDICATES KEY NOTE. SEE KEY NOTES ON THIS SHEET.
5. INDICATES SIMPSON HARDWARE. INSTALL PER MANUFACTURER'S SPECIFICATIONS.
6. (#) INDICATES POST TYPE. SEE POST SCHEDULE ON THIS SHEET FOR SIZE
   ■ = POST ABOVE U.N.O. ON PLAN.
   ☒ = POST BELOW.
   NOTE: (P4 M-A) INDICATES LEVEL WHERE COLUMN STARTS-ENDS.
   "B" = BASEMENT
   "M" = MAIN FLOOR
   "U" = UPPER FLOOR
   "A" = ATTIC FLOOR
   "R" = ROOF.
7. •—(#) INDICATES SIMPSON HOLDOWN AT END OF SHEARWALL ABOVE - LOCATE AT BASE OF MAIN LEVEL WALL / TOP OF BASEMENT LEVEL WALL. SEE KEY PLAN AT LEFT FOR LOCATIONS. CONNECT TO DOUBLE STUD MINIMUM. (SEE SHEET S2.3 FOR HOLDOWN SCHEDULE & DETAILS.)
8. SEE SHEET S2.1 FOR BALANCE OF FRAMING NOTES AND SCHEDULES. SEE SHEETS S2.1, S2.2 & S2.3 FOR TYPICAL DETAILS.
9. SEE ARCHITECTURAL PLANS FOR DIMENSIONS.

FLOOR FRAMING DESIGN LOADS:

• DEAD LOAD	• 28 PSF
• LIVE LOAD	• 40 PSF
TOTAL DESIGN LOAD	• 68 PSF

DECK FRAMING DESIGN LOADS:

• DEAD LOAD (INCLUDES PAVERS)	• 22 PSF
• LIVE LOAD	• 60 PSF
TOTAL DESIGN LOAD	• 82 PSF

PLAN NOTES: (FDN)

1. ● INDICATES 4-INCH DIAMETER SCHEDULE 40 PIPE PILE.

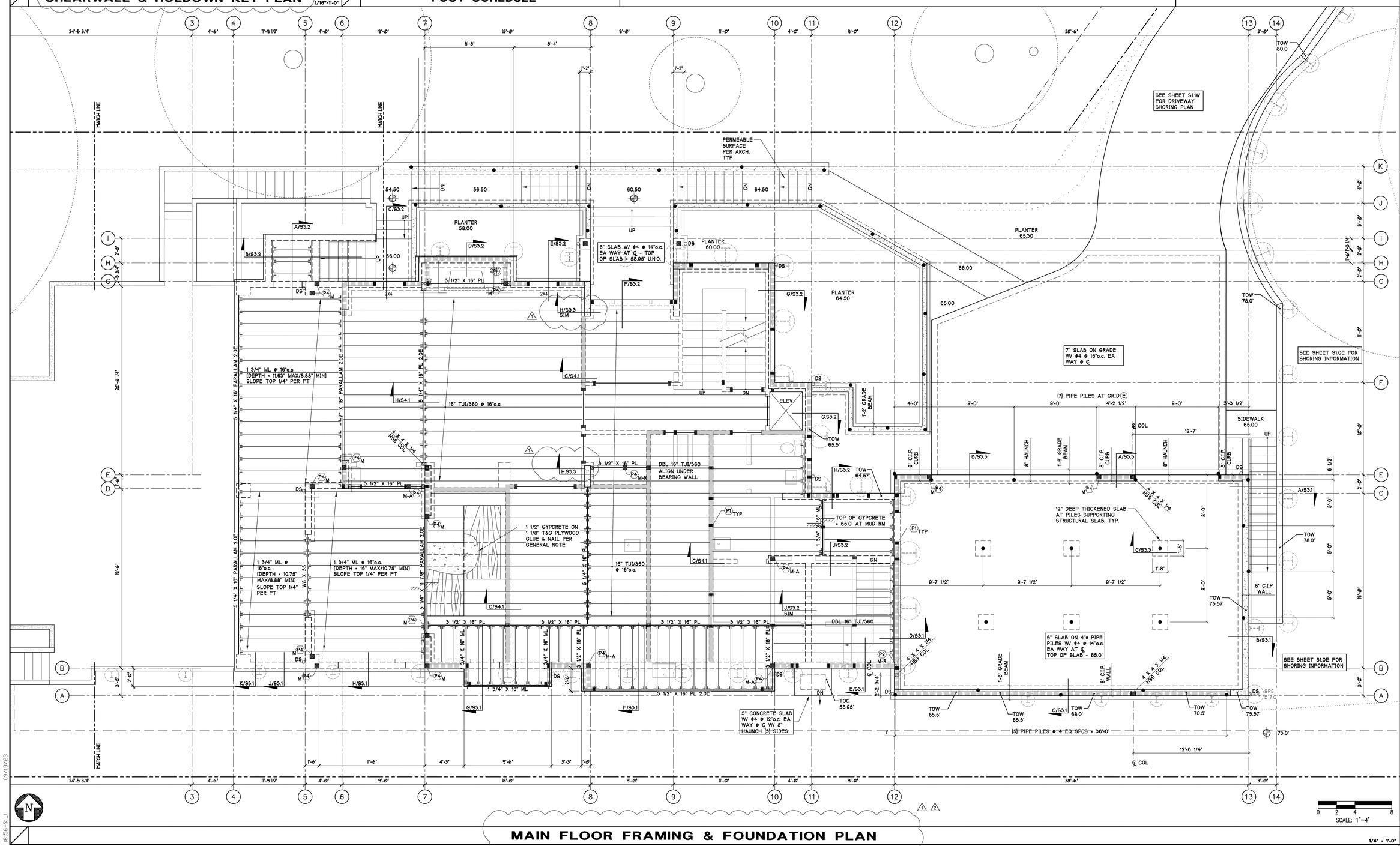

MAIN FLOOR FRAMING & FOUNDATION PLAN

1/4" = 1'-0"

REVISIONS		
DATE	DESCRIPTION	
02/04/21	ADDED PILE DIMENSIONS	
04/10/23	CITY OF MERCER ISLAND CM#1	1
09/13/23	CITY OF MERCER ISLAND CM#1	2

B & T DESIGN & ENGINEERING, INC.
230 E. SUNSET WAY
ISSAQUAH, WA 98027
(425) 557-9765 (VOICE)
(425) 557-9765 (FAX)
B&T DESIGN & ENGINEERING

B & T ENGINEERING WASHINGTON 22014 EXPIRES 10/13/2024 PROFESSIONAL ENGINEER

MURRAY RESIDENCE
4603 FOREST AVE SE
MERCER ISLAND, WA 98040
PROJECT TITLE

MAIN FLOOR FRAMING & FOUNDATION PLAN
SHEET TITLE

PROJECT	18156
DATE	03/29/21
DRAWN	NH
CHKD.	TB

SHEET :

S1.2

OF

09/13/23

18156-S1_1

© 2021 B&T DESIGN & ENGINEERING, INC

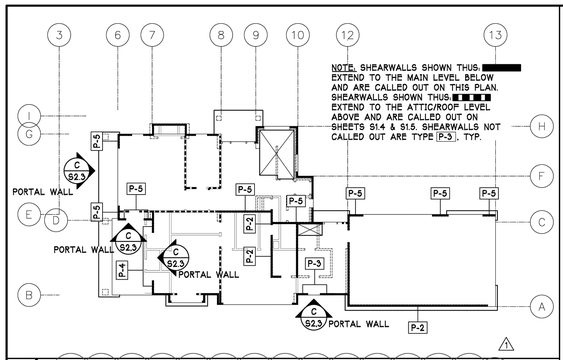

SHEARWALL KEY PLAN

1/16"=1'-0"

POST SCHEDULE

MARK	SIZE & GRADE	COMMENTS	HARDWARE
P1	(2) 2 X 6 DF STUD		
P2	(3) 2 X 6 DF STUD		
P3	4 X 6 DF#2		
P4	6 X 6 DF#1		

PLAN NOTES:

1. TOP OF UPPER FLOOR GYPCRETE IS +23'-6" ABOVE REFERENCE ELEVATION 0'-0". SITE ELEVATION IS 71.0'. TOP OF BONUS ROOM GYPCRETE IS +28'-6" ABOVE REFERENCE ELEVATION 0'-0". SITE ELEVATION IS 76.0'.
2. INDICATES: MAIN LEVEL SHEARWALLS BELOW (X-#)
   INDICATES: UPPER LEVEL SHEARWALLS ABOVE. (X-#)
   SHEATH AND NAIL SHEARWALLS PER SCHEDULE ON SHEET S2.3. SEE KEY PLAN AT LEFT FOR SHEARWALL TYPES AT MAIN LEVEL. WALLS NOT CALLED OUT SHALL BE TYPE P-3.
3. TYPICAL HEADER AT ALL INTERIOR AND EXTERIOR BEARING WALLS SHALL BE 4 X 8 DF#2 UNLESS NOTED OTHERWISE ON PLAN.
4. (X-#) INDICATES KEY NOTE. SEE KEY NOTES ON THIS SHEET.
5. INDICATES SIMPSON HARDWARE. INSTALL PER MANUFACTURER'S SPECIFICATIONS.
6. (#) INDICATES POST TYPE. SEE POST SCHEDULE ON THIS SHEET FOR SIZE
   ■ = POST ABOVE U.N.O. ON PLAN.
   ⊠ = POST BELOW.
   NOTE: (P#) M-A INDICATES LEVEL WHERE COLUMN STARTS-ENDS.
   "B" = BASEMENT
   "M" = MAIN FLOOR
   "U" = UPPER FLOOR
   "A" = ATTIC FLOOR
   "R" = ROOF
7. DIMENSIONS SHOWN THUS: [-X'-X"] ARE TO TOP OF STEEL BEAM FROM BOTTOM OF 1-1/8" PLYWOOD SUBFLOOR.
8. SEE SHEET S2.1 FOR BALANCE OF FRAMING NOTES AND SCHEDULES. SEE SHEETS S2.1, S2.2 & S2.3 FOR TYPICAL DETAILS.
9. SEE ARCHITECTURAL PLANS FOR DIMENSIONS.

FLOOR FRAMING DESIGN LOADS:

• DEAD LOAD	=	28 PSF
• LIVE LOAD	=	40 PSF
TOTAL DESIGN LOAD	=	68 PSF

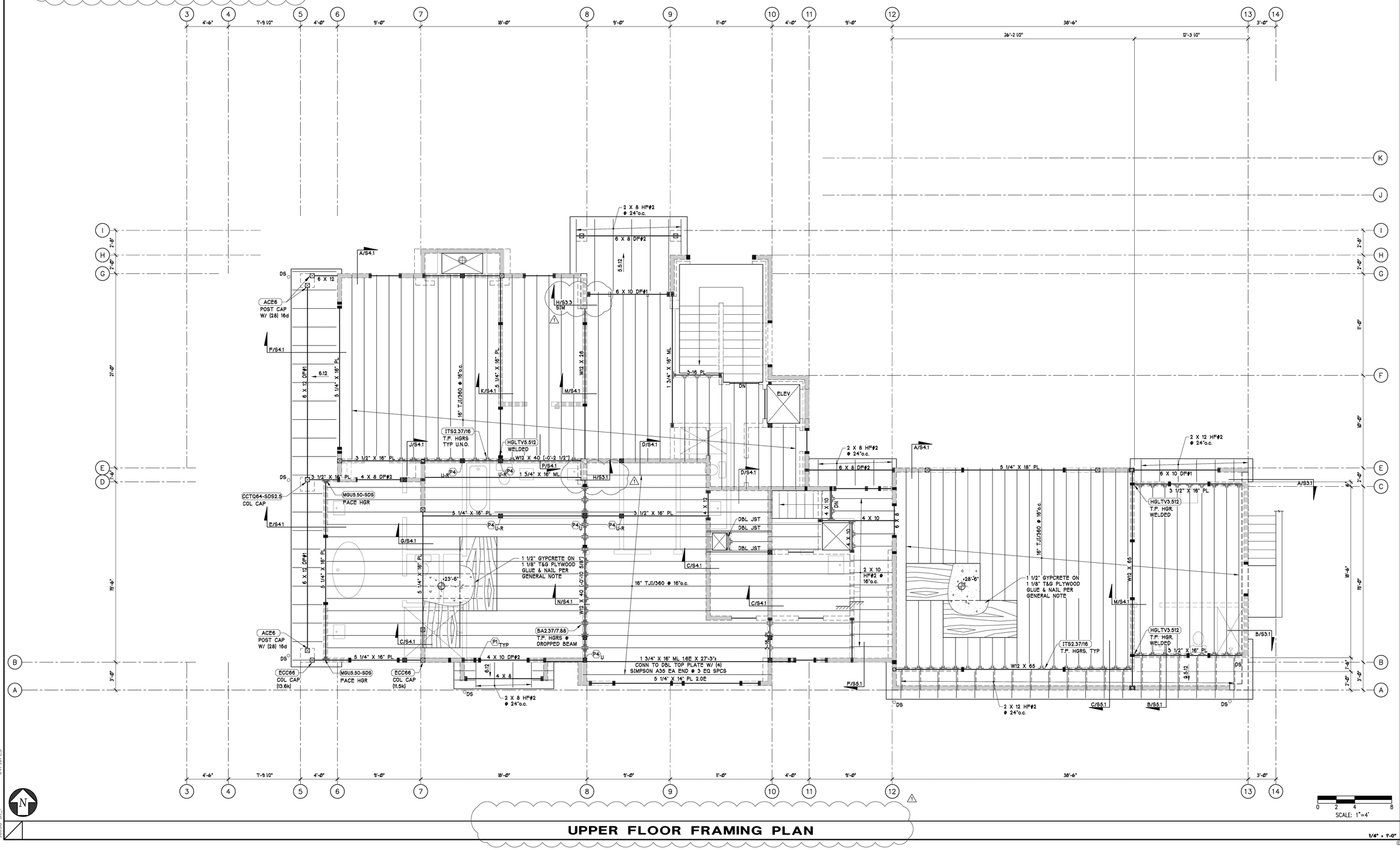

UPPER FLOOR FRAMING PLAN

1/4" = 1'-0"

N

REVISIONS		
DATE	DESCRIPTION	
04/10/23	CITY OF MERCER ISLAND CM#1	

DATE DESCRIPTION

B&T DESIGN & ENGINEERING
B & T DESIGN & ENGINEERING, INC.
230 E. SUNSET WAY
ISSAQUAH, WA 98027
(425) 557-9765 (FAX)

STRUCTURAL PROFESSIONAL ENGINEER — 29145 — REGISTERED — WASHINGTON — 3-11-2021 — B & T DESIGN & ENGINEERING, INC.

PROJECT TITLE: MURRAY RESIDENCE
4603 FOREST AVE SE
MERCER ISLAND, WA 98040

SHEET TITLE: UPPER FLOOR FRAMING PLAN

PROJECT	18156
DATE	03/29/21
DRAWN	NH
CHKD.	TB

SHEET :

S1.3

OF

© 2021 B&T DESIGN & ENGINEERING, INC

18156-S1_1 04/10/23

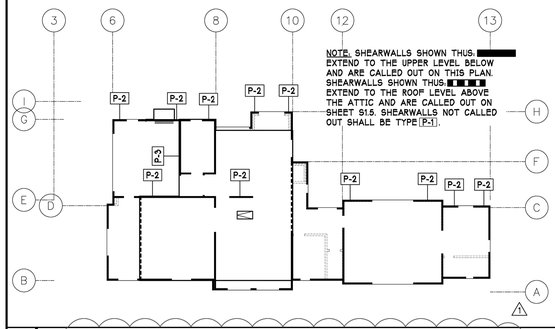

SHEARWALL KEY PLAN

1/16"=1'-0"

POST SCHEDULE			
MARK	SIZE & GRADE	COMMENTS	HARDWARE
P1	(2) 2 X 6 DF STUD		
P2	(3) 2 X 6 DF STUD		
P3	4 X 6 DF#2		
P4	6 X 6 DF#1		

POST SCHEDULE

PLAN NOTES:

1. TOP OF ATTIC JOISTS ARE +32'-1 1/4" ABOVE REFERENCE ELEVATION 0'-0". SITE ELEVATION IS 79.604'.
2. INDICATES: UPPER LEVEL SHEARWALLS BELOW (X-#)

   INDICATES: ROOF LEVEL SHEARWALLS ABOVE. (X-#)

   SHEATH AND NAIL SHEARWALLS PER SCHEDULE ON SHEET S2.3. SEE KEY PLAN AT LEFT FOR SHEARWALL TYPES AT UPPER LEVEL. WALLS NOT CALLED OUT SHALL BE TYPE P-1.
3. TYPICAL HEADER AT ALL INTERIOR AND EXTERIOR BEARING WALLS SHALL BE 4 X 8 DF#2 UNLESS NOTED OTHERWISE ON PLAN.
4. (X-#) INDICATES KEY NOTE. SEE KEY NOTES ON THIS SHEET.
5. INDICATES SIMPSON HARDWARE. INSTALL PER MANUFACTURER'S SPECIFICATIONS.
6. (#) INDICATES POST TYPE. SEE POST SCHEDULE ON THIS SHEET FOR SIZE
   - ■ • POST ABOVE U.N.O. ON PLAN.
   - ☒ • POST BELOW.

   NOTE: (P4) M-A INDICATES LEVEL WHERE COLUMN STARTS-ENDS.

   "B" • BASEMENT
   "M" • MAIN FLOOR
   "U" • UPPER FLOOR
   "A" • ATTIC FLOOR
   "R" • ROOF
7. SEE SHEET S2.1 FOR BALANCE OF FRAMING NOTES AND SCHEDULES. SEE SHEETS S2.1, S2.2 & S2.3 FOR TYPICAL DETAILS.
8. SEE ARCHITECTURAL PLANS FOR DIMENSIONS.

ATTIC FLOOR FRAMING DESIGN LOADS:

• DEAD LOAD	• 14 PSF
• LIVE LOAD	• 20 PSF
TOTAL DESIGN LOAD	• 34 PSF

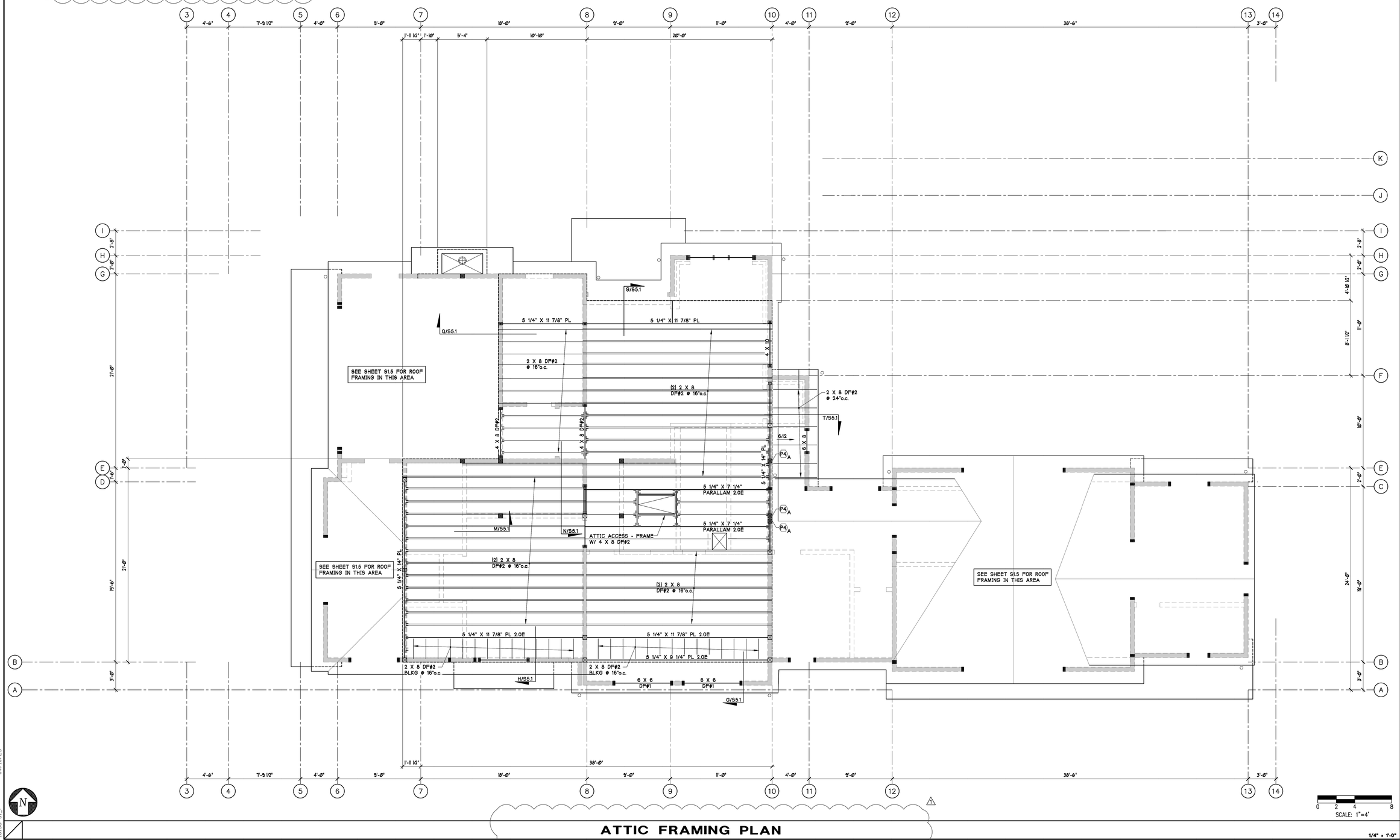

ATTIC FRAMING PLAN

0 2 4 8
SCALE: 1"=4'

1/4" = 1'-0"

REVISIONS		
DATE	DESCRIPTION	
04/10/23	CITY OF MERCER ISLAND CM#1	1

B&T DESIGN & ENGINEERING, INC.
230 E. SUNSET WAY
ISSAQUAH, WA 98027
(425) 557-9765 (VOICE)
(425) 557-9765 (FAX)

B&T DESIGN & ENGINEERING

REGISTERED PROFESSIONAL ENGINEER — BRYAN T. BALDWIN — STATE OF WASHINGTON — 22894

PROJECT TITLE: MURRAY RESIDENCE
4603 FOREST AVE SE
MERCER ISLAND, WA 98040

SHEET TITLE: ATTIC FRAMING PLAN

PROJECT	18156
DATE	03/29/21
DRAWN	NH
CHKD.	TB

SHEET :

S1.4

OF

04/10/23

18156-S1_1

© 2021 B&T DESIGN & ENGINEERING, INC

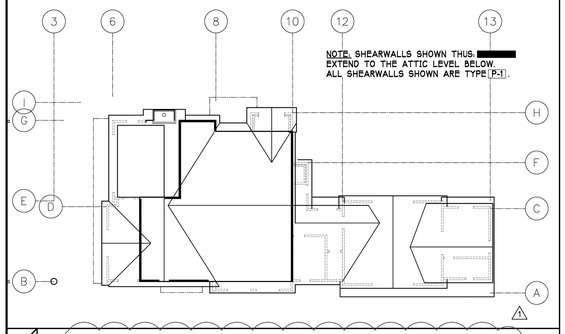

SHEARWALL KEY PLAN

1/16"=1'-0"

SIMPSON HARDWARE NOTES:

1. SIMPSON HANGER: HWU5.50/11.88 X SLD22.9 SKL32.3
2. SIMPSON HANGER: WPU1.81/11.88 X SLD22.9 SKR32.3
3. SIMPSON HANGER: WPU1.81/11.88 X SLU22.9 SKR32.3
4. SIMPSON HANGER: WPU1.81/11.88 X SLD15.3 SKL20.2
5. SIMPSON HANGER: WPU1.81/11.88 X SLU15.3 SKL20.2
6. SIMPSON HANGER: WPU1.81/11.88 X SLD16.2 SKR21.5
7. SIMPSON HANGER: WPU1.81/11.88 X SLU16.2 SKR21.5

PLAN NOTES:

1. <-X'-X"> INDICATES TOP OF DOUBLE TOP PLATE ABOVE FINISH FLOOR ELEVATION 76.0'. [+X'-X"] INDICATES TOP OF DOUBLE TOP PLATE ABOVE FINISH FLOOR ELEVATION 79.0'.
2. INDICATES SHEARWALLS BELOW. SHEATH AND NAIL SHEARWALLS PER SCHEDULE ON SHEET S2.3. SEE KEY PLAN AT LEFT FOR SHEARWALL LAYOUT. ALL SHEARWALLS SHALL BE TYPE P-1.
3. (X-#) INDICATES KEY NOTE. SEE KEY NOTES ON THIS SHEET.
4. INDICATES SIMPSON HARDWARE. INSTALL PER MANUFACTURER'S SPECIFICATIONS.
5. INDICATES AREAS OF OVERFRAMING. USE PREMANUFACTURED VALLEY SETS OR 2 X 6 HF#2 @ 24"o.c. TYPICAL. MAXIMUM UNSUPPORTED LENGTH OF 2 X 6 RAFTER SHALL BE 8'. FOR LONGER SPANS, PROVIDE 2 X 4 BRACES TO FRAMING BELOW.
6. SEE SHEET S2.1 FOR BALANCE OF FRAMING NOTES AND SCHEDULES. SEE SHEETS S2.1, S2.2 & S2.3 FOR TYPICAL DETAILS.
7. SEE ARCHITECTURAL PLANS FOR DIMENSIONS.

ROOF FRAMING DESIGN LOADS:

• DEAD LOAD	• 18 PSF
• SOLAR PANEL READY LOAD	• 03 PSF
• LIVE LOAD (SNOW)	• 25 PSF
TOTAL FLAT ROOF DESIGN LOAD	• 46 PSF

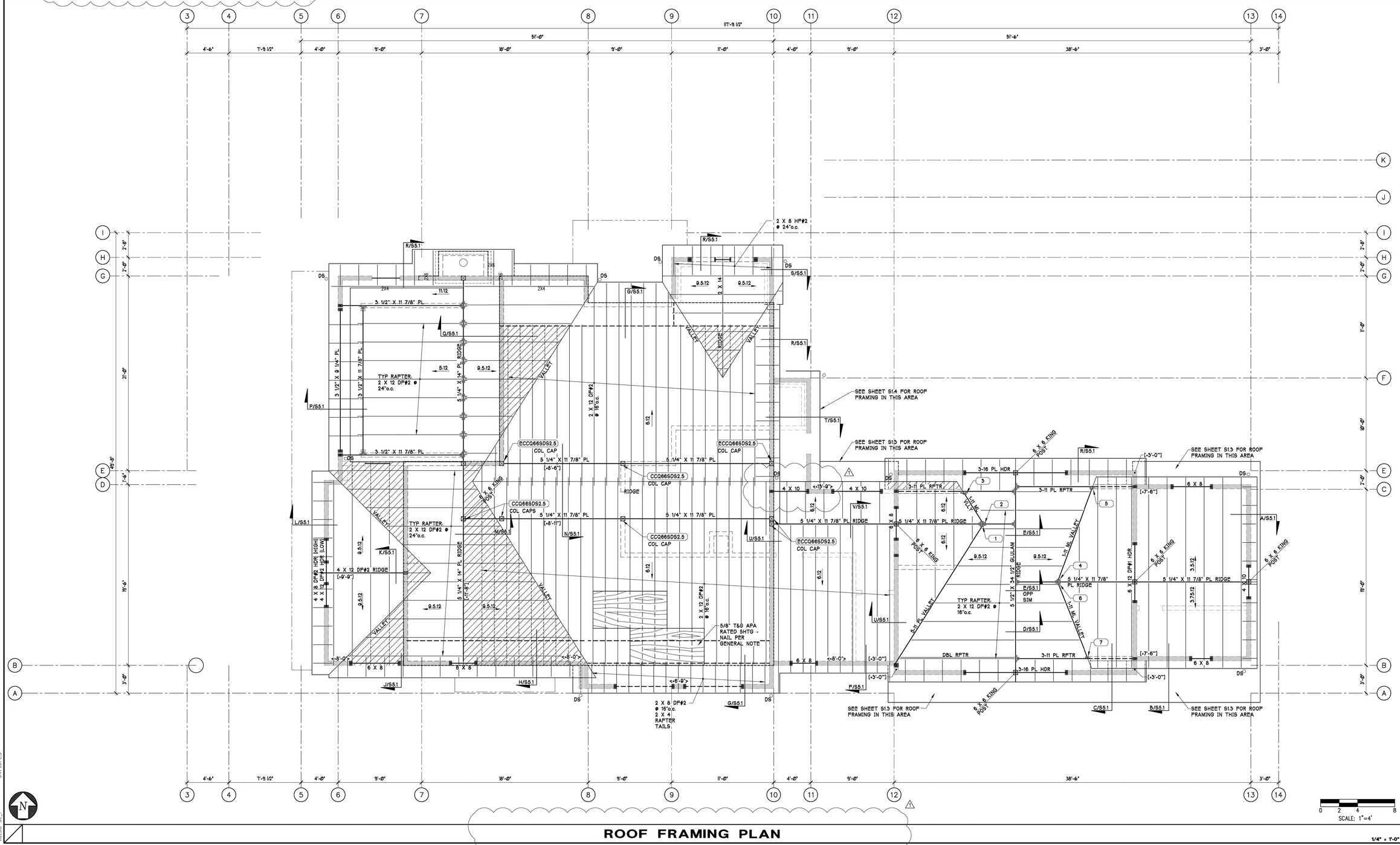

ROOF FRAMING PLAN

1/4" = 1'-0"

SCALE: 1"=4'

REVISIONS	
DATE	DESCRIPTION
04/10/23	CITY OF MERCER ISLAND CMF

B&T DESIGN & ENGINEERING, INC.
230 E. SUNSET WAY
ISSAQUAH, WA 98027
(425) 557-9765 (FAX)

MURRAY RESIDENCE
4603 FOREST AVE SE
MERCER ISLAND, WA 98040

PROJECT TITLE

ROOF
FRAMING PLAN

SHEET TITLE

PROJECT	18156
DATE	03/29/21
DRAWN	NH
CHKD.	TB

SHEET :

S1.5

OF

© 2021 B&T DESIGN & ENGINEERING, INC

18156-S1.1 04/10/23

REQUIRED VERIFICATION AND INSPECTION OF SOILS (TABLE 1705.6 IBC 2012)

VERIFICATION AND INSPECTION TASK	CONTINUOUS DURING TASK LISTED	PERIODICALLY DURING TASK LISTED
1. VERIFY MATERIALS BELOW SHALLOW FOOTINGS ARE ADEQUATE TO ACHIEVE THE DESIGN BEARING CAPACITY.	–	X
2. VERIFY EXCAVATIONS ARE EXTENDED TO PROPER DEPTH AND HAVE REACHED PROPER MATERIAL.	–	X
3. PERFORM CLASSIFICATION AND TESTING OF COMPACTED FILL MATERIALS.	–	X
4. VERIFY USE OF PROPER MATERIALS, DENSITIES AND LIFT THICKNESSES DURING PLACEMENT AND COMPACTION OF COMPACTED FILL.	X	–
5. PRIOR TO PLACEMENT OF COMPACTED FILL, OBSERVE SUBGRADE AND VERIFY THAT SITE HAS BEEN PREPARED PROPERLY.	–	X

REQUIRED VERIFICATION AND INSPECTION OF CONCRETE CONSTRUCTION (TABLE 1705.3 IBC 2012)

VERIFICATION AND INSPECTION	CONTINUOUS	PERIODIC	REFERENCED STANDARD [a]	IBC REFERENCE
1. INSPECTION OF REINFORCING STEEL, INCLUDING PRESTRESSING TENDONS, AND PLACEMENT	–	X	ACI 318: 3.5, 7.1–7.7	1910.4
2. INSPECTION OF REINFORCING STEEL WELDING IN ACCORDANCE WITH TABLE 1705.2.2, ITEM 2b	–	–	AWS D1.4 ACI 318: 3.5.2	–
3. INSPECTION OF ANCHORS CAST IN CONCRETE	–	X	ACI 318: D.9.2	
4. INSPECTION OF ANCHORS POST-INSTALLED IN HARDENED CONCRETE MEMBERS. [b] a. ADHESIVE ANDHORS INSTALLED IN HORIZONALLY OR UPWARDLY INCLINED ORIENTATIONS TO RESIST SUSTAINED TENSION LOADS. b. MECHANICAL ANCHORS AND ADHESIVE ANCHORS NOT DEFINED IN 4a.	X –	– X	ACI 318: D.9.2.4 ACI 318: D.9.2	
5. VERIFYING USE OF REQUIRED DESIGN MIX	–	X	ACI 318: CH 4, 5.2–5.4	1904.2, 1910.2, 1910.3
6. AT THE TIME FRESH CONCRETE IS SAMPLED TO FABRICATE SPECIMENS FOR STRENGTH TESTS, PERFORM SLUMP AND AIR CONTENT TESTS, AND DETERMINE THE TEMPERATURE OF THE CONCRETE	X	–	ASTM C 172 ASTM C 31 ACI 318: 5.6, 5.8	1910.10
7. INSPECTION OF CONCRETE AND SHOTCRETE PLACEMENT FOR PROPER APPLICATION TECHNIQUES	X	–	ACI 318: 5.9, 5.10	1910.6, 1910.7, 1910.8
8. INSPECTION FOR MAINTENANCE OF SPECIFIED CURING TEMPERATURE AND TECHNIQUES	–	X	ACI 318: 5.11–5.13	1910.9
9. INSPECTION OF PRESTRESSED CONCRETE: a. APPLICATION OF PRESTRESSING FORCES b. GROUTING OF BONDED PRESTRESSING TENDONS IN THE SEISMIC FORCE-RESISTING SYSTEM	X X	–	ACI 318: 18.20 ACI 318: 18.18.4	–
10. ERECTION OF PRECAST CONCRETE MEMBERS	–	X	ACI 318: CH. 16	–
11. VERIFICATION OF IN-SITU CONCRETE STRENGTH, PRIOR TO STRESSING OF TENDONS IN POST-TENSIONED CONCRETE AND PRIOR TO REMOVAL OF SHORES AND FORMS FROM BEAMS AND STRUCTURAL SLABS	–	X	ACI 318: 6.2	–
12. INSPECT FORMWORK FOR SHAPE, LOCATION AND DIMENSIONS OF THE CONCRETE MEMBER BEING FORMED	–	X	ACI 318: 6.1.1	–

NOTES:

a. WHERE APPLICABLE, SEE ALSO SECTION 1705.11, SPECIAL INSPECTION FOR SEISMIC RESISTANCE.

b. SPECIAL REQUIREMENTS FOR SPECIAL INSPECTION SHALL BE INCLUDED IN THE RESEARCH REPORT FOR THE ANCHOR ISSUED BY AN APPROVED SOURCE IN ACCORDANCE WITH ACI 355.2 OR OTHER QUALIFICATION PROCEDURES. WHERE SPECIFIC REQUIREMENTS ARE NOT PROVIDED, SPECIAL INSPECTION REQUIREMENTS SHALL BE SPECIFIED BY THE REGISTERED DESIGN PROFESSIONAL AND SHALL BE APPROVED BY THE BUILDING OFFICIAL PRIOR TO THE COMMENCEMENT OF THE WORK.

REQUIRED VERIFICATION AND INSPECTION OF STRUCTURAL STEEL CONSTRUCTION (SECTION 1705.2.1 IBC 2012, AISC 360)

SYSTEM OR MATERIAL	INSPECTION						REMARKS
	OSSC CODE REFERENCE	CODE OR STANDARD REFERENCE	INSPECTION (NOTES 1 AND 2)				
			CONTINUOUS	PERIODIC	OBSERVE	PERFORM	
CONTRACTOR QUALITY CONTROL REQUIRMENTS		AISC 360 CHAPTER N	–	–	X	X	CONTRACTOR TO PROVIDE QUALITY CONTROL FOR ALL ITEMS INDICATED TO BE OBSERVE AND/OR PERFORM IN TABLE
STEEL FABRICATION							
FABRICATION OF STRUCTURAL ELEMENTS	1704.2.5.2	AISC 360 N2	–	X	–	–	REFER TO INSPECTION OF FABRICATOR REQUIREMENTS
MATERIAL VERIFICATION OF STRUCTURAL STEEL	1705.2.1 2203.1 TABLE 1705.2	ASTM A6 ASTM STDS SPECIFIED IN CONSTRUCTION DOCUMENTS AISC 360 A3.1 AISC 360 N3.2	–	X	–	–	CERTIFIED MILL TEST REPORTS
FOR OTHER STEEL, IDENTIFICATION MARKINGS TO CONFORM TO ASTM STANDARDS SPECIFIED IN THE APPROVED CONSTRUCTION DOCUMENTS	TABLE 1705.2	APPLICABLE ASTM STANDARDS	–	X	–	–	MANUFACTURER'S CERTIFIED TEST REPORTS
MATERIAL VERIFICATION OF WELD FILLER METALS	TABLE 1705.2	AISC 360 A3.5 AISC 360 N3.2 APPLICABLE AWS A5 DOCUMENTS	–	X	–	–	MANUFACTURER'S CERTIFIED TEST REPORTS
STRUCTURAL STEEL WELDING							
VERIFYING USE OF PROPER WPS'S		AISC 360 N3.2	–	–	–	–	RETAIN A RECORD OF WELDING PROCEDURE SPECIFICATIONS
VERIFYING WELDER QUALIFICATIONS	1705.2.2.1		–	X	–	–	RETAIN A RECORD OF QUALIFICATION CARDS
COMPLETE AND PARTIAL JOINT PENETRATION GROOVE WELDS	TABLE 1705.2	AWS D1.1 SECTION 6	X	–	–	–	
MULTIPASS FILLET WELDS			X	–	–	–	
SINGLE PASS FILLET WELDS GREATER THAN 5/16"			X	–	–	–	ALL WELDS VISUALLY INSPECTED PER AWS D1.16.9
PLUG SLOT WELDS			X	–	–	–	
SINGLE PASS FILLET WELDS LESS THAN OR EQUAL TO 5/16"			–	X	–	–	
WELDING STAIR AND RAILING SYSTEMS	1705.2(2.5)	AWS D1.1 SECTION 6	–	X	–	–	ALL WELDS VISUALLY INSPECTED PER AWS D1.16.9
TS			–	–	–	X	

NOTES:

1. FOR STEEL INSPECTIONS PER AISC 360 AND 341:
   a. QUALITY ASSURANCE (QA) IS REQUIRED FOR EACH ITEM IN TABLES UNLESS SPECIFICALLY NOTED OTHERWISE.
   b. QUALITY CONTROL (QC) TO BE PROVIDED BY THE FABRICATOR, ERECTOR OR OTHER RESPONSIBLE CONTRACTOR AS APPLICABLE. CONTRACTOR AND SPECIAL INSPECTOR TO DOCUMENT QUALITY CONTROL AS REQUIRED IN AISC 360 SECTION N3 AND AISC 341 SECTION J2.

2. INSPECTION TYPES
   a. CONTINUOUS: THE FULL-TIME OBSERVATION OF WORK REQUIRING SPECIAL INSPECTION BY AN APPROVED SPECIAL INSPECTOR WHO IS PRESENT IN THE AREA WHERE THE WORK IS BEING PERFORMED.
   b. PERIODIC: THE PART-TIME OR INTERMITTENT OBSERVATION OF WORK REQUIRING SPECIAL INSPECTION BY AN APPROVED SPECIAL INSPECTOR WHO IS PRESENT IN THE AREA WHERE THE WORK HAS BEEN OR IS BEING PERFORMED AND AT THE COMPLETION OF THE WORK.
   c. OBSERVE: OBSERVE THESE FUNCTIONS ON A RANDOM, DAILY BASIS. OPERATIONS NEED NOT BE DELAYED PENDING OBSERVATIONS.
   d. PERFORM: INSPECTIONS SHALL BE PERFORMED PRIOR TO THE FINAL ACCEPTANCE OF THE ITEM.

GENERAL NOTE
CODE: INTERNATIONAL BUILDING CODE -- 2018 EDITION
ALL ASTM'S CALLED OUT ARE TO BE THE LATEST EDITION (1)

LIVE LOADS
BUILDING RISK CATEGORY II (IBC TABLE 1604.5)

GRAVITY LOADS:
SNOW . . . . GROUND SNOW LOAD PG = 36 PSF
. . . . FLAT ROOF SNOW LOAD PF = 25 PSF
. . . . SNOW EXPOSURE FACTOR CE = 1.0
. . . . SNOW IMPORTANCE FACTOR IS = 1.0 (1)
. . . . THERMAL FACTOR CT = 1.0
FLOOR . . . . 40 PSF

LATERAL LOADS:
WIND . . . . V = 110 MPH
. . . . EXPOSURE "C" KZT = 1.0
SEISMIC . . . . SITE CLASS "E"
SEISMIC DESIGN CATEGORY "D"
IMPORTANCE FACTOR IE = 1.0
S_S = 1.440G S_1 = 0.550G
F_A = 1.200 S_{DS} = 1.152G
R = 5 (SPECIAL REINFORCED CONCRETE SHEARWALLS)

FOUNDATION
FOUNDATION DESIGN WAS BASED UPON SOILS REPORT NO. JN20086 BY GEOTECH CONSULTANTS, INC. DATED MAY 5, 2020. THE FOLLOWING VALUES WERE USED:

LATERAL EARTH PRESSURE: . . . . . .ACTIVE-UNRESTRAINED; LEVEL BACKFILL = 45 PCF
. . . . . .ACTIVE-UNRESTRAINED; SLOPING BACKFILL = 55 PCF
. . . . . . 267 PCF EQUIVALENT FLUID PRESSURE (PASSIVE)
COEFFICIENT OF FRICTION: 0.3

ALL EXTERIOR FOOTINGS AND GRADE BEAMS SHALL BE A MINIMUM OF 1'-6" BELOW FINISH GRADE. SLABS AND FOOTINGS SHALL BEAR ON UNDISTURBED SOIL OR STRUCTURAL FILL COMPACTED TO 95% MAXIMUM DRY DENSITY PER ASTM D-1557 AS RECOMMENDED IN SOILS REPORT. CONTRACTOR SHALL PROVIDE PERMANENT POSITIVE DRAINAGE OF BUILDING PERIMETER. ALL SITE PREPARATION AND GRADING SHALL BE DONE IN ACCORDANCE WITH SOILS REPORT.

DRILLED PILES
PILE LENGTH SHOWN ON PLAN IS BASED ON DEPTH BELOW SITE ELEVATION X'. THE SOILS ENGINEER SHALL INSPECT THE INSTALLATION OF THE PILES AND WILL MAKE THE FINAL DETERMINATION OF PILE PENETRATION FOR LOADS SHOWN BELOW BASED ON CONDITIONS THAT HE/SHE OBSERVES DURING INSTALLATION OF EACH PILE. f'c FOR GROUT FOR PILING IS 4000 PSI. USE 10 SACKS CEMENT PER CUBIC YARD OF CONCRETE MINIMUM. ALTERNATE MIX DESIGN MAY BE SUBMITTED TO ENGINEER FOR APPROVAL. SUBMIT PILING RECORDS TO THE ENGINEER AND BUILDING DEPARTMENT FOR APPROVAL PRIOR TO POURING PILE CAPS.

PIPE PILES
STANDARD BLACK STEEL DRIVEN PIPE PILES ARE TO BE THE FOUNDATION SYSTEM TO SUPPORT THE DEAD LOADS ANTICIPATED FROM THE BUILDING AND ITS FOUNDATION.
FOUR INCH DIAMETER (SCHEDULE 40) PIPE PILES DRIVEN WITH A MINIMUM 800 POUND HYDRAULIC HAMMER TO A FINAL PENETRATION RATE OF ONE INCH OR LESS FOR ONE MINUTE OF CONTINUOUS DRIVING MAY BE ASSIGNED AN ALLOWABLE COMPRESSIVE LOAD OF 10 TONS PER PILE.
PILE CAPS SIMILAR TO CONVENTIONAL FOOTINGS SHOULD BE USED TO TRANSMIT LOADS TO THE PILES. NO LESS THAN TWO PILES SHOULD BE INCLUDED IN EACH PILE CAP.
WELDED COUPLERS SHOULD BE USED TO CONNECT SUBSEQUENT PIPE SECTIONS ON PILES THAT NEED TO EXTEND IN LENGTH.

(2) GEOTECH CONSULTANTS WILL BE REQUIRED TO DO ON-SITE MONITORING OF PILE DRIVING TO DETERMINE THEIR FINAL PENETRATION. LOAD TESTING IS REQUIRED ON THE PILES AS FOLLOWS: ASTM D1143 QUICK LOAD TEST ON A MINIMUM OF 3% OF PILES UP TO 5 PILES MAXIMUM (1 MINIMUM).

CONCRETE
f'c = 3000 psi FOR ALL WALLS, FOOTINGS & SLABS ON GRADE
ULTIMATE STRENGTH DESIGN METHOD USED. MIXING AND PLACING OF ALL CONCRETE AND SELECTION OF MATERIALS SHALL BE IN ACCORDANCE WITH THE IBC AND ACI CODE 318. PROPORTIONING OF AGGREGATE TO CEMENT SHALL BE SUCH AS TO PRODUCE A DENSE WORKABLE MIX WITH 5" MAXIMUM SLUMP WHICH CAN BE PLACED WITHOUT SEGREGATION OR EXCESS FREE SURFACE WATER. FOR ADMIXTURES, SEE SPECIFICATIONS. 1/2" CHAMFER ALL EXPOSED EDGES, UNLESS INDICATED OTHERWISE ON ARCHITECTURAL DRAWINGS. WATER CURING SHALL BE USED. AIR ENTRAIN ALL CONCRETE EXPOSED TO WEATHER WITH 3% TO 6% AIR BY VOLUME.

REINFORCING STEEL
ALL CONCRETE REINFORCING STEEL SHALL BE DEFORMED PER ASTM A615, GRADE 60 (fy=60,000 psi) EXCEPT ALL #4 SLAB DOWELS SHALL BE GRADE 40 (fy=40,000 psi). LAP CONTINUOUS REINFORCING BARS 30 BAR DIAMETERS, 1'-7" MINIMUM UNLESS NOTED OTHERWISE. CORNER BARS (1'-7" BEND) WILL BE PROVIDED FOR ALL HORIZONTAL REINF. DETAIL STEEL IN ACCORDANCE WITH "ACI MANUAL OF STANDARD PRACTICE OF DETAILING REINFORCED CONCRETE STRUCTURES". WELDED WIRE FABRIC (WWF) TO CONFORM WITH ASTM A185. REINFORCING HOOKS TO COMPLY WITH STANDARD ACI HOOKS.

UNLESS NOTED OTHERWISE, COVER TO MAIN REINFORCEMENT TO BE:
CONCRETE CAST AGAINST &
PERMANENTLY EXPOSED TO EARTH . . . . 3 INCHES
CONCRETE EXPOSED TO EARTH OR WEATHER . . 1 1/2 INCHES (#5 BARS & SMALLER)
. . . .2 INCHES (#6 THRU #18 BARS)
CONCRETE NOT EXPOSED TO WEATHER
OR IN CONTACT WITH GROUND . . . . .3/4 INCHES (#11 BAR & SMALLER)
. . . . 1 1/2 INCHES (#14 & #18 BARS)

STRUCTURAL STEEL
ALL WORK IN ACCORDANCE WITH "AISC SPECIFICATION FOR THE DESIGN, FABRICATION AND ERECTION OF STRUCTURAL STEEL FOR BUILDINGS", AND THE "CODE OF STANDARD PRACTICE".

STRUCTURAL STEEL BEAMS CONFORMS WITH . . . . ASTM A992 (Fy=50,000 PSI)
TUBE COLUMNS CONFORM WITH . . . . ASTM A500 GRADE B (Fy=46,000 PSI)
MISC STEEL PLATES CONFORM WITH . . . . .ASTM A36 (Fy=36,000 PSI)
STEEL PLATES AT MOMENT FRAMES CONFORM WITH . . . . ASTM A572 (Fy=50,000 PSI)
WELDHEAD STUDS CONFORM WITH . . . . .ASTM A108 (Fy=46,000 PSI)
BOLTS (WOOD TO STEEL) CONFORM WITH . . . . ASTM A307
BOLTS (STEEL TO STEEL) CONFORM WITH . . . . ASTM A325N

PROVIDE MINIMUM EMBEDMENT FOR ANCHOR BOLTS PER IBC TABLE 1908.2 FOR CONCRETE. ALL WELDING TO CONFORM WITH AWS D1.1 "CODE FOR WELDING IN BUILDING CONSTRUCTION". WELDS NOT SPECIFIED SHALL BE 1/4" CONTINUOUS FILLET MINIMUM. ALL WELDS BY WABO CERTIFIED WELDERS. USE FRESH 70XX ELECTRODES. SEE SPECIFICATIONS FOR ITEMS TO BE GALVANIZED. NOTE: BOLTS ARE NOT AN EQUAL SUBSTITUTE FOR WELDHEAD STUDS.

EPOXY DOWELS
EPOXY SHALL BE SIMPSON "EPOXY-TIE SET-XP" FROM SIMPSON STRONG-TIE PLEASANTON, CA. ANCHORING ADHESIVE SHALL BE A TWO-COMPONENT HIGH-SOLIDS EPOXY-BASED SYSTEM SUPPLIED IN MANUFACTURER'S STANDARD CARTRIDGE AND DISPENSED THROUGH A STATIC-MIXING NOZZLE SUPPLIED BY THE MANUFACTURER. THE ADHESIVE ANCHOR SHALL HAVE BEEN TESTED AND QUALIFIED FOR PERFORMANCE IN CRACKED AND UNCRACKED CONCRETE PER ICC-ES-AC308. DOWELS SHALL BE DEFORMED BAR PER "REINFORCING STEEL" NOTE ABOVE. PROVIDE SIZE AND EMBEDMENT AS SPECIFIED ON PLANS AND DETAILS. DOWELS SHALL BE INSTALLED PER SIMPSON STRONG-TIE'S INSTRUCTIONS FOR SET-XP EPOXY-TIE ADHESIVE.

EPOXY ANCHORS
EPOXY SHALL BE SIMPSON "EPOXY-TIE SET-XP" FROM SIMPSON STRONG-TIE PLEASANTON, CA. ANCHORING ADHESIVE SHALL BE A TWO-COMPONENT HIGH-SOLIDS EPOXY-BASED SYSTEM SUPPLIED IN MANUFACTURER'S STANDARD CARTRIDGE AND DISPENSED THROUGH A STATIC-MIXING NOZZLE SUPPLIED BY THE MANUFACTURER. THE ADHESIVE ANCHOR SHALL HAVE BEEN TESTED AND QUALIFIED FOR PERFORMANCE IN CRACKED AND UNCRACKED CONCRETE PER ICC-ES-AC308. ANCHORS SHALL BE THREADED ROD CONFORMING TO ASTM A36. PROVIDE DIAMETER AND EMBEDMENT AS SPECIFIED ON PLANS AND DETAILS. ANCHORS SHALL BE INSTALLED PER SIMPSON STRONG-TIE'S INSTRUCTIONS FOR SET-XP EPOXY-TIE ADHESIVE.

TIMBER
2X MEMBERS . . . . H.F.#2 (Fb=1270 psi REP.) (2 X 6 OR LESS)
H.F.#2 (Fb=1035 psi REP.) (2 X 8 OR LARGER)
4X MEMBERS . . . . D.F.#2 (Fb=1080 psi) (4 X 10 OR LESS)
D.F.#2 (Fb=990 psi) (4 X 12 OR LARGER)
6X MEMBERS . . . . D.F.#1 (Fb=1350 psi)
LUMBER NOT NOTED TO BE . . . . . . D.F.#2
BOLTS IN WOOD CONFORM WITH ASTM A307

ALL GRADES SHALL CONFORM TO "WWPA GRADING RULES FOR WESTERN LUMBER -- LATEST EDITION." BOLT HEADS AND NUTS BEARING AGAINST WOOD SHALL BE PROVIDED WITH STANDARD CUT WASHERS. PLATE WASHERS A MINIMUM OF 3" X 3" X 1/4" SHALL BE USED AT ALL SILL PLATE ANCHOR BOLTS. ALL NEW FRAMING LUMBER SHALL HAVE 19% MAXIMUM MOISTURE CONTENT AT TIME OF INSTALLATION. ALL WOOD IN CONTACT WITH CONCRETE SHALL BE PRESSURE TREATED. ALL NAILS ARE "COMMON" UNLESS INDICATED OTHERWISE. MINIMUM NAILING PER IBC TABLE 2304.9.1. S4S TYPICAL UNLESS NOTED OTHERWISE. SUBSTITUTION OF OTHERS SPECIES WITHOUT WRITTEN APPROVAL OF THE ENGINEER IS PROHIBITED. MISCELLANEOUS HANGERS TO BE SIMPSON OR I.C.C. APPROVED EQUAL. ALL CONNECTORS FOR PRESSURE TREATED LUMBER AND ALL NAILS IN EXTERIOR SHEATHING SHALL BE HOT-DIPPED GALVANIZED. NAIL ALL HOLES WITH NAILS AS SPECIFIED BY MANUFACTURER UNLESS NOTED OTHERWISE ON DRAWINGS.
ANCHOR BOLTS INTO CONCRETE SHALL HAVE MINIMUM EMBEDMENT PER IBC TABLE 1908.2.

NAILS
NAILS SHALL BE COMMON, AMERICAN OR CANADIAN MANUFACTURED ONLY WITH MINIMUM DIAMETERS AS FOLLOWS:

NAIL DESIGNATION	MINIMUM NAIL SHANK DIAMETER (IN)	MINIMUM NAIL LENGTH
8d	0.131"ø	2 1/2"
10d	0.148"ø	3"
16d SINKER OR 12d	0.148"ø	3 1/4"
16d	0.162"ø	3 1/2"
20d	0.192"ø	4"

MICROLAM & PARALLAM MEMBERS
ALL MICROLAM & PARALLAM MEMBERS SHALL BE TRUS JOIST OR ENGINEER APPROVED EQUAL WHICH DEMONSTRATES ICC AND NRB ACCEPTANCE. MINIMUM MEMBER PROPERTIES SHALL BE AS FOLLOWS:

1 3/4" MICROLAM – Fb = 2600 psi; Fv = 285 psi; E = 1900 KSI
3 1/2" PARALLAM – Fb = 2900 psi; Fv = 290 psi; E = 2000 KSI
5 1/4" PARALLAM – Fb = 2900 psi; Fv = 290 psi; E = 2000 KSI

SIMPSON STRONG-TIE HARDWARE
ALL FRAMING HARDWARE SHALL BE SIMPSON STRONG-TIE OR ENGINEER APPROVED EQUAL. CONTRACTOR SHALL INSTALL ALL FRAMING HARDWARE WITH SIZE, TYPE AND NUMBER OF FASTENERS SPECIFIED BY THE MANUFACTURER.

ROOF, FLOOR, DECK & SHEARWALL SHEATHING
ROOF SHEATHING SHALL BE 5/8" (NOMINAL) APA RATED SHEATHING 40/20, EXPOSURE 1, SIZED FOR SPACING. INSTALL PANELS WITH 1/8" SPACING AT END JOINTS AND 1/4" SPACING AT EDGE JOINTS. NAILING SHALL BE 10d (COMMON) AT 6"o.c. AT PANEL EDGES AND 12"o.c. AT INTERMEDIATE SUPPORTS U.N.O. ON PLANS.

FLOOR SHEATHING SHALL BE 1 1/8" (NOMINAL) APA RATED T&G STURD-I-FLOOR, EXPOSURE 1 AT INTERIOR APPLICATIONS, EXTERIOR AT DECKS, SIZED FOR SPACING. INSTALL WITH 1/8" SPACING BETWEEN EDGE AND END JOINTS. GLUE AND NAIL ALL SUPPORTS AND BLOCKING. NAILING SHALL BE 10d (COMMON) AT 6"o.c. AT PANEL EDGES AND 10"o.c. AT INTERMEDIATE SUPPORTS U.N.O. ON PLANS.

DECK & ATTIC FLOOR SHEATHING SHALL BE 3/4" (NOMINAL) APA RATED T&G STURD-I-FLOOR 48/24, EXPOSURE 1 AT INTERIOR APPLICATIONS, EXTERIOR AT DECKS, SIZED FOR SPACING. INSTALL WITH 1/8" SPACING BETWEEN EDGE AND END JOINTS. GLUE AND NAIL ALL SUPPORTS AND BLOCKING. NAILING SHALL BE 10d (COMMON) AT 6"o.c. AT PANEL EDGES AND 10"o.c. AT INTERMEDIATE SUPPORTS U.N.O. ON PLANS.

SHEARWALL SHEATHING SHALL BE 1/2" (NOMINAL) APA RATED SHEATHING WALL-16, EXPOSURE 1, SIZED FOR SPACING. ALLOW 1/8" SPACING AT PANEL ENDS AND EDGES UNLESS OTHERWISE RECOMMENDED BY THE PANEL MANUFACTURER. BLOCK ALL PANEL EDGES AND NAIL PER SHEARWALL SCHEDULE ON SHEET S2.1.

SHOP DRAWINGS
SUBMIT THREE SETS OF SHOP DRAWINGS TO THE ENGINEER AND ONE SET TO THE BUILDING DEPARTMENT FOR APPROVAL PRIOR TO FABRICATION FOR:
REINFORCING STEEL, MISC. & STRUCTURAL STEEL, PLYWOOD WEB JOISTS, MICROLAMS AND PARALLAMS.

SPECIAL INSPECTIONS
INSPECTIONS ARE TO BE PER IBC CHAPTER 17, SECTIONS 1704 AND 1705 AND ARE TO BE BY AN INDEPENDENT TESTING LAB AND APRROVED BY THE OWNER AND BUILDING DEPARTMENT AND ENGAGED BY AND PAID FOR BY THE OWNER PRIOR TO STARTING CONSTRUCTION.

FOUNDATION: INSPECT FOOTINGS AND EXCAVATIONS JUST PRIOR TO CONCRETE PLACEMENT TO INSURE MATERIAL IS DRY AND DENSE.

CONCRETE: TAKE CONCRETE CYLINDERS PER IBC SECTION 1705.3. VERIFY MIX DESIGN AND SLUMPS.

REINFORCING: VERIFY ALL REINFORCING IS PLACED IN ACCORDANCE WITH APPROVED PLANS. CHECK FOR REQUIRED COVER, SIZE AND GRADE.

FLOOR & ROOF DIAPHRAGM: NOTIFY BUILDING DEPARTMENT AND ENGINEER OF RECORD FOR INSPECTION 48 HOURS PRIOR TO COVERING.

WELDING: INSPECT ALL FIELD WELDING. VERIFY CERTIFICATION OF WELDERS. CONTRACTOR SHALL PAY FOR REWELDING AND REINSPECTION OF ALL WELDS NOT MEETING SPECS. INSPECTOR SHALL NOTIFY STRUCTURAL ENGINEER OF WELDS NOT MEETING SPECS.

EPOXY ANCHOR: SPECIAL INSPECTION IS REQUIRED.

SPECIAL CONDITIONS
CONTRACTOR SHALL VERIFY ALL DIMENSIONS IN FIELD AND SHALL PROVIDE ADEQUATE SHORING AND BRACING OF ALL STRUCTURAL MEMBERS DURING CONSTRUCTION. CONTRACTOR SHALL NOTIFY ENGINEER OF ALL FIELD CHANGES PRIOR TO INSTALLATION.

INSPECTION TABLES

GENERAL NOTES

WOOD STUD SCHEDULE

LEVEL [#4]	EXTERIOR WALLS	INTERIOR 2 X 6 WALLS	INTERIOR 2 X 4 WALLS [#3]
BASEMENT - MAIN FLOOR	2 X 6 DF#2 @ 16"o.c.	2 X 6 DF#2 @ 16"o.c.	3 X 4 DF#2 @ 16"o.c.
MAIN FLOOR - UPPER FLOOR	2 X 6 DF#2 @ 16"o.c.	2 X 6 DF#2 @ 16"o.c.	2 X 4 DF#2 @ 16"o.c.
UPPER FLOOR - ROOF	2 X 6 DF#2 @ 24"o.c.	2 X 6 DF STUD GRADE OR BETTER @ 24"o.c.	2 X 4 DF#2 @ 24"o.c.

TYPICAL NOTES:

1. ALL STUDS SHALL ALIGN UNDER FRAMING.
2. SEE SHEARWALL SCHEDULE FOR ADDITIONAL REQUIREMENTS FOR 3 X FRAMING IN HIGH STRESS SHEARWALLS.
3. PROVIDE (2) 2 X 4 STUDS AT STAIR OPENINGS WHERE LENGTH OF STUD EXCEEDS 10 FEET.

WOOD STUD SCHEDULE

POST SCHEDULE

REVISIONS

DATE	DESCRIPTION
04/10/23	CITY OF MERCER ISLAND CN#1 (1)
08/15/23	CITY OF MI - GEOTECHNICAL PEER REVIEW (2)

B&T DESIGN & ENGINEERING
B & T DESIGN & ENGINEERING, INC.
250 E. SUNSET WAY
ISSAQUAH, WA 98027
(425) 557-0779 (PHONE)
(425) 557-0765 (FAX)

TERRY E. BALDWIN
STATE OF WASHINGTON
23915
REGISTERED PROFESSIONAL ENGINEER
STRUCTURAL

MURRAY RESIDENCE
4603 FOREST AVE SE
MERCER ISLAND, WA 98040
PROJECT TITLE

INSPECTION SCHEDUELS GENERAL NOTES & SCHEDULES
SHEET TITLE

PROJECT	18156
DATE	03/29/21
DRAWN	NH
CHKD.	TB

SHEET :
S2.1
OF

© 2021 B&T DESIGN & ENGINEERING, INC

08/15/23
18156-S2_!

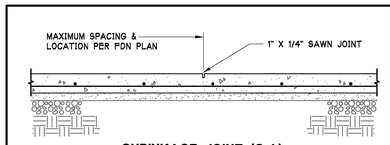

SHRINKAGE JOINT (S.J.)

A S2.2 SLAB JOINT DETAILS 3/4" = 1'-0"

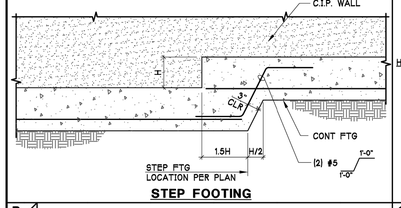

STEP FOOTING

B S2.2 STEP FOOTING 3/4" = 1'-0"

MINIMUM BAR LAPS FOR REINFORCING STEEL CONCRETE STRENGTH: SEE BELOW (CLASS B SPLICE - STAGGER SPLICES)					
SIZE	LAP LENGTH 3000 PSI OR LESS	LAP LENGTH 4000 PSI	SIZE	LAP LENGTH 3000 PSI OR LESS	LAP LENGTH 4000 PSI
#3	24"	24"	#7	63"	54"
#4	29"	25"	#8	72"	62"
#5	36"	31"	#9	81"	69"
#6	43"	38"	#10	90"	77"

MINIMUM BAR SPACING (INCLUDING LAPS): 2" CLR OR 1 1/2" X BAR DIAMETER

1.5 X LAP EQUALS 150% LAP LENGTH REQUIRED

ALL REINFORCING BARS SHALL EXTEND AS FAR AS POSSIBLE AND END IN A STANDARD 90 OR 180 HOOK UNLESS DETAILED OTHERWISE

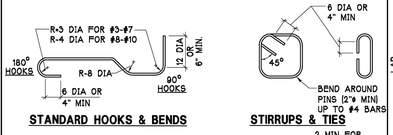

STANDARD HOOKS & BENDS

STIRRUPS & TIES

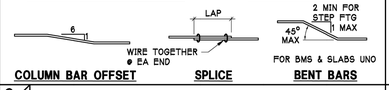

COLUMN BAR OFFSET SPLICE

FOR BMS & SLABS UNO

BENT BARS

C S2.2 TYP. REINFORCING DETAILS 3/4" = 1'-0"

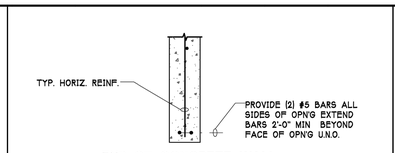

END OF CONCRETE WALL

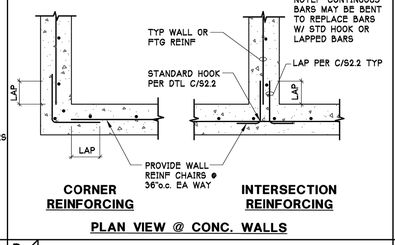

CORNER REINFORCING INTERSECTION REINFORCING

PLAN VIEW @ CONC. WALLS

D S2.2 CONCRETE WALL DETAILS 3/4" = 1'-0"

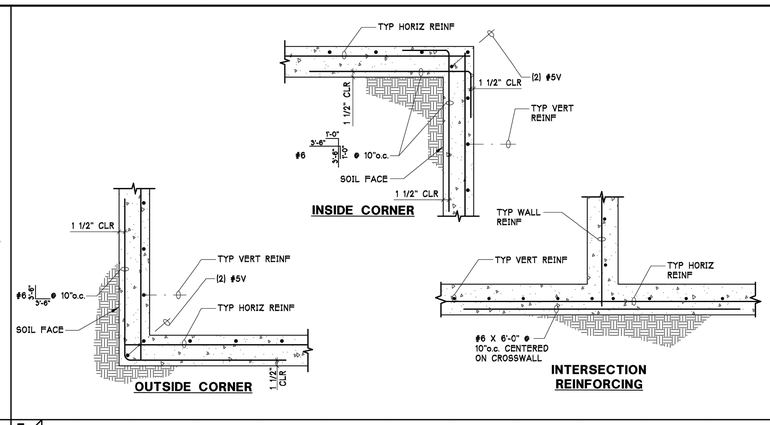

E S2.2 CONCRETE CORNER DETAILS AT COUNTERFORT WALLS 3/4" = 1'-0"

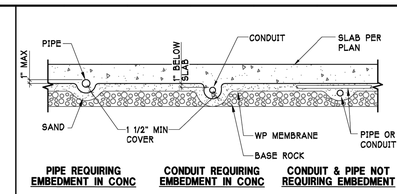

PIPE REQUIRING EMBEDMENT IN CONC CONDUIT REQUIRING EMBEDMENT IN CONC CONDUIT & PIPE NOT REQUIRING EMBEDMENT

F S2.2 TYP. REINFORCING DETAIL 3/4" = 1'-0"

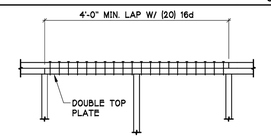

NOTE: LAP & NAIL TOP PLATES AS SHOWN AT ALL EXTERIOR, PARTY, PLUMBING WALLS AND SHEARWALLS @ ALL LEVELS.

G S2.2 DBL TOP PLATE SPLICE 3/4" = 1'-0"

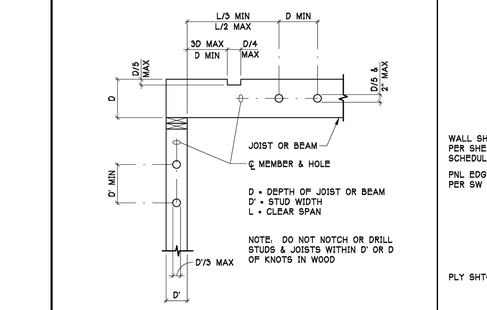

H S2.2 HOLES IN STUDS, JOISTS & BEAMS 3/4" = 1'-0"

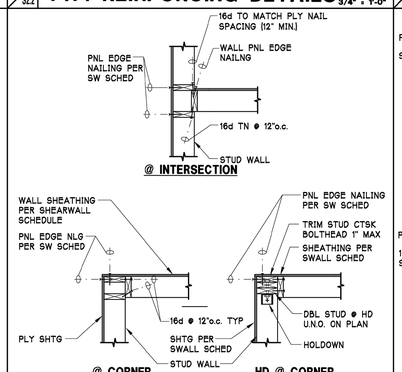

PLAN VIEW STUD WALL DETAILS

J S2.2 STUD WALL DETAILS 3/4" = 1'-0"

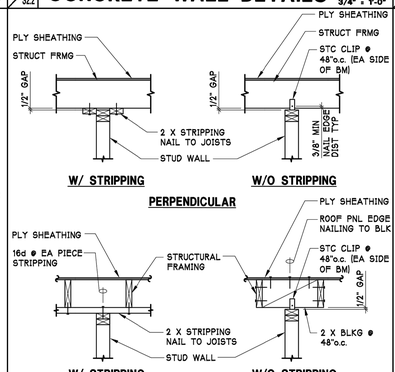

TYPICAL NON-BEARING STUD WALL DETAILS

K S2.2 STUD WALL DETAILS 3/4" = 1'-0"

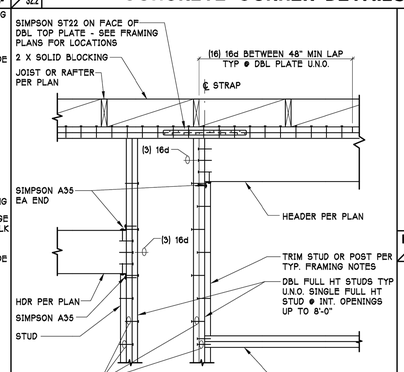

L S2.2 STUD WALL & HDR DETAIL 3/4" = 1'-0"

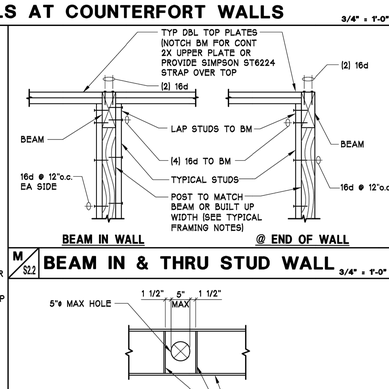

M S2.2 BEAM IN & THRU STUD WALL 3/4" = 1'-0"

N S2.2 TYP PENETRATION IN WF BEAM 3/4" = 1'-0"

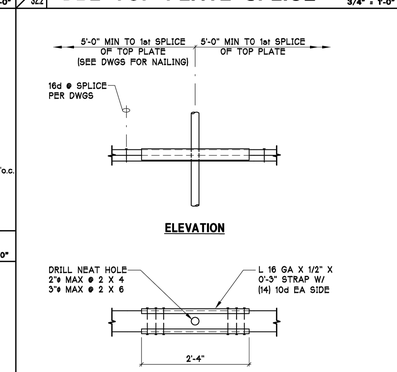

P S2.2 PIPE THRU DBL TOP PLATE 3/4" = 1'-0"

TABLE 1 JOIST DEPTH	JOIST SERIES	ROUND HOLE SIZE 2"	4"	6"	8"	10"	12"	14"	16"	18"	20"
11 7/8"	TJI/L65	A	B	E	–	–	–	–	–	–	–
16"	TJI/L65	A	B	C	E	–	–	–	–	–	–

MINIMUM DISTANCE (d) FROM INSIDE FACE OF ANY SUPPORT TO NEAREST EDGE OF HOLE

TABLE 1 JOIST DEPTH	JOIST SERIES	SQUARE OR RECTANGULAR HOLE SIZE 1 1/4"	2 1/4"	3 1/2"	4 3/4"	6"	7"	8 1/4"	9 1/2"	10 3/4"	12"
11 7/8"	TJI/L65	A	B	E	–	–	–	–	–	–	–
16"	TJI/L65	A	B	C	E	–	–	–	–	–	–

MINIMUM DISTANCE (d) FROM INSIDE FACE OF ANY SUPPORT TO NEAREST EDGE OF HOLE
*NOTE: RECTANGULAR HOLES BASED ON MEASUREMENT OF LONGEST SIDE.

NOTES:
1. IF MORE THAN ONE HOLE IS TO BE CUT IN THE WEB, THE LENGTH OF THE UNCUT WEB BETWEEN HOLES MUST BE TWICE THE LENGTH OF THE LONGEST DIMENSION OF THE LARGEST ADJACENT HOLE. HOLES MAY BE LOCATED VERTICALLY ANYWHERE WITHIN THE WEB.
2. TJI JOISTS ARE MANUFACTURED WITH 1 1/2" PERFORATED "KNOCKOUTS" IN THE WEB @ APPROXIMATELY 12"o.c. ALONG THE LENGTH OF THE JOIST.

NOTE: THIS INFORMATION IS TAKEN DIRECTLY FORM THE TRUS JOIST MACMILLAN CATALOG. ANY DISCREPANCIES BETWEEN THE DETAILS AND NOTES HEREIN AND INFORMATION OBTAINED BY THE CONTRACTOR SHALL BE BROUGHT TO THE ATTENTION OF THE ENGINEER PRIOR TO INSTALLATION.

TABLE 2 JOIST SPAN CENTER TO CENTER OF SUPPORT	HOLE FACTOR A	B	C	D	E
14'	1'-3"	2'-0"	2'-6"	3'-9"	5'-0"
16'	1'-3"	2'-3"	3'-3"	4'-6"	5'-9"
18'	1'-6"	3'-0"	4'-3"	5'-6"	6'-9"
20'	1'-9"	3'-0"	4'-3"	5'-6"	7'-0"
22'	2'-0"	3'-0"	4'-3"	5'-9"	7'-3"
24'	2'-3"	3'-3"	4'-6"	5'-9"	7'-6"
26'	2'-3"	3'-9"	4'-9"	6'-0"	7'-9"
28'	2'-6"	4'-0"	5'-3"	6'-6"	8'-0"
30'	2'-9"	4'-3"	5'-9"	7'-0"	8'-6"
32'	3'-0"	4'-6"	6'-0"	7'-6"	9'-3"
34'	3'-0"	5'-0"	6'-6"	8'-0"	9'-9"
36'	3'-3"	5'-0"	6'-9"	8'-6"	10'-3"

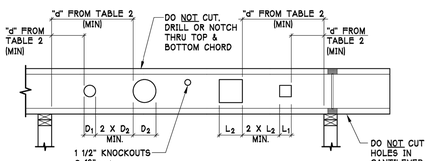

Q S2.2 HOLES IN "TJI" JOISTS 3/4" = 1'-0"

REVISIONS DATE	DESCRIPTION
04/10/23	CITY OF MERCER ISLAND CNF1

B&T DESIGN & ENGINEERING, INC.
250 E. SUNSET WAY
ISSAQUAH, WA 98027
(425) 557-9765 (VOICE)
(425) 557-9765 (FAX)

REGISTERED PROFESSIONAL ENGINEER STATE OF WASHINGTON TIMOTHY BERTRAM 25845 STRUCTURAL

MURRAY RESIDENCE
4603 FOREST AVE SE
MERCER ISLAND, WA 98040

PROJECT TITLE

STANDARD DETAILS

SHEET TITLE

PROJECT	18156
DATE	03/29/21
DRAWN	NH
CHKD.	TB

SHEET :

S2.2

OF

© 2021 B&T DESIGN & ENGINEERING, INC

04/10/23

18156-S2.1

WOOD STRUCTURAL PANEL SHEAR WALL SCHEDULE

TYPE	CAPACITY EQ / WIND [PLF]	SHEATHING	BLKG REQ'D	① NAILING #1a	② RIM JOIST/BLOCKING TO DBL. TOP PL	CONNECTION AT SILL	
						③ WOOD	④ CONCRETE
P-1	240 / 335	1/2" PLYWOOD ONE SIDE	YES #3	8d @ 6"o.c. EDGE, 12"o.c. FIELD	SIMPSON A35 @ 16"o.c.	16d @ 6"o.c.	1/2"ø AB @ 2'-6"o.c. #2
P-2	350 / 490	1/2" PLYWOOD ONE SIDE	YES #3	8d @ 4"o.c. EDGE, 12"o.c. FIELD	SIMPSON A35 @ 12"o.c.	(2) ROWS 16d @ #4 6"o.c. STAGGER 3"	1/2"ø AB @ 1'-8"o.c. #2
P-3	480 / 670	1/2" PLYWOOD BOTH SIDES	YES #3	8d @ 6"o.c. EDGE, 12"o.c. FIELD	SIMPSON A35 @ 8"o.c.	(2) ROWS 16d @ #4 3"o.c. STAGGER 1 1/2"	1/2"ø AB @ 1'-3"o.c. #2
P-4	700 / 980	1/2" PLYWOOD BOTH SIDES	YES #3	8d @ 4"o.c. EDGE #1b 12"o.c. FIELD	SIMPSON LS90 @ 12"o.c.	(2) ROWS 1/4"ø x 0'-4" LAG #4 SCREWS @ 8"o.c., STAGGER 4"	1/2"ø AB @ 0'-10"o.c. #2
P-5	980 / 1370	1/2" PLYWOOD BOTH SIDES	YES #3	8d @ 3"o.c. EDGE #1b 12"o.c. FIELD	SIMPSON LS90 @ 8"o.c.	(2) ROWS 1/4"ø x 0'-4" LAG #4 SCREWS @ 6"o.c., STAGGER 3"	1/2"ø AB @ 0'-6"o.c. #2

TYPICAL SHEAR WALL NOTES

1. WOOD STRUCTURAL PANEL SHEAR WALLS:
   a. 8d NAILS SHALL BE COMMON (2 1/2" X 0.113" DIAMETER) WITH 1 3/8" MINIMUM PENETRATION INTO FRAMING. NO. 14 GAGE STAPLES WITH A MINIMUM 7/16" OD CROWN AND 1 1/2" LENGTH MAY BE USED ONE FOR ONE IN LIEU OF 8d NAILS. FASTENERS EXPOSED TO WEATHER SHALL BE ZINC COATED BY HOT DIP GALVANIZING, MECHANICALLY DEPOSITED, OR ELECTRO DEPOSITED
   b. WHERE PLYWOOD IS APPLIED BOTH SIDES OF SHEAR WALL, PANEL JOINTS SHALL BE OFFSET TO FALL ON DIFFERENT FRAMING MEMBERS, OR FRAMING MEMBERS SHALL BE 3" WIDE (NOMINAL) AND NAILS ON EACH SIDE SHALL BE STAGGERED.
   c. FRAMING AT ADJOINING PANEL EDGES AND BOTTOM PLATES OF SHEAR WALLS SHALL BE 3-INCH NOMINAL OR WIDER AND NAILS SHALL BE STAGGERED WHERE THE REQUIRED SHEAR CAPACITY EXCEEDS 700 plf.
   d. ALLOWABLE SHEAR VALUES IN TABLE ABOVE ARE FOR HEM-FIR FRAMING MEMBERS (GROUP III) NO SUBSTITUTION OF LESSER GROUPS WILL BE ALLOWED.
2. PLATE WASHERS A MINIMUM OF 3 INCH X 3 INCH X 0.229 INCH THICK SHALL BE USED ON EACH ANCHOR BOLT. SEE DETAIL A/S2.3.
3. ALL BLOCKING SHALL BE 2X HEM-FIR STUD GRADE OR BETTER. (USE 3 X HF BLOCKING WHERE REQUIRED BY NOTE #1b. & 1c.)
4. PROVIDE DOUBLE BLOCKING OR RIM JOIST UNDER WOOD SILL WHERE (2) ROWS OF FASTENERS ARE REQUIRED. PROVIDE TRIPLE BLOCKING OR RIM JOIST UNDER WOOD SILL WHERE (3) ROWS OF FASTENERS ARE REQUIRED. (CLOSEST ALLOWABLE SPACING FOR 16d NAILS IN 1 1/4" "TIMBERSTRAND" LSL RIM IS 6"o.c.).
5. "ⓝ" INDICATES CONNECTION TYPE AS DESCRIBED IN SCHEDULE ABOVE – LOCATE PER DIAGRAM AT RIGHT.

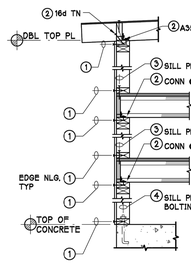

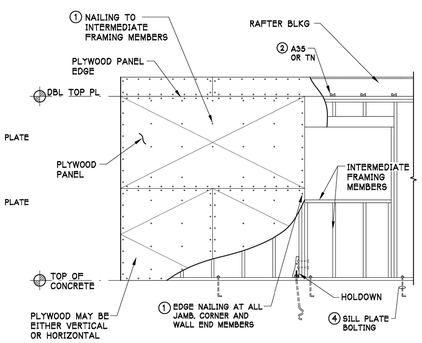

SHEAR WALL SYSTEMS:

1. PANELS SHALL NOT BE LESS THAN 4' X 8', EXCEPT AT BOUNDARIES AND CHANGES IN FRAMING. ALL EDGES OF ALL PANELS SHALL BE SUPPORTED BY AND FASTENED TO FRAMING MEMBERS OR BLOCKING.
2. NAILS SHALL BE LOCATED AT LEAST 3/8" FROM THE PANEL EDGES. MAXIMUM NAIL SPACING AT PANEL EDGES SHALL BE 6" ON CENTER.
3. NAILS ALONG INTERMEDIATE FRAMING MEMBERS SHALL BE THE SAME SIZE AS NAILS SPECIFIED FOR PANEL EDGE NAILING. AT INTERMEDIATE FRAMING MEMBERS, THE MAXIMUM NAIL SPACING SHALL BE 6" ON CENTER.
4. THE WIDTH OF THE NAILED FACE OF FRAMING MEMBERS AND BLOCKING SHALL BE 2" NOMINAL OR GREATER AT ADJOINING PANEL EDGES EXCEPT THAT A 3" NOMINAL OR GREATER WIDTH AT ADJOINING PANEL EDGES AND STAGGERED NAILING AT ALL PANEL EDGES ARE REQUIRED WHERE:
   a. NAIL SPACING OF 2" ON CENTER OR LESS AT ADJOINING PANEL EDGES IS SPECIFIED, OR
   b. 10d COMMON NAILS HAVING PENETRATION INTO FRAMING MEMBERS AND BLOCKING OF MORE THAN 1-1/2" ARE SPECIFIED AT 3" ON CENTER, OR LESS AT ADJOINING PANEL EDGES, OR
   c. REQUIRED NOMINAL UNIT SHEAR CAPACITY ON EITHER SIDE OF THE SHEAR WALL EXCEEDS 700 plf IN SEISMIC DESIGN CATEGORY D, E, OR F.
5. MAXIMUM STUD SPACING SHALL BE 24" ON CENTER.
6. WOOD STRUCTURAL PANELS SHALL CONFORM TO THE REQUIREMENTS FOR ITS TYPE IN DOC PS 1 OR PS 2.

SHEARWALL SCHEDULE

HOLDOWN SCHEDULE

MARK	SIMPSON DESIGNATION	CONNECTION REQUIREMENTS	
		l_e	FASTENERS
1	HDU2-SDS2.5	16 5/8"	(6) SDS 1/4 X 2 1/2 WOOD SCREWS INTO DOUBLE STUD
			SSTB20 ANCHOR BOLT INTO CONC.
2	HDU5-SDS2.5	20 5/8"	(14) SDS 1/4 X 2 1/2 WOOD SCREWS INTO DOUBLE STUD
			SSTB24 ANCHOR BOLT INTO CONC.
3	HHDQ11-SDS2.5	24 7/8"	(24) SDS 1/4 X 2 1/2 WOOD SCREWS INTO 6 X 6 POST
			1"ø ALLTHREAD INTO CONC.

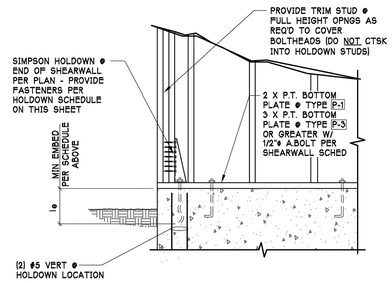

NOTE: IN LIEU OF SIMPSON SSTB ANCHOR BOLT @ HOLDOWN, CONTRACTOR MAY USE A36 ALLTHREAD W/ 3 X 3 X 1/4 PLATE & NUT ON EMBEDDED END - DIAMETER & LENGTH AS FOLLOWS.

HDU2 HOLDOWN:
USE 5/8"ø ALLTHREAD (16" MIN EMBED)

HDU5 HOLDOWN:
USE 5/8"ø ALLTHREAD (20" MIN EMBED)

HHDQ11 HOLDOWN:
USE 1"ø ALLTHREAD (24" MIN EMBED)

ⓑ **HOLDOWN DETAIL @ CONCRETE FOUNDATION**

B S2.3 **HOLDOWN SCHEDULE & DETAILS** 3/4"=1'-0"

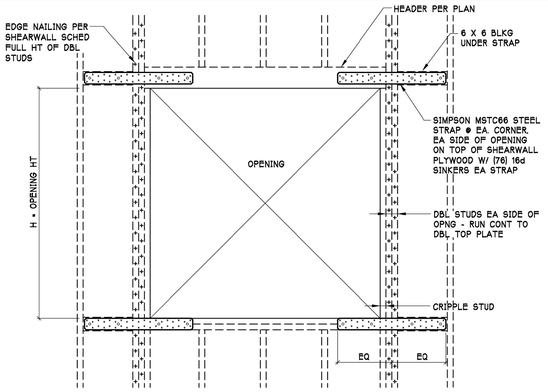

C S2.3 **PORTAL SHEARWALL** 1" = 1'-0"

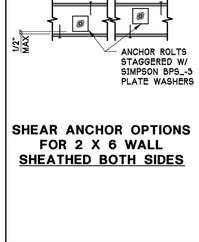

SHEAR ANCHOR OPTIONS FOR 2 X 6 WALL SHEATHED BOTH SIDES

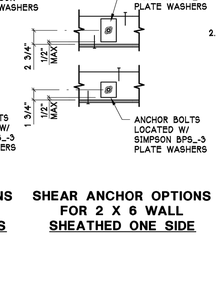

SHEAR ANCHOR OPTIONS FOR 2 X 6 WALL SHEATHED ONE SIDE

NOTES:

1. A PLATE WASHER MUST BE A MINIMUM OF 3" X 3" X 0.229" AND MUST EXTEND TO WITHIN 1/2" OF THE SHEATHED EDGE OF THE SILL PLATE. SLOTS ARE PERMITTED IN THE PLATE WASHER TO ALLOW FOR A TOLERANCE IN ANCHOR BOLT PLACEMENT.
2. THE 3" X 3" PLATE WASHER WORKS WELL W/ A 2 X 4 SILL PLATE BUT WHEN USED W/ A 2 X 6 SILL PLATE, IT REQUIRES THE ANCHOR BOLT TO BE OFFSET TOWARD THE SHEATHED EDGE. IF THE WALL IS SHEATHED ON BOTH SIDES, A STAGGERED BOLT PATTERN IS REQUIRED.

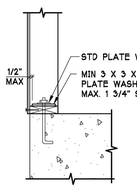

A S2.3 **SILL PLATE ANCHORAGE** 1" = 1'-0"

REVISIONS

DATE	DESCRIPTION
04/10/23	CITY OF MERCER ISLAND CNF#1

B&T DESIGN & ENGINEERING
B & T DESIGN & ENGINEERING, INC.
230 E. SUNSET WAY
ISSAQUAH, WA 98027
(425) 557-9765 (FAX)

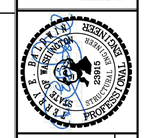

MURRAY RESIDENCE
4603 FOREST AVE SE
MERCER ISLAND, WA 98040
PROJECT TITLE

SHEARWALL SCHEDULE AND DETAILS
SHEET TITLE

PROJECT	18156
DATE	03/29/21
DRAWN	NH
CHKD.	TB

SHEET :

S2.3

OF

© 2021 B&T DESIGN & ENGINEERING, INC

18156-S2_1 04/10/23

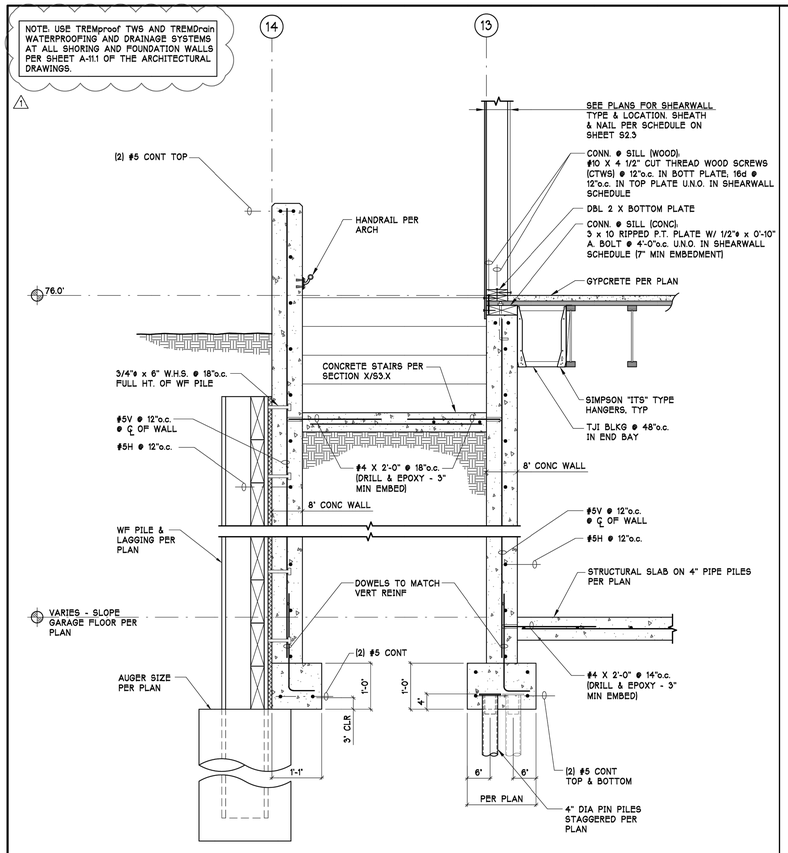

A S3.1 **SECTION** 3/4" = 1'-0"

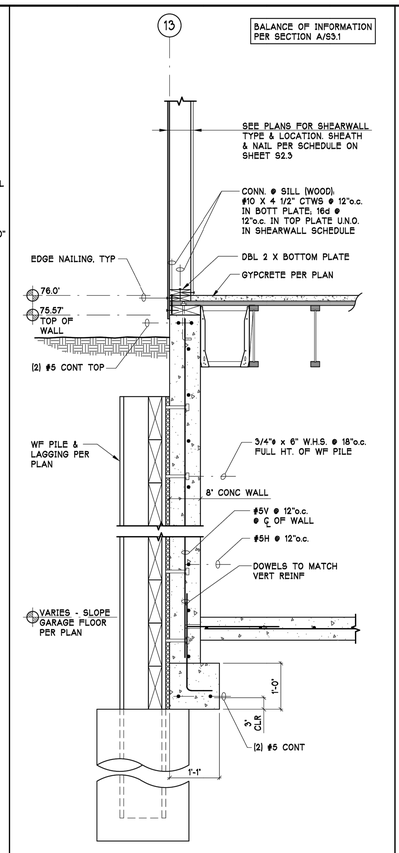

B S3.1 **SECTION** 3/4" = 1'-0"

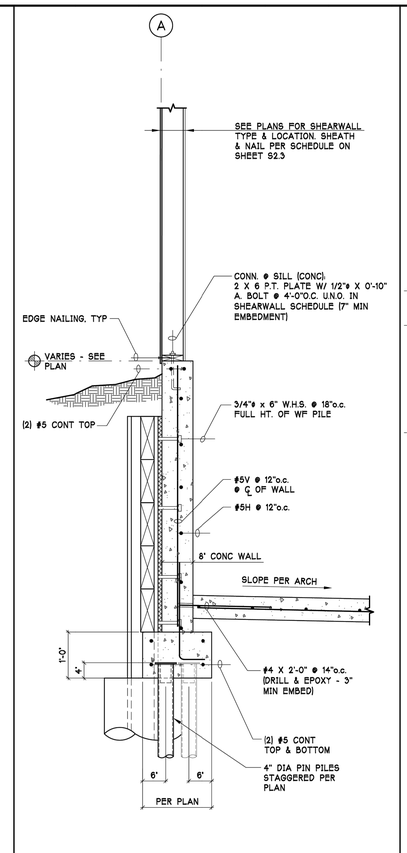

C S3.1 **SECTION** 3/4" = 1'-0"

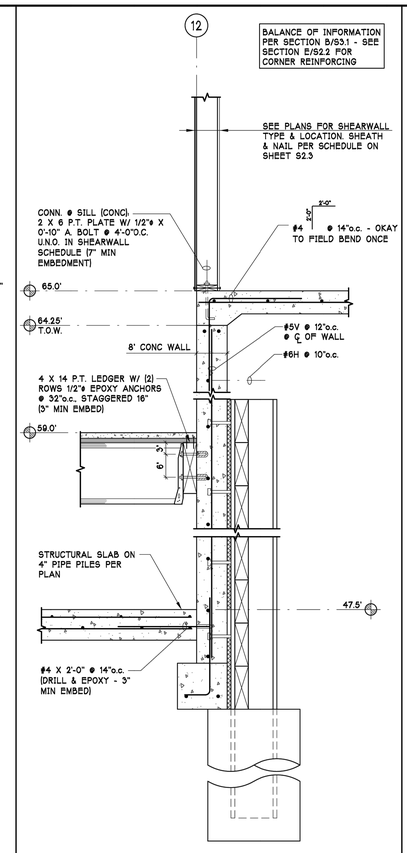

D S3.1 **SECTION** 3/4" = 1'-0"

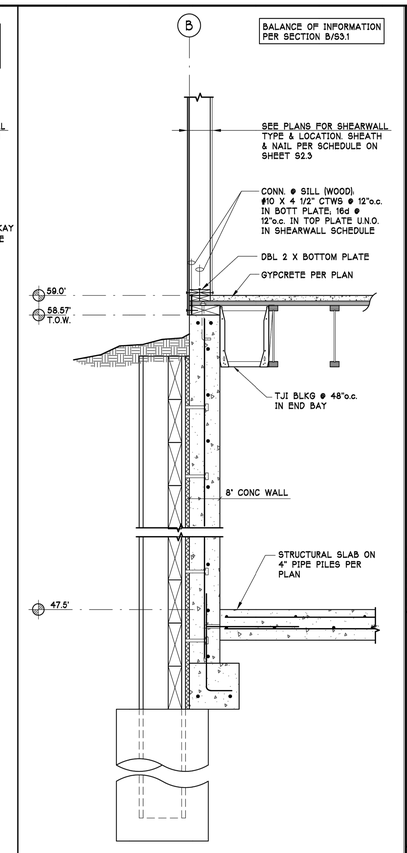

E S3.1 **SECTION** 3/4" = 1'-0"

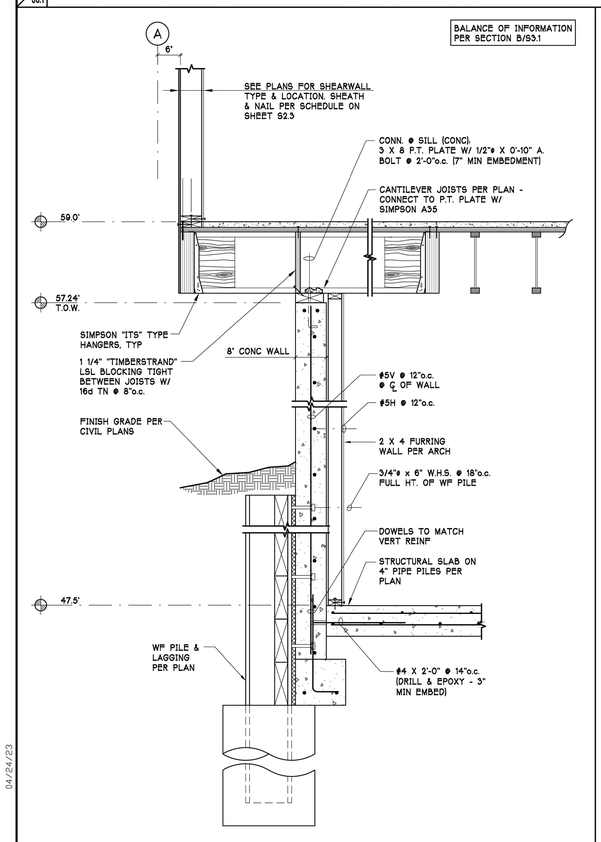

F S3.1 **SECTION** 3/4" = 1'-0"

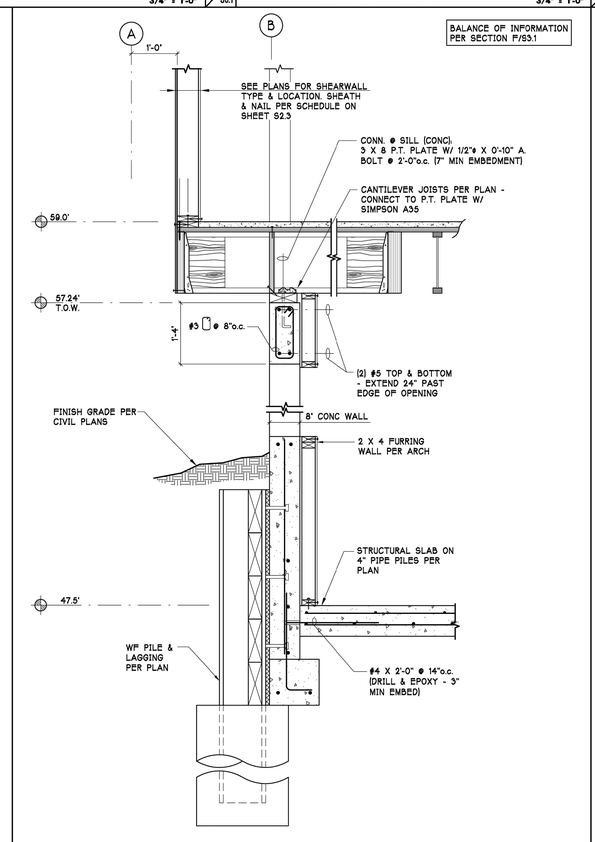

G S3.1 **SECTION** 3/4" = 1'-0"

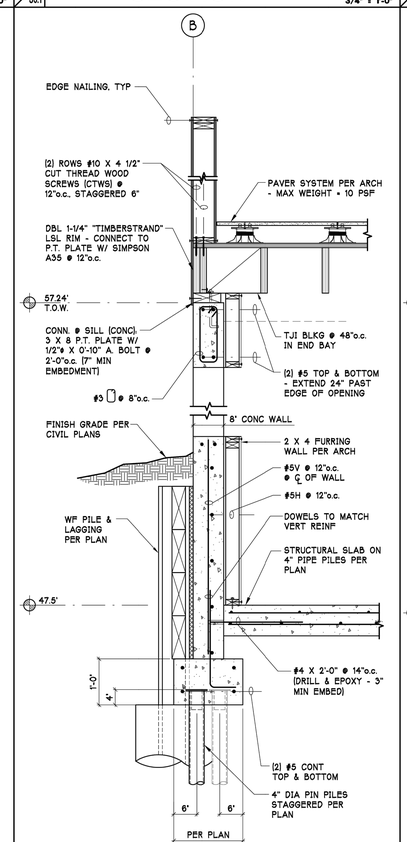

H S3.1 **SECTION** 3/4" = 1'-0"

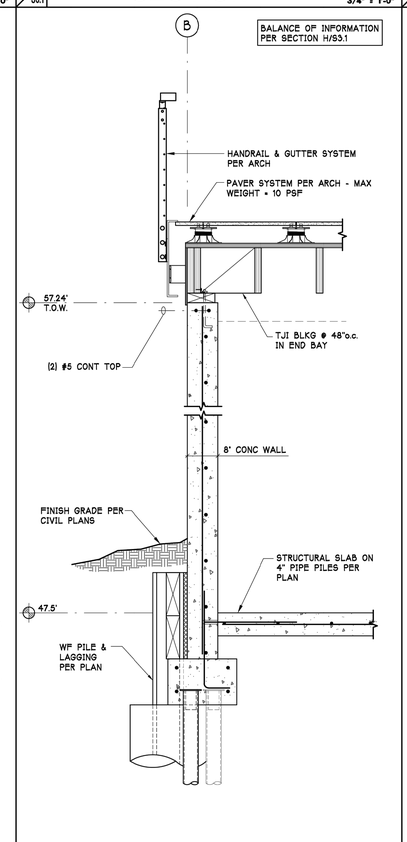

J S3.1 **SECTION** 3/4" = 1'-0"

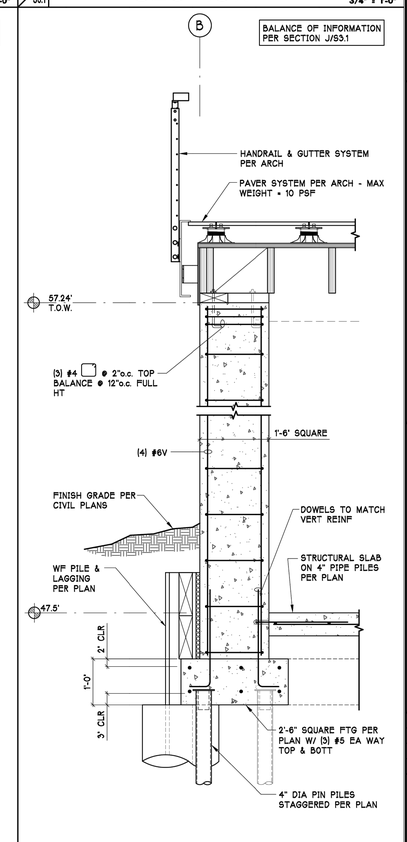

K S3.1 **SECTION** 3/4" = 1'-0"

04/24/23

18156-S3.1

REVISIONS

DATE	DESCRIPTION
04/10/23	CITY OF MERCER ISLAND CM#1

B&T DESIGN & ENGINEERING, INC.
230 E. SUNSET WAY
ISSAQUAH, WA 98027
(425) 557-9765 (FAX)
(425) 557-9765
B&T DESIGN & ENGINEERING

REGISTERED PROFESSIONAL ENGINEER STATE OF WASHINGTON BRYAN TOLLEFSON 22826 2 EXPIRES: 10/13/2021

MURRAY RESIDENCE
4603 FOREST AVE SE
MERCER ISLAND, WA 98040

PROJECT TITLE

FOUNDATION DETAILS

SHEET TITLE

PROJECT	18156
DATE	03/29/21
DRAWN	NH
CHKD.	TB

SHEET :

S3.1

OF

© 2021 B&T DESIGN & ENGINEERING, INC

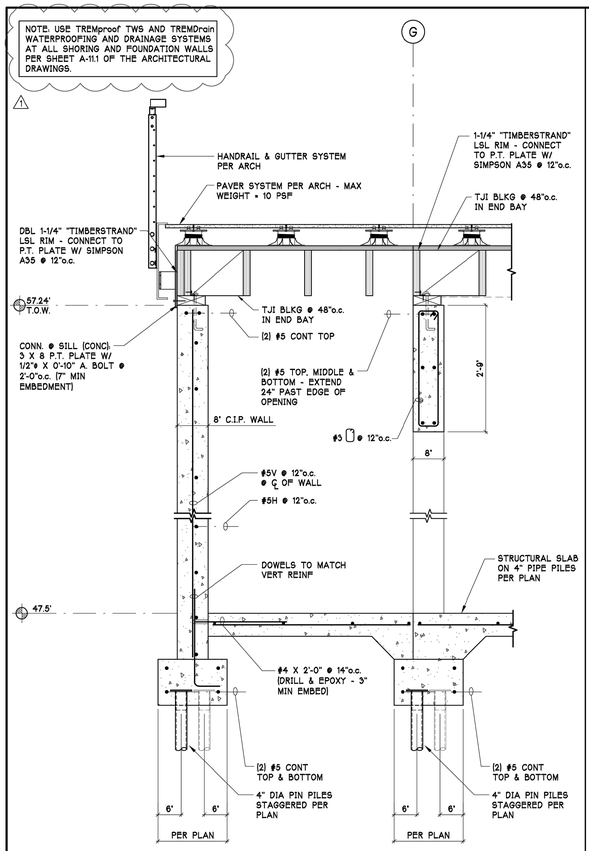

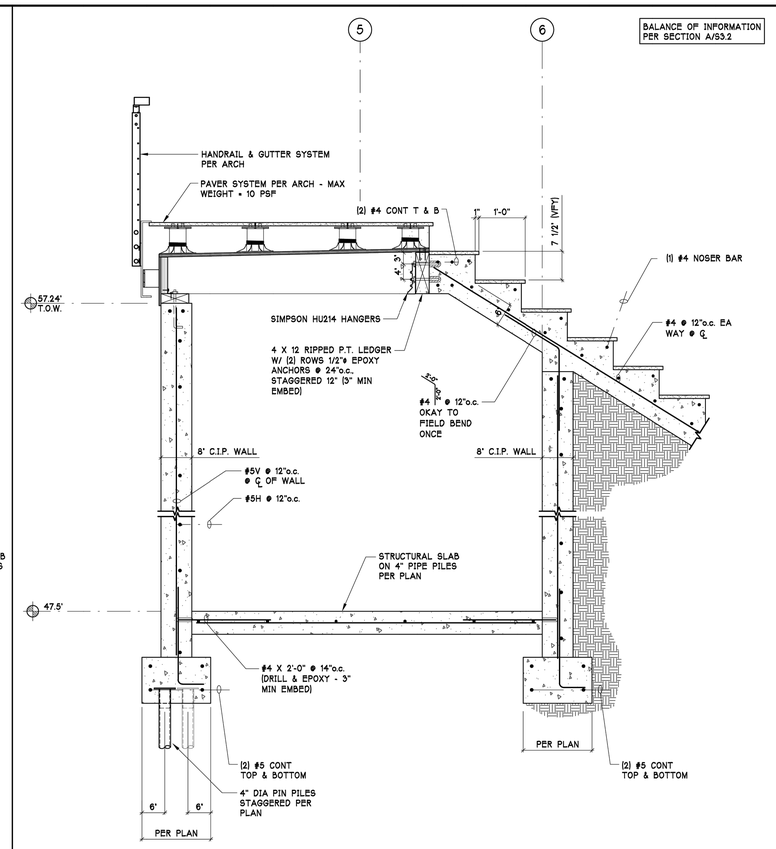

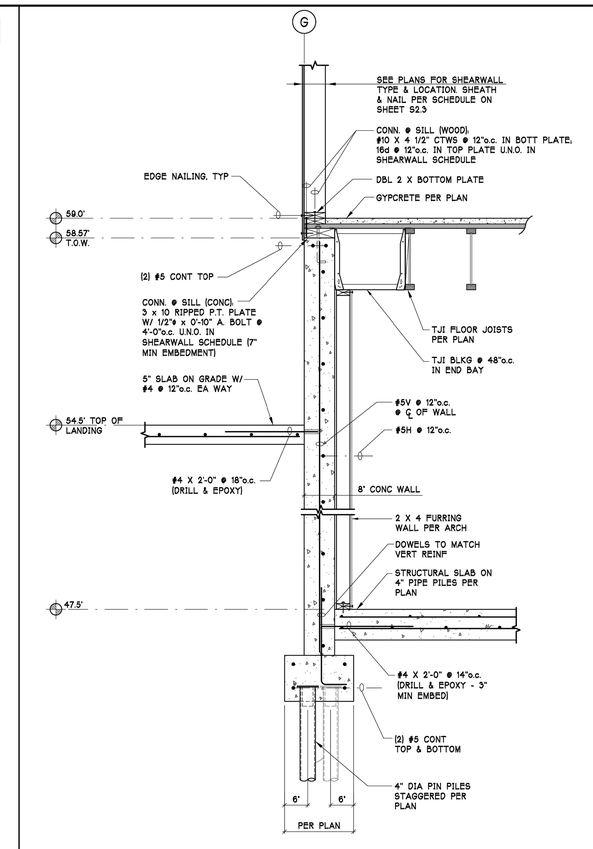

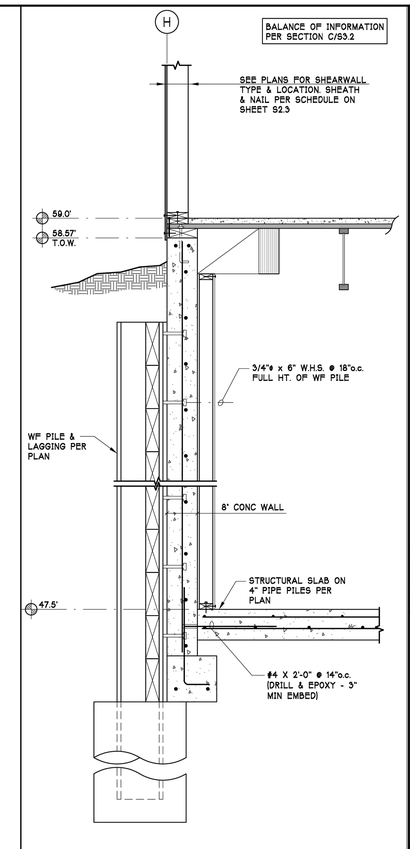

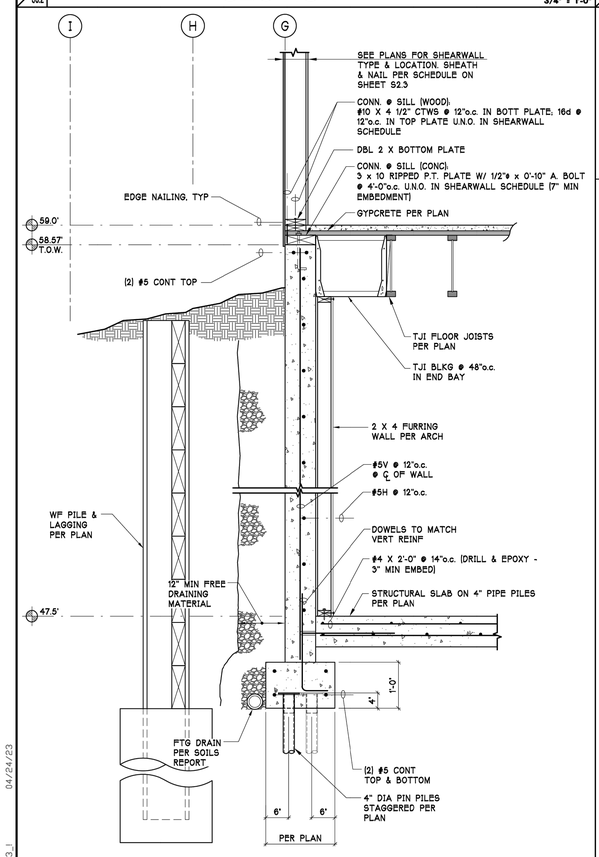

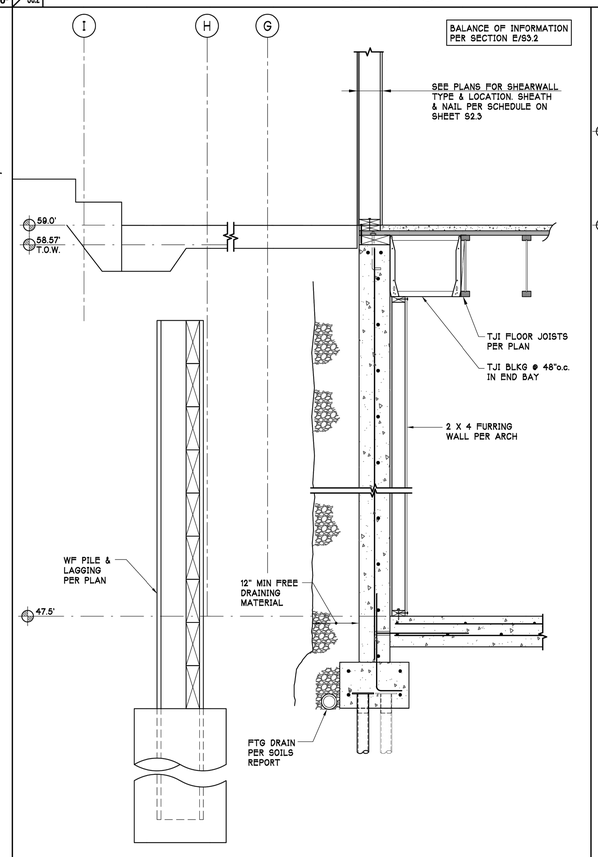

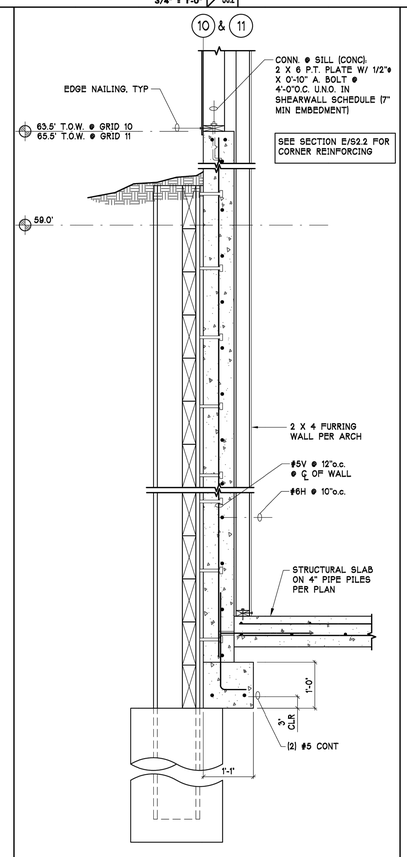

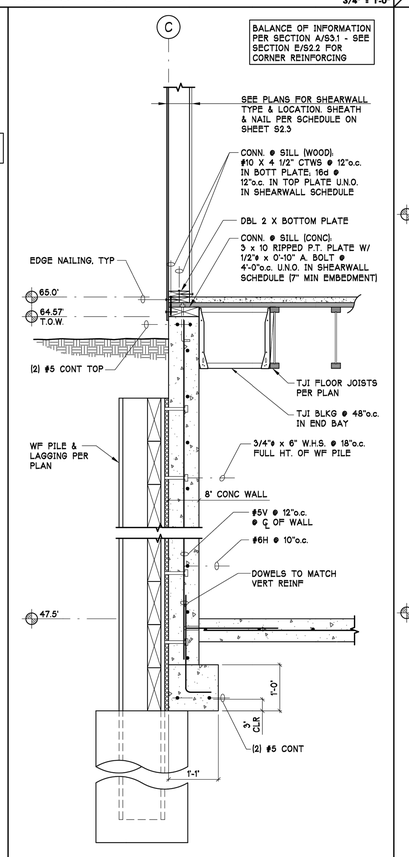

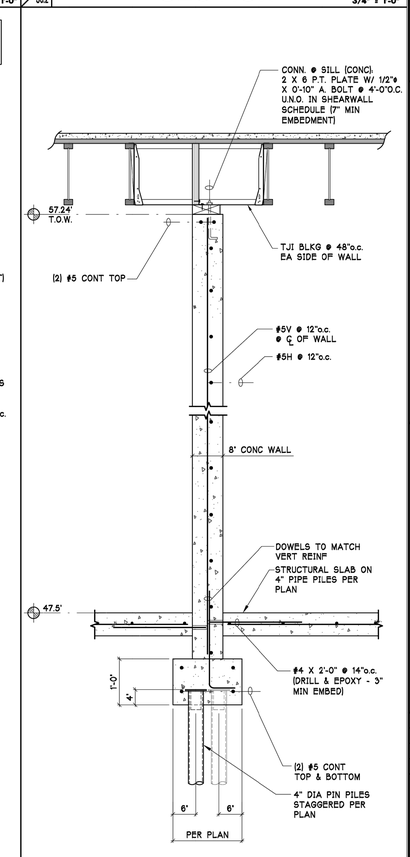

REVISIONS

DATE	DESCRIPTION
04/10/23	CITY OF MERCER ISLAND CMT

B&T DESIGN & ENGINEERING, INC.
230 E. SUNSET WAY
ISSAQUAH, WA 98027
(425) 557-9765 (FAX)
(425) 557-9765 (VOICE)
B&T DESIGN & ENGINEERING

REGISTERED PROFESSIONAL ENGINEER
STATE OF WASHINGTON
NATHAN H. TAYLOR
23632
TWO PROFESSIONAL ENGINEERS

MURRAY RESIDENCE
4603 FOREST AVE SE
MERCER ISLAND, WA 98040
PROJECT TITLE

FOUNDATION DETAILS
SHEET TITLE

PROJECT	18156
DATE	03/29/21
DRAWN	NH
CHKD.	TB

SHEET :
S3.2
OF

04/24/23
18156-S3.1

© 2021 B&T DESIGN & ENGINEERING, INC

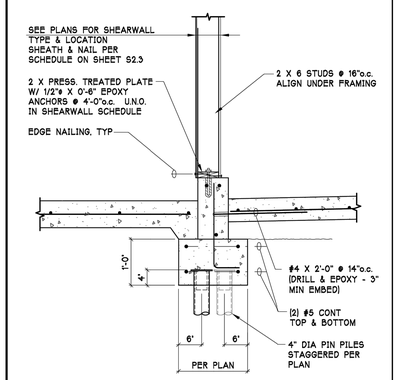

A S3.3 **SECTION** 3/4" = 1'-0"

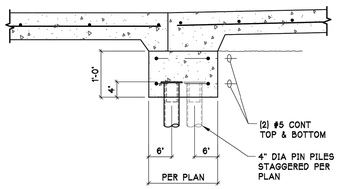

B S3.3 **SECTION** 3/4" = 1'-0"

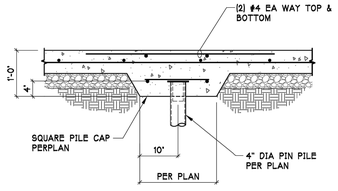

C S3.3 **SECTION** 3/4" = 1'-0"

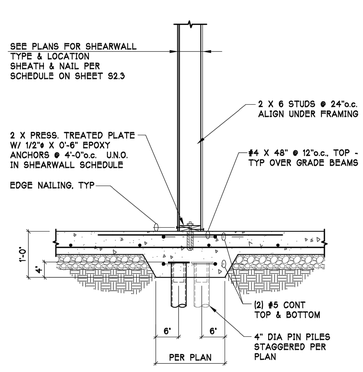

D S3.3 **SECTION** 3/4" = 1'-0"

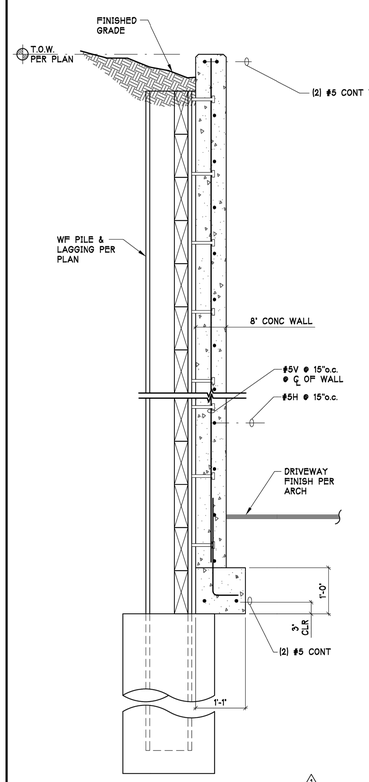

G S3.3 **SECTION** 3/4" = 1'-0"

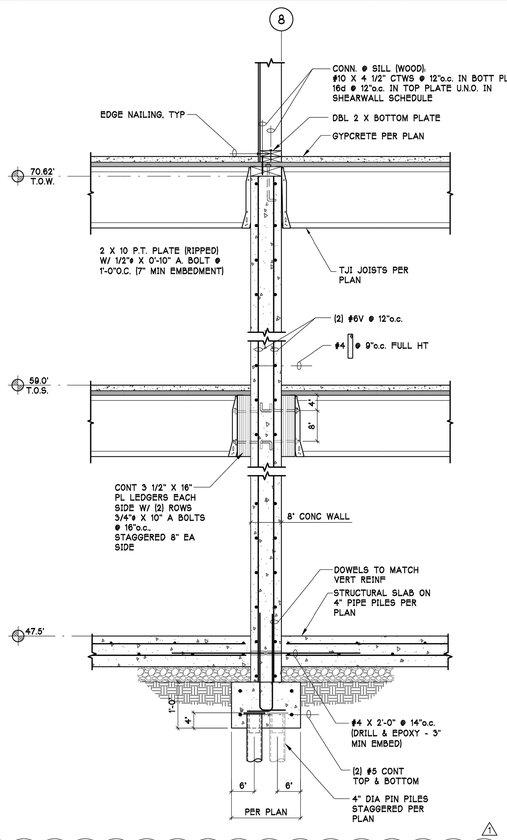

H S3.3 **SECTION** 3/4" = 1'-0"

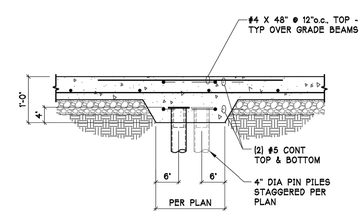

J S3.3 **SECTION** 3/4" = 1'-0"

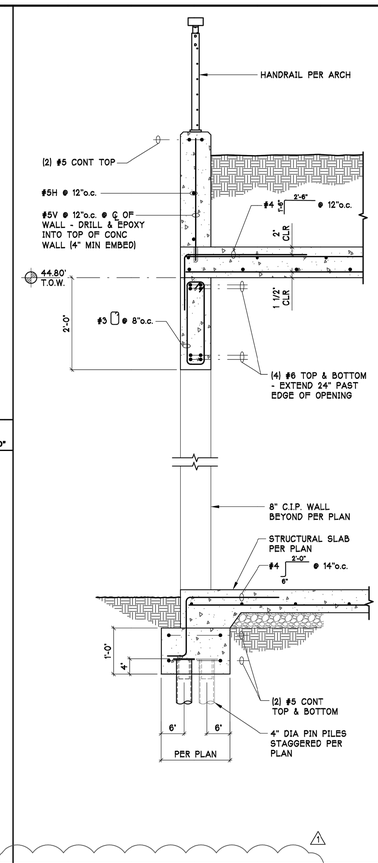

E S3.3 **SECTION** 3/4" = 1'-0"

NOTE: USE TREMproof TWS AND TREMDrain WATERPROOFING AND DRAINAGE SYSTEMS AT ALL SHORING AND FOUNDATION WALLS PER SHEET A-11.1 OF THE ARCHITECTURAL DRAWINGS.

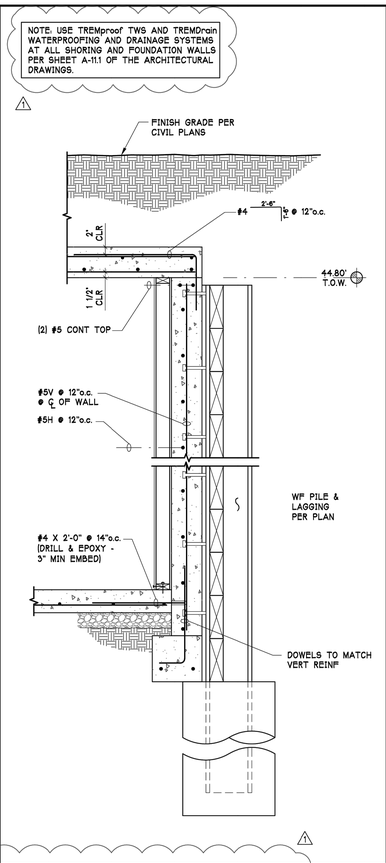

F S3.3 **SECTION** 3/4" = 1'-0"

REVISIONS		
DATE	DESCRIPTION	
04/10/23	CITY OF MERCER ISLAND CMF	1

B&T DESIGN & ENGINEERING, INC.
230 E. SUNSET WAY
ISSAQUAH, WA 98027
(425) 557-0765 (FAX)
DESIGN & ENGINEERING

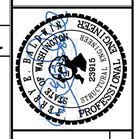

MURRAY RESIDENCE
4603 FOREST AVE SE
MERCER ISLAND, WA 98040

PROJECT TITLE

FOUNDATION DETAILS

SHEET TITLE

PROJECT	18156
DATE	03/29/21
DRAWN	NH
CHKD.	TB

SHEET :

S3.3

OF

© 2021 B&T DESIGN & ENGINEERING, INC

18156-S3.3 04/24/23

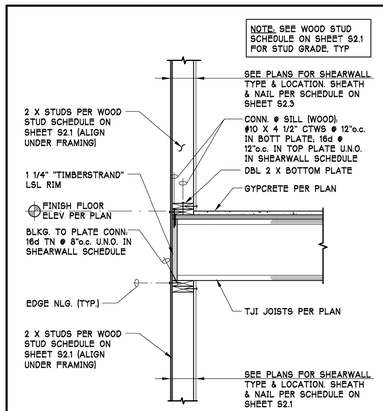

A S4.1 **SECTION** 3/4" = 1'-0"

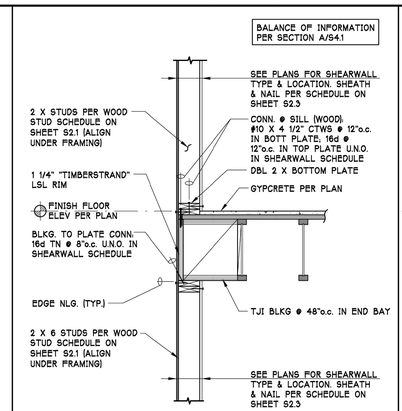

B S4.1 **SECTION** 3/4" = 1'-0"

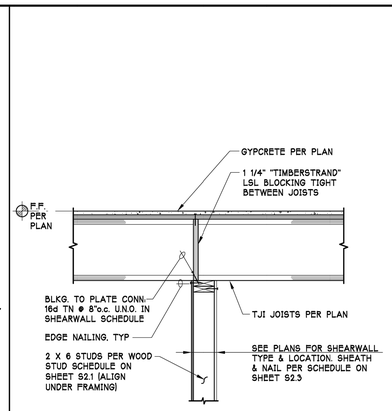

C S4.1 **SECTION** 3/4" = 1'-0"

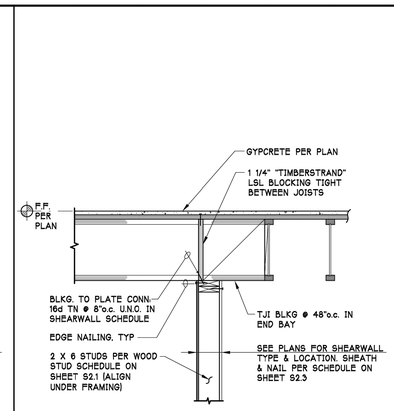

D S4.1 **SECTION** 3/4" = 1'-0"

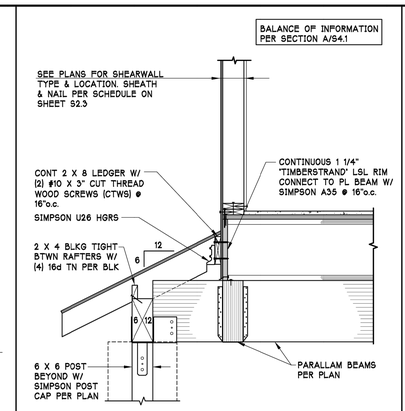

E S4.1 **SECTION** 3/4" = 1'-0"

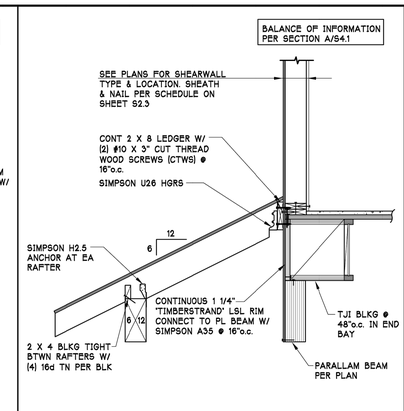

F S4.1 **SECTION** 3/4" = 1'-0"

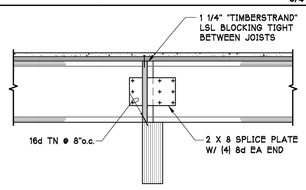

G S4.1 **SECTION** 3/4" = 1'-0"

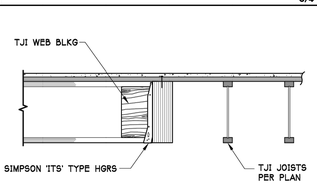

J S4.1 **SECTION** 3/4" = 1'-0"

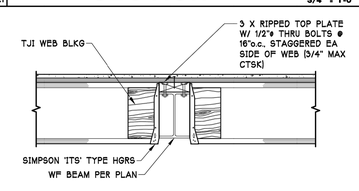

L S4.1 **SECTION** 3/4" = 1'-0"

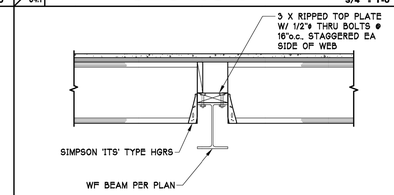

N S4.1 **SECTION** 3/4" = 1'-0"

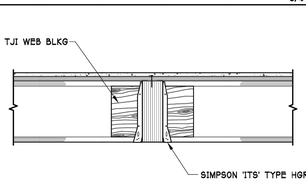

H S4.1 **SECTION** 3/4" = 1'-0"

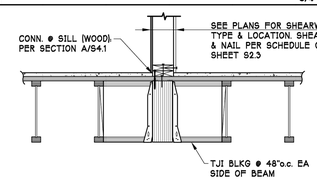

K S4.1 **SECTION** 3/4" = 1'-0"

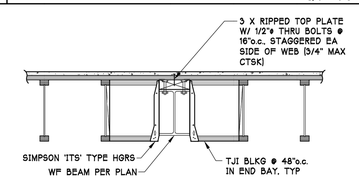

M S4.1 **SECTION** 3/4" = 1'-0"

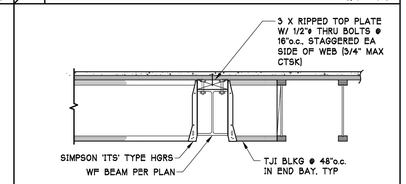

P S4.1 **SECTION** 3/4" = 1'-0"

REVISIONS

DATE	DESCRIPTION
04/10/23	CITY OF MERCER ISLAND CMI#1

B&T DESIGN & ENGINEERING
B & T DESIGN & ENGINEERING, INC.
230 E. SUNSET WAY
ISSAQUAH, WA 98027
(425) 557-9765 (VOICE)
(425) 557-9765 (FAX)

MURRAY RESIDENCE
4603 FOREST AVE SE
MERCER ISLAND, WA 98040
PROJECT TITLE

FLOOR
FRAMING DETAILS
SHEET TITLE

PROJECT	18156
DATE	03/29/21
DRAWN	NH
CHKD.	TB

SHEET :
S4.1
OF

© 2021 B&T DESIGN & ENGINEERING, INC

04/10/23
18156-S4.1

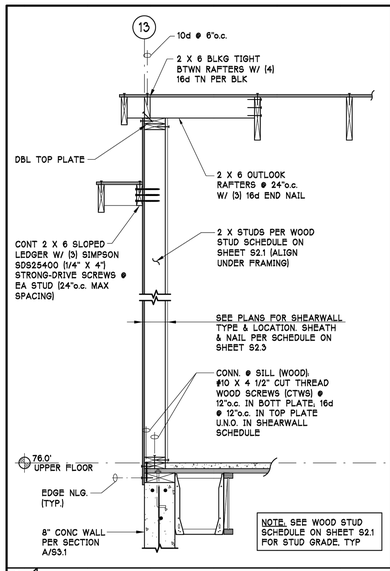

A S5.1 **SECTION** 3/4" = 1'-0"

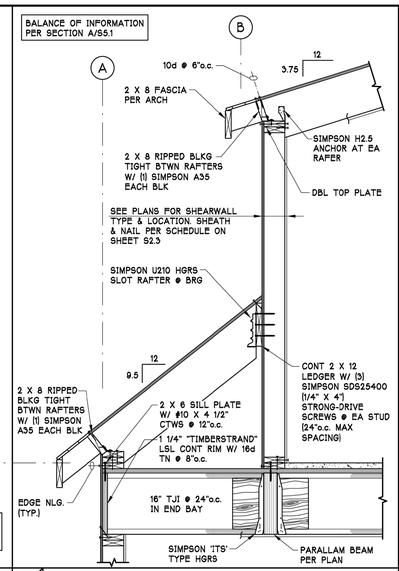

B S5.1 **SECTION** 3/4" = 1'-0"

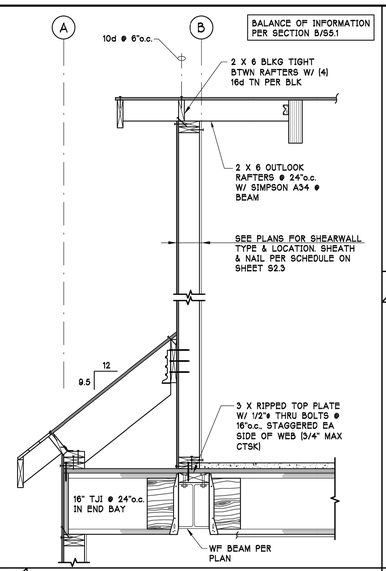

C S5.1 **SECTION** 3/4" = 1'-0"

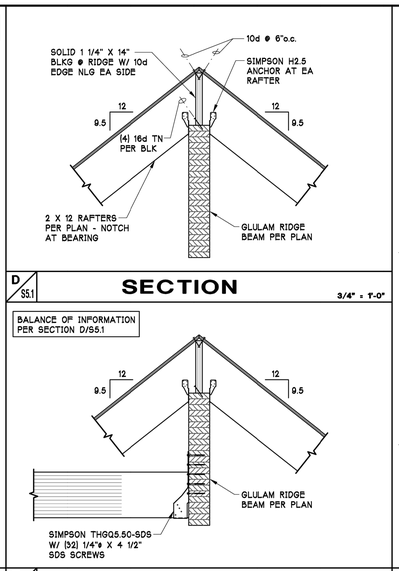

D S5.1 **SECTION** 3/4" = 1'-0"

E S5.1 **SECTION** 3/4" = 1'-0"

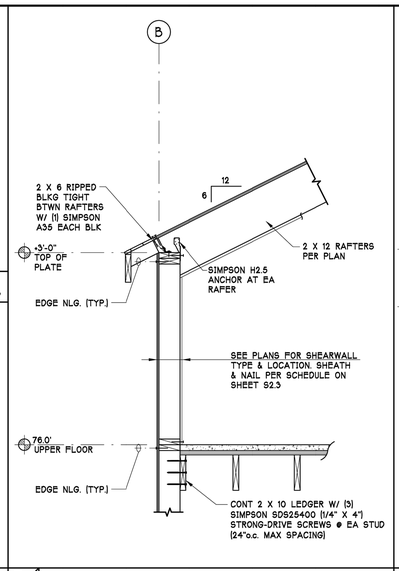

F S5.1 **SECTION** 3/4" = 1'-0"

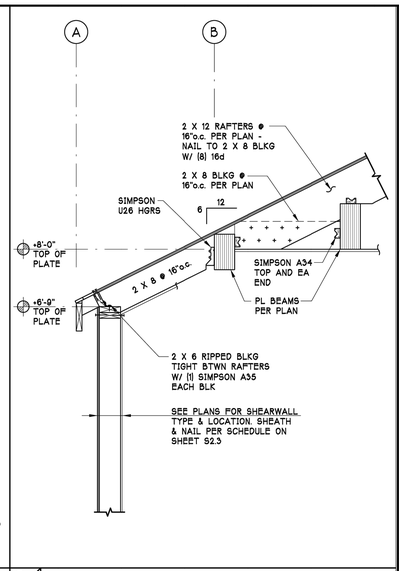

G S5.1 **SECTION** 3/4" = 1'-0"

H S5.1 **SECTION** 3/4" = 1'-0"

J S5.1 **SECTION** 3/4" = 1'-0"

K S5.1 **SECTION** 3/4" = 1'-0"

L S5.1 **SECTION** 3/4" = 1'-0"

M S5.1 **SECTION** 3/4" = 1'-0"

N S5.1 **SECTION** 3/4" = 1'-0"

P S5.1 **SECTION** 3/4" = 1'-0"

Q S5.1 **SECTION** 3/4" = 1'-0"

R S5.1 **SECTION** 3/4" = 1'-0"

T S5.1 **SECTION** 3/4" = 1'-0"

U S5.1 **SECTION** 3/4" = 1'-0"

V S5.1 **SECTION** 3/4" = 1'-0"

REVISIONS

DATE	DESCRIPTION
04/10/23	CITY OF MERCER ISLAND CMI#

B&T DESIGN & ENGINEERING, INC.
25611 SUNSET WAY
ISSAQUAH, WA 98027
(425) 557-9765 (FAX)

B&T DESIGN & ENGINEERING

MURRAY RESIDENCE
4603 FOREST AVE SE
MERCER ISLAND, WA 98040
PROJECT TITLE

ROOF
FRAMING DETAILS
SHEET TITLE

PROJECT	18156
DATE	03/29/21
DRAWN	NH
CHKD.	TB

SHEET :

S5.1

OF

04/10/23

18156-S5_1

© 2021 B&T DESIGN & ENGINEERING, INC

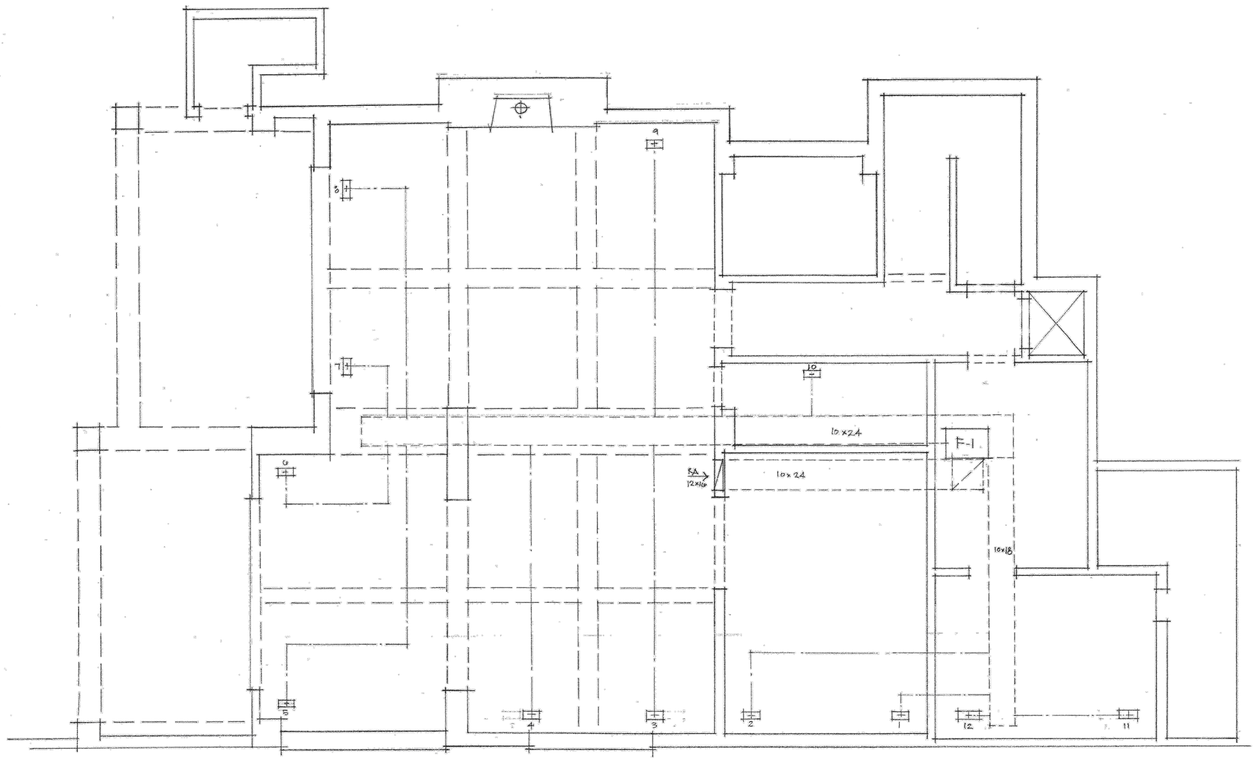

BASEMENT - MECHANICAL

RF ARCHITECTURE
PH: (253) 359-4039
RICHARD@RFARCHITECTURE.COM
7421 214TH AVE E BONNEYLAKE, WA 98391

6080

REGISTERED ARCHITECT
RICHARD W. FLAKE
STATE OF WASHINGTON

All drawings, specifications, plans, ideas, arrangements, and designs represented or referred to are the property of and owned by Richard Flake Architect in whether the project for which they are made is executed or not. They were created, evolved, developed and produced for sole use on and in connection with this project and none of the above may be disclosed or given to or used by any person, firm, or corporation for any use or purpose whatsoever including any other project, except upon written permission of Richard Flake Architect.

Copyright 2023
Richard Flake Architect

MURRAY RESIDENCE
NEW SINGLE FAMILY RESIDENCE
4805 MERCER ISLAND, WA 98040

DESIGN:
RWF

DRAWN:
HAVILAND CONSULTING

CHECKED:
RWF

REVISIONS:

PER CITY REVIEW
10.23.2023
REVISIONS

PER CITY REVIEW
8.8.2023
REVISIONS

September 15, 2023

M-2.1

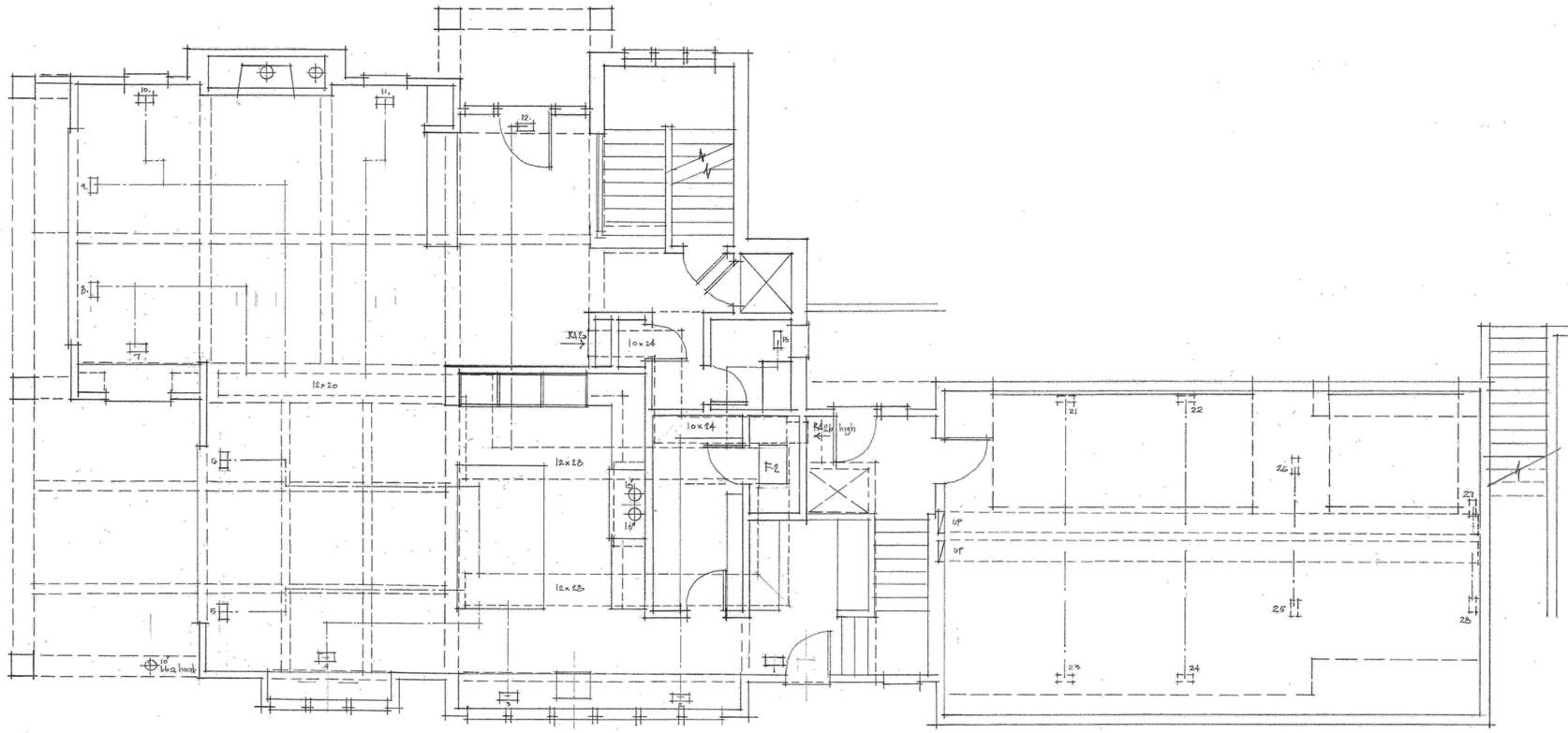

MAIN FLR - MECHANICAL

RF ARCHITECTURE
PH: (253) 359-4039
RICHARD@RFARCHITECTURE.COM
7421 214TH AVE E BONNEYLAKE, WA 98391

6080
REGISTERED ARCHITECT
RICHARD W. FLAKE
STATE OF WASHINGTON

All drawings, specifications, plans, ideas, arrangements, and designs represented or referred to are the property of and owned by Richard Flake Architect in whether the project for which they are made is executed or not. They were created, evolved, developed and produced for sole use on and in connection with this project and none of the above may be disclosed or given to or used by any person, firm, or corporation for any use or purpose whatsoever including any other project, except upon written permission of Richard Flake Architect.

Copyright 2023
Richard Flake Architect

MURRAY RESIDENCE

NEW SINGLE FAMILY RESIDENCE
MERCER ISLAND, WA
4 8 0 4 0 A V E S E

DESIGN:
RWF

DRAWN:
HAVILAND CONSULTING

CHECKED:
RWF

REVISIONS:

PER CITY REVIEW
10.23.2023
REVISIONS

PER CITY REVIEW
8.8.2023
REVISIONS

September 15, 2023

M-3.1

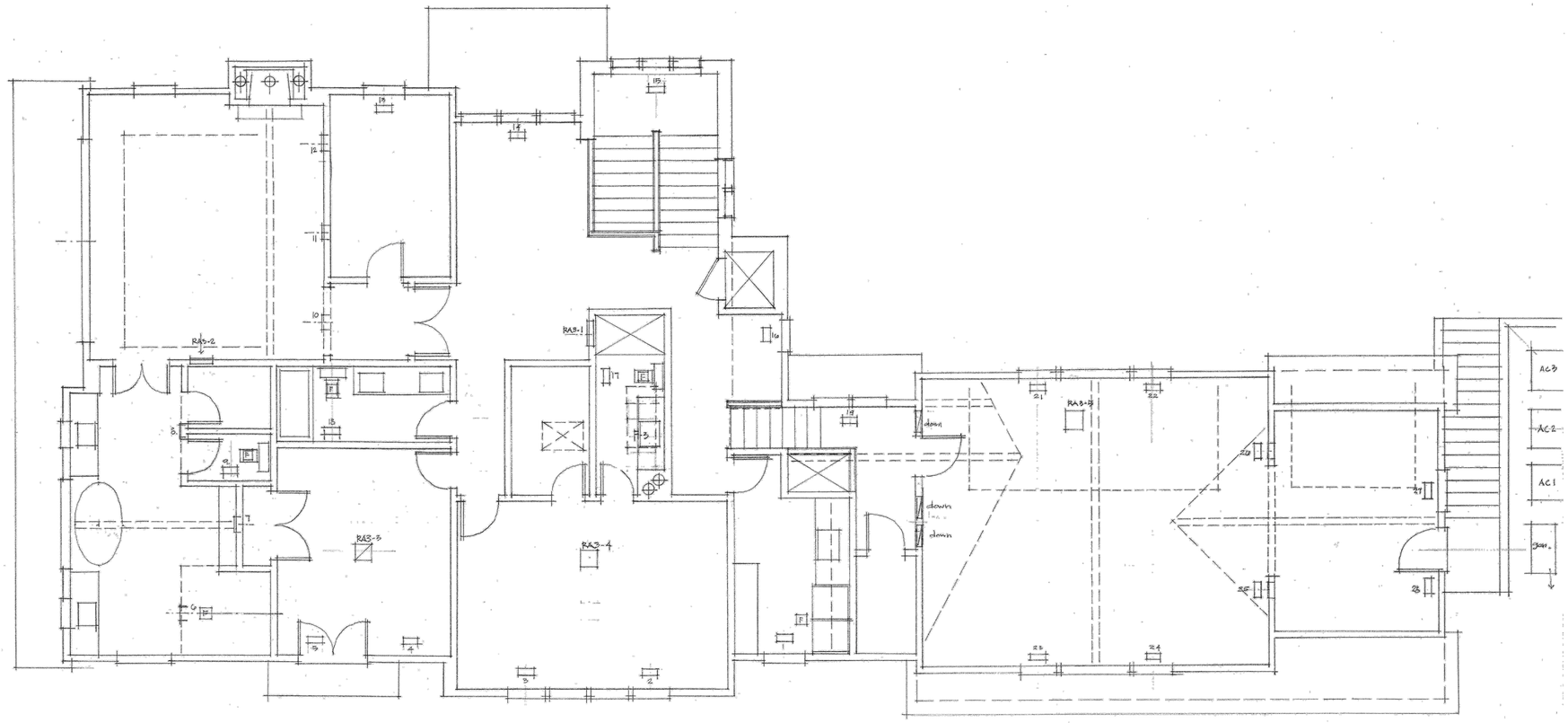

UPPER FLR - MECHANICAL

RF ARCHITECTURE
PH: (253) 359-4039
RICHARD@RFARCHITECTURE.COM
7421 214TH AVE E BONNEYLAKE, WA 98391

6080 REGISTERED ARCHITECT RICHARD W. FLAKE STATE OF WASHINGTON

All drawings, specifications, plans, ideas, arrangements, and designs represented or referred to are the property of and owned by Richard Flake Architect in whether the project for which they are made is executed or not. They were created, evolved, developed and produced for sole use on and in connection with this project and none of the above may be disclosed or given to or used by any person, firm, or corporation for any use or purpose whatsoever including any other project, except upon written permission of Richard Flake Architect.

Copyright 2023
Richard Flake Architect

MURRAY RESIDENCE

NEW SINGLE FAMILY RESIDENCE
4806 FOREST ISLAND DR.
MERCER ISLAND, WA 98040

DESIGN:
RWF

DRAWN:
HAVILAND CONSULTING

CHECKED:
RWF

REVISIONS:

PER CITY REVIEW
10-22-2021
REVISIONS

PER CITY REVIEW
8-8-2023
REVISIONS

September 15, 2023

M-4.1

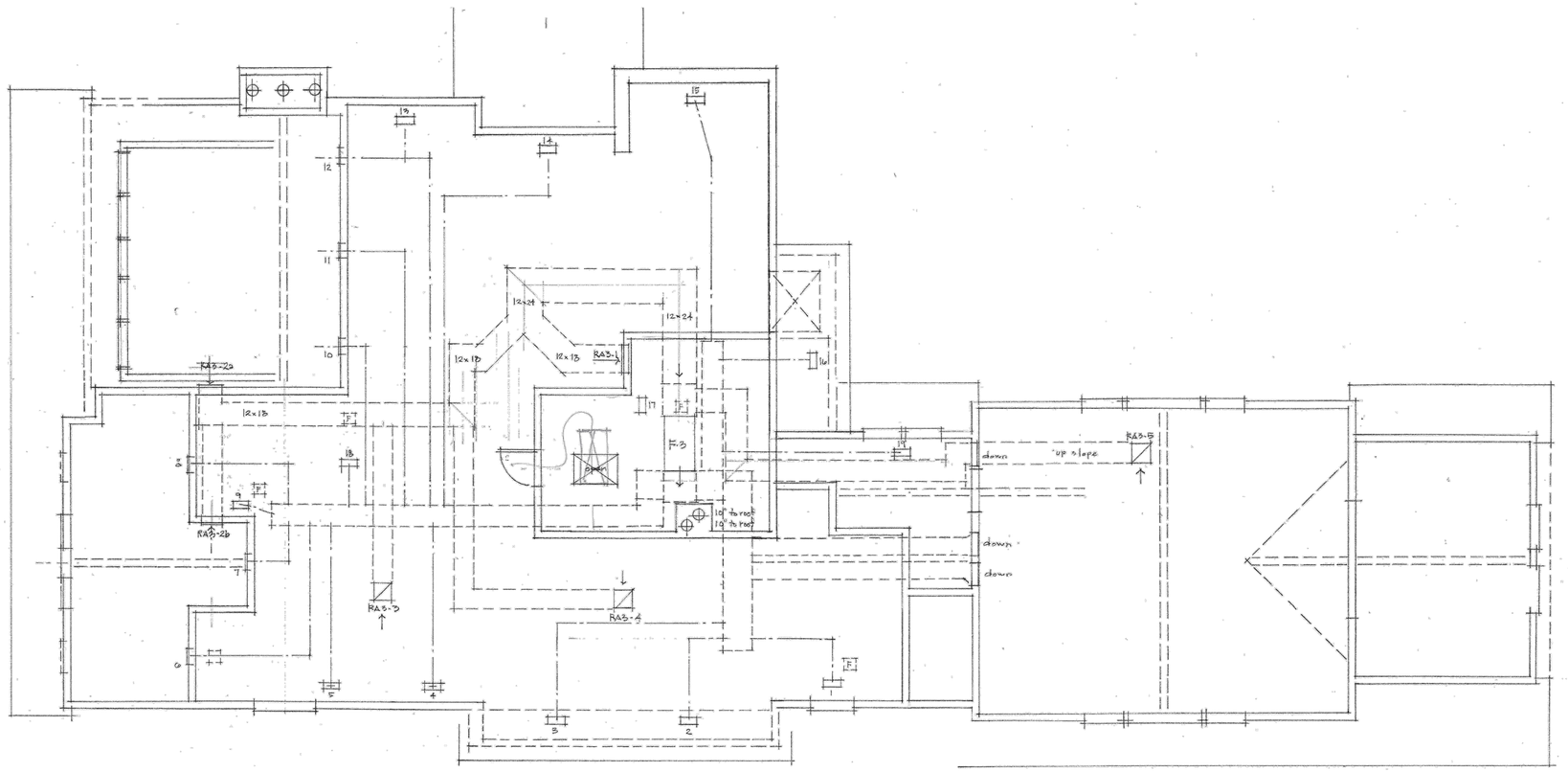

ATTIC - MECHANICAL

RF ARCHITECTURE
PH: (253) 359-4039
RICHARD@RFARCHITECTURE.COM
7421 214TH AVE E BONNEYLAKE, WA 98391

6080
REGISTERED ARCHITECT
RICHARD W. FLAKE
STATE OF WASHINGTON

All drawings, specifications, plans, ideas, arrangements, and designs represented or referred to are the property of and owned by Richard Flake Architect in whether the project for which they are made is executed or not. They were created, evolved, developed and produced for sole use on and in connection with this project and none of the above may be disclosed or given to or used by any person, firm, or corporation for any use or purpose whatsoever including any other project, except upon written permission of Richard Flake Architect.

Copyright 2023
Richard Flake Architect

MURRAY RESIDENCE
NEW SINGLE FAMILY RESIDENCE
4803 FORESTY AVE SE
MERCER ISLAND, WA 98040

DESIGN:
RWF

DRAWN:
HAVILAND CONSULTING

CHECKED:
RWF

REVISIONS:

1 PER CITY REVIEW
10-22-2021
REVISIONS

2 PER CITY REVIEW
8-8-2023
REVISIONS

September 15, 2023

M-5.I

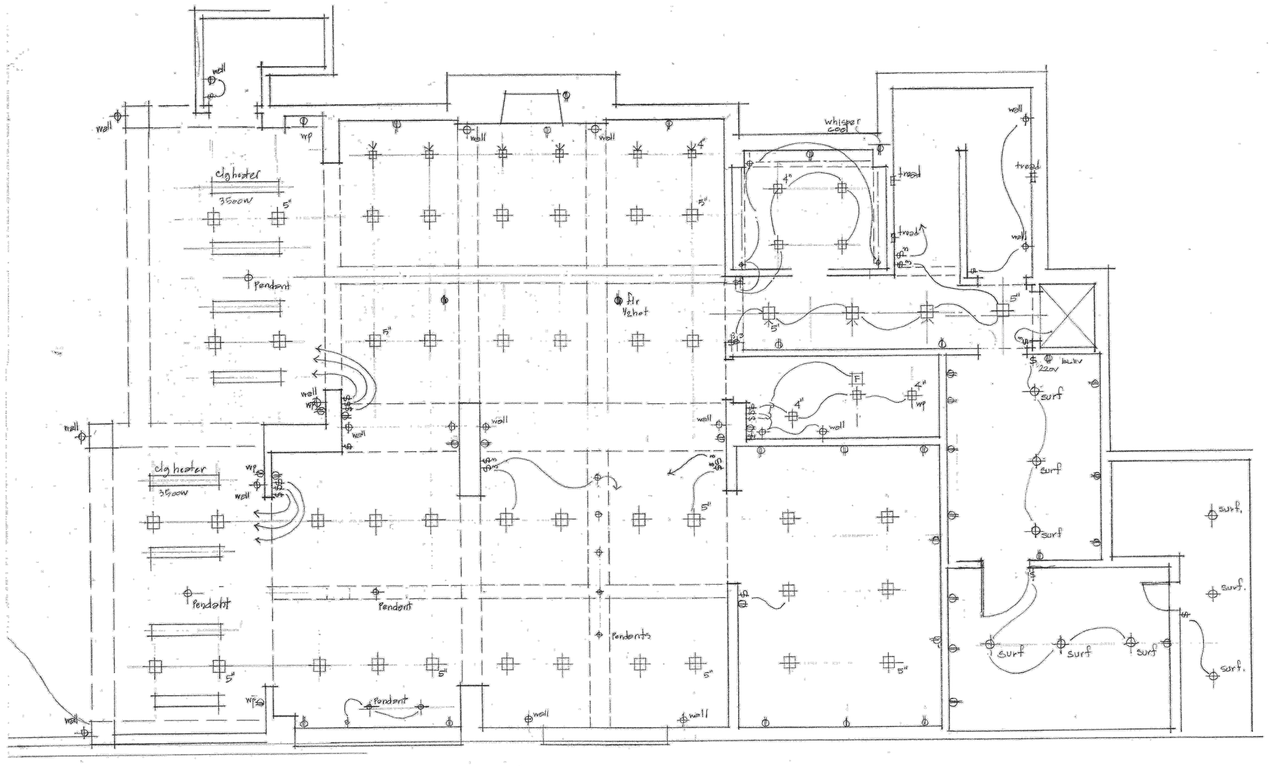

BASEMENT - LIGHTING & ELEC

RF ARCHITECTURE
PH: (253) 359-4039
RICHARD@RFARCHITECTURE.COM
7421 214TH AVE E BONNEYLAKE, WA 98391

6080
REGISTERED ARCHITECT
RICHARD W. FLAKE
STATE OF WASHINGTON

All drawings, specifications, plans, ideas, arrangements, and designs represented or referred to are the property of and owned by Richard Flake Architect no whether the project for which they are made is executed or not. They were created, evolved, developed and produced for sole use on and in connection with this project and none of the above may be disclosed or given to or used by any person, firm, or corporation for any use or purpose whatsoever including any other project, except upon written permission of Richard Flake Architect.

Copyright 2023
Richard Flake Architect

MURRAY RESIDENCE
NEW SINGLE FAMILY RESIDENCE
MERCER ISLAND, WA 98040

DESIGN:
RWF
DRAWN:
HAVILAND CONSULTING
CHECKED:
RWF
REVISIONS:
PER CITY REVIEW
10.22.2021
REVISIONS
PER CITY REVIEW
8.8.2023
REVISIONS

September 15, 2023

E-3.1

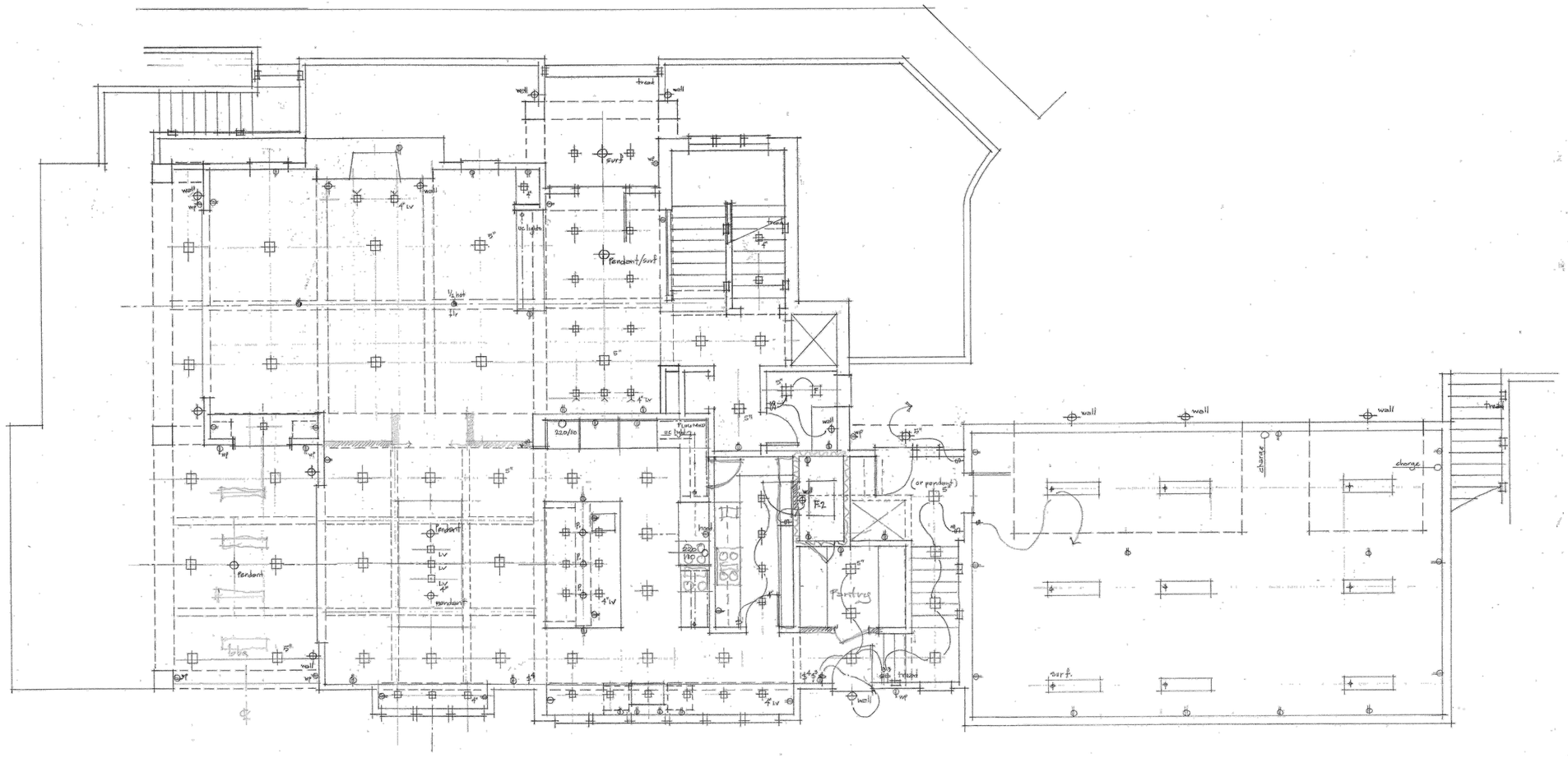

MAIN FLR - LIGHTING & ELEC

RF ARCHITECTURE
PH: (253) 359-4039
RICHARD@RFARCHITECTURE.COM
7421 214TH AVE E BONNEYLAKE, WA 98391

6080
REGISTERED ARCHITECT
RICHARD W. FLAKE
STATE OF WASHINGTON

All drawings, specifications, plans, ideas, arrangements, and designs represented or referred to are the property of and owned by Richard Flake Architect in whether the project for which they are made is executed or not. They were created, evolved, developed and produced for sole use on and in connection with this project and none of the above may be disclosed or given to or used by any person, firm, or corporation for any use or purpose whatsoever including any other project, except upon written permission of Richard Flake Architect.

Copyright 2023
Richard Flake Architect

MURRAY RESIDENCE

NEW SINGLE FAMILY RESIDENCE
8405 MERCER ISLAND WAY SE
MERCER ISLAND, WA 98040

DESIGN:
RWF

DRAWN:
HAVILAND CONSULTING

CHECKED:
RWF

REVISIONS:

PER CITY REVIEW
10.22.2021
REVISIONS

PER CITY REVIEW
8.8.2023
REVISIONS

September 15, 2023

E-4.1

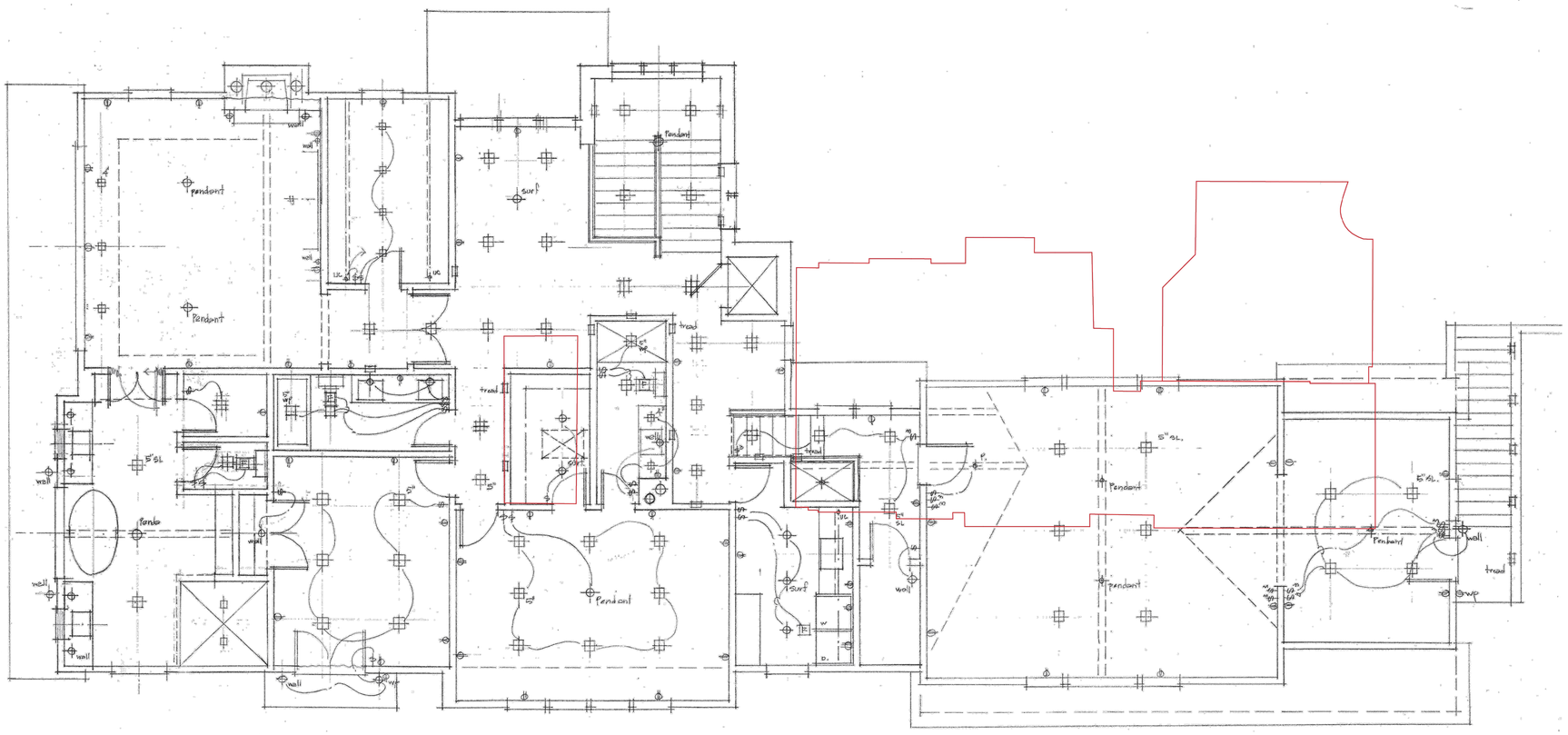
Pendant
Pendant
Pendant
Pendant
Pendant
Pendant
Pendant
wall
wall
wall
wall
wall
wall
wall
wall
tread
tread
tread
tread
surf
surf
surf
5" SL.
5" SL.
5" SL.
5" SL.
5" SL.
5" SL.
UC
UC
UC

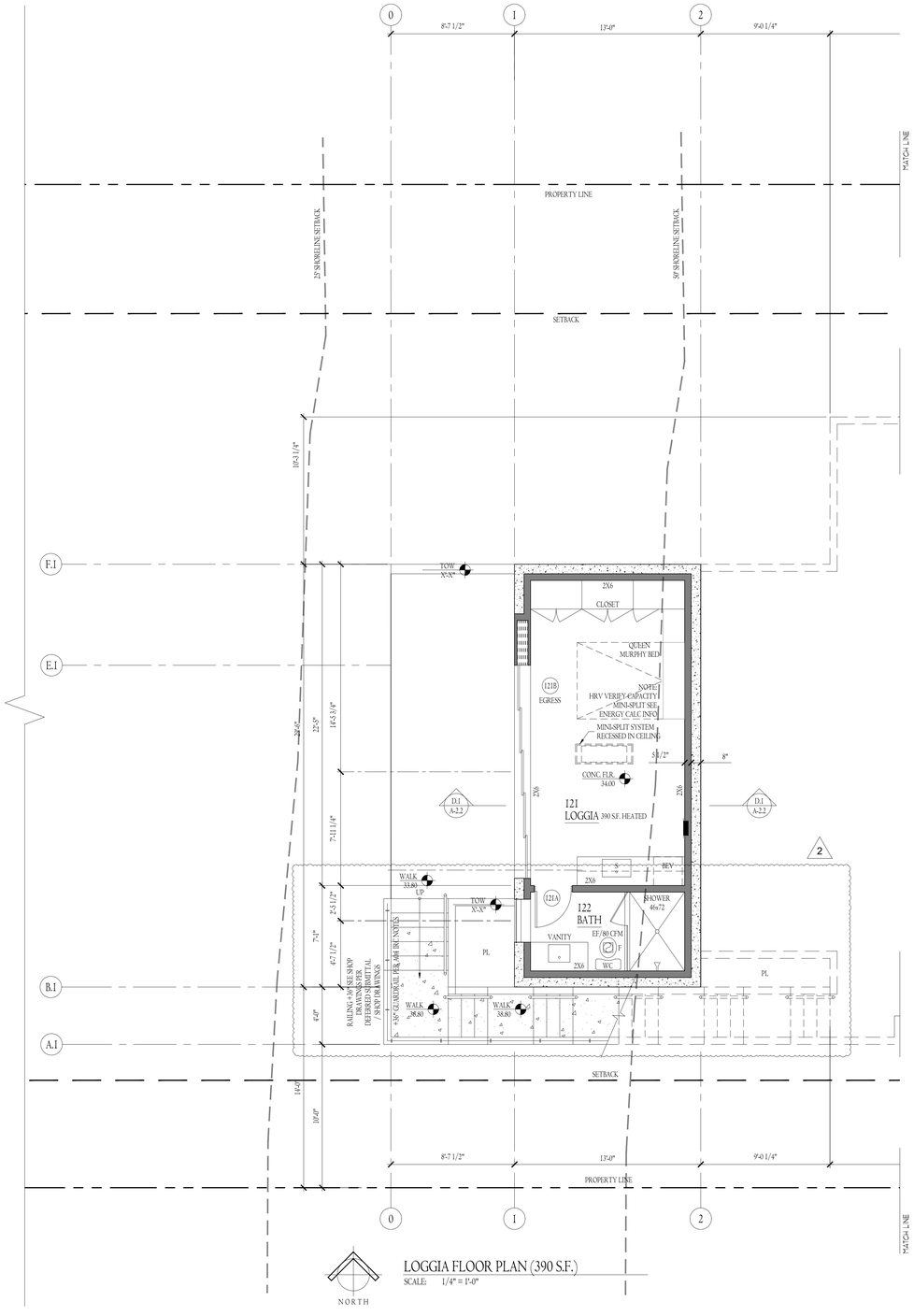

RF ARCHITECTURE
PH: (253)359-4039
RICHARD@RFARCHITECTURE.COM
7421 214TH AVE E BONNEYLAKE, WA 98391

6080
REGISTERED ARCHITECT
RICHARD W. FLAKE
STATE OF WASHINGTON

All drawings, specifications, plans, ideas, arrangements, and designs represented or referred to are the property of and owned by Richard Flake Architect whether the project for which they are made is executed or not. They were created, evolved, developed and produced for sole use on and in connection with this project and none of the above may be disclosed or given to or used by any person, firm, or corporation for any use or purpose whatsoever including any other project, except upon written permission of Richard Flake Architect.

Copyright 2023
Richard Flake Architect

MURRAY RESIDENCE

NEW SINGLE FAMILY RESIDENCE
3,804 SQ. FT.
MERCER ISLAND, WA 98040

DESIGN:
RWF

DRAWN:
HAVILAND CONSULTING

CHECKED:
RWF

REVISIONS:

1 PER CITY REVIEW
10.22.2023
REVISIONS

2 PER CITY REVIEW
9.6.2023
REVISIONS

September 15, 2023

FP-1

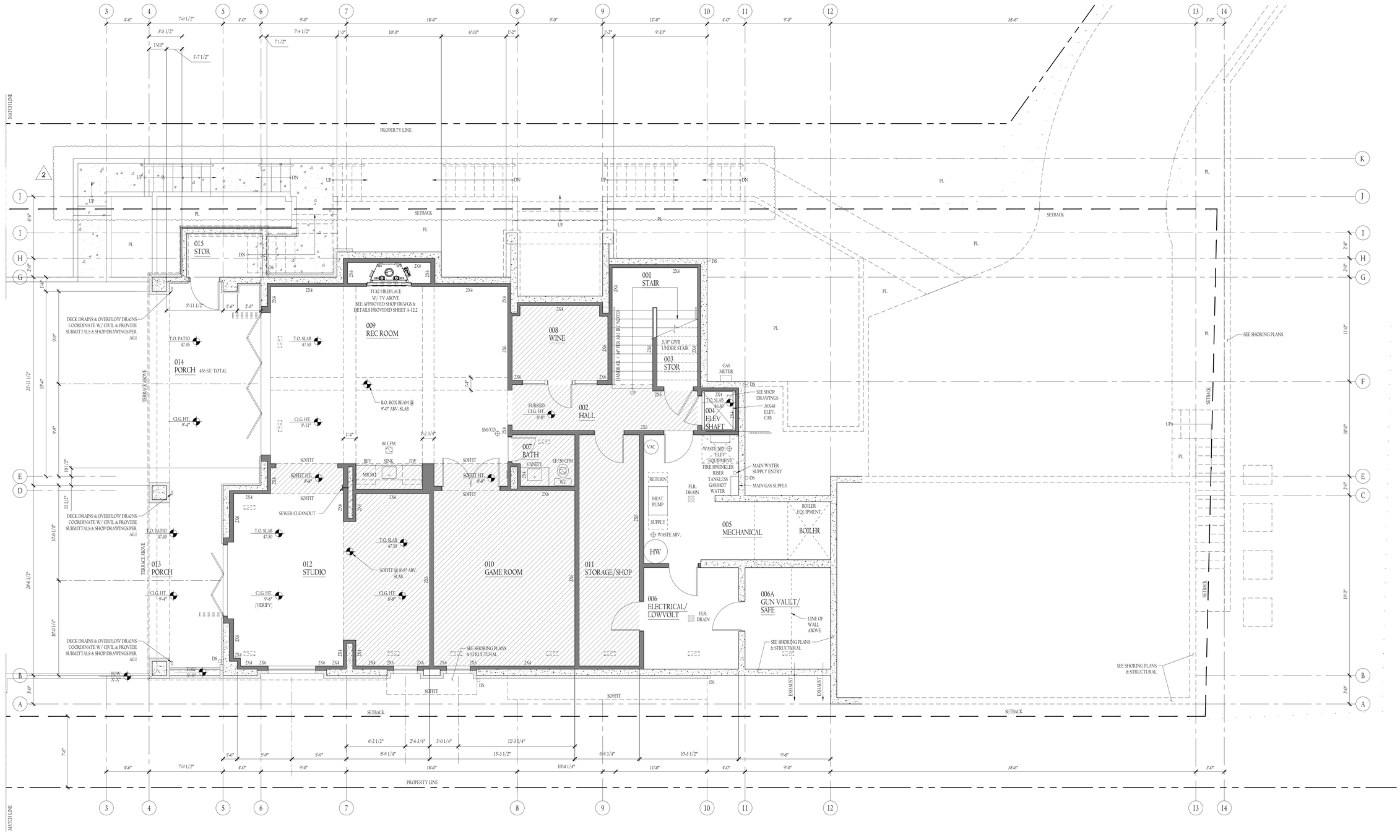

NORTH

BASEMENT PLAN (2,395 S.F.)

SCALE: 1/4" = 1'-0"

LEGEND

	2X WALL	DOOR NUMBER
	CONCRETE	WINDOW NUMBER

MURRAY RESIDENCE

NEW SINGLE FAMILY RESIDENCE
4803 FORESTLAND, WA 98040
MERCER ISLAND, WA 98040

RF ARCHITECTURE
PH: (253) 359-4039
RICHARD@RFARCHITECTURE.COM
7421 214TH AVE E BONNEYLAKE, WA 98391

6080 REGISTERED ARCHITECT RICHARD W. FLAKE STATE OF WASHINGTON

All drawings, specifications, plans, ideas, arrangements, and designs represented or referred to are the property of and owned by Richard Flake Architect in whether the project for which they are made is executed or not. They were created, evolved, developed and produced for sole use on and in connection with this project and none of the above may be disclosed or given to or used by any person, firm, or corporation for any use or purpose whatsoever including any other project, except upon written permission of Richard Flake Architect.

Copyright 2023
Richard Flake Architect

DESIGN: RWF

DRAWN: HAVILAND CONSULTING

CHECKED: RWF

REVISIONS:

1 PER CITY REVIEW 10-22-2021 REVISIONS

2 PER CITY REVIEW 8-8-2023 REVISIONS

September 15, 2023

FP-2

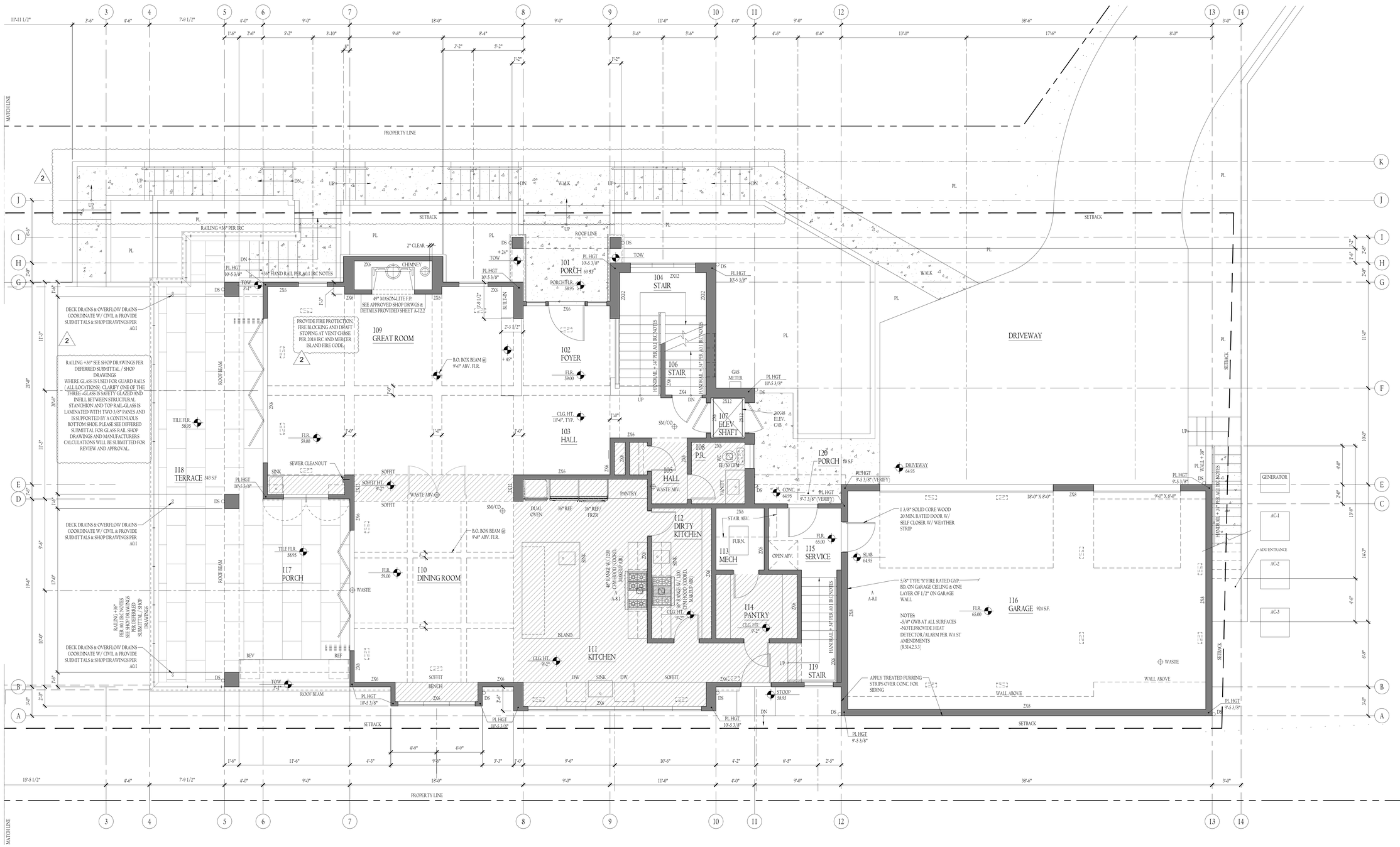

MAIN FLOOR PLAN (2,209 S.F.)

SCALE: 1/4" = 1'-0"

NORTH

LEGEND

	2X WALL	DOOR NUMBER
	CONCRETE	WINDOW NUMBER

RF ARCHITECTURE

PH: (253) 359-4039

RICHARD@RFARCHITECTURE.COM

7421 214TH AVE E BONNEYLAKE, WA 98391

6080 REGISTERED ARCHITECT RICHARD W. FLAKE STATE OF WASHINGTON

All drawings, specifications, plans, ideas, arrangements, and designs represented or referred to are the property of and owned by Richard Flake Architect in whether the project for which they are made is executed or not. They were created, evolved, developed and produced for sole use on and in connection with this project and none of the above may be disclosed or given to or used by any person, firm, or corporation for any use or purpose whatsoever including any other project, except upon written permission of Richard Flake Architect.

Copyright 2023
Richard Flake Architect

MURRAY RESIDENCE

NEW SINGLE FAMILY RESIDENCE

4 8 0 3 FOREST AVE SE

MERCER ISLAND, WA 98040

DESIGN: RWF

DRAWN: HAVILAND CONSULTING

CHECKED: RWF

REVISIONS:

1 PER CITY REVIEW 10-22-2021 REVISIONS

2 PER CITY REVIEW 8-8-2023 REVISIONS

September 15, 2023

FP-3

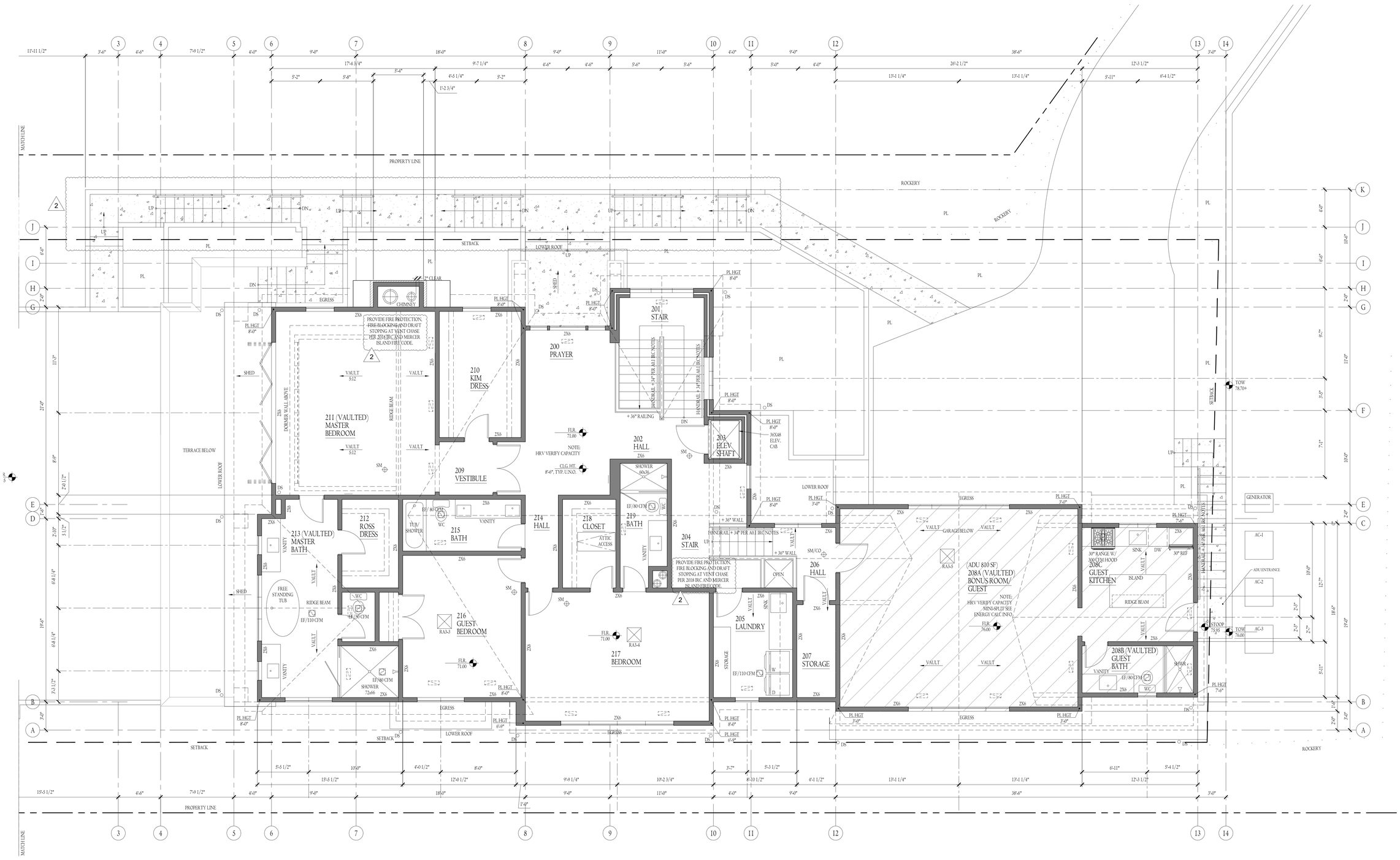

UPPER FLOOR PLAN (2,369.7 S.F.)

SCALE: 1/4" = 1'-0"

NORTH

LEGEND

2X WALL

CONCRETE

DOOR NUMBER

WINDOW NUMBER

RF ARCHITECTURE
PH: (253)359-4039
RICHARD@RFARCHITECTURE.COM
7421 214TH AVE E BONNEY LAKE, WA 98391

6080 REGISTERED ARCHITECT RICHARD W. FLAKE STATE OF WASHINGTON

All drawings, specifications, plans, ideas, arrangements, and designs represented or referred to are the property of and owned by Richard Flake Architect in whether the project for which they are made is executed or not. They were created, evolved, developed and produced for sole use on and in connection with this project and none of the above may be disclosed or given to or used by any person, firm, or corporation for any use or purpose whatsoever including any other project, except upon written permission of Richard Flake Architect.

Copyright 2023
Richard Flake Architect

MURRAY RESIDENCE

NEW SINGLE FAMILY RESIDENCE
MERCER ISLAND, WA 98040

DESIGN: RWF

DRAWN: HAVILAND CONSULTING

CHECKED: RWF

REVISIONS:

1 PER CITY REVIEW 10-23-2023 REVISIONS

2 PER CITY REVIEW 4-8-2024 REVISIONS

September 15, 2023

FP-4

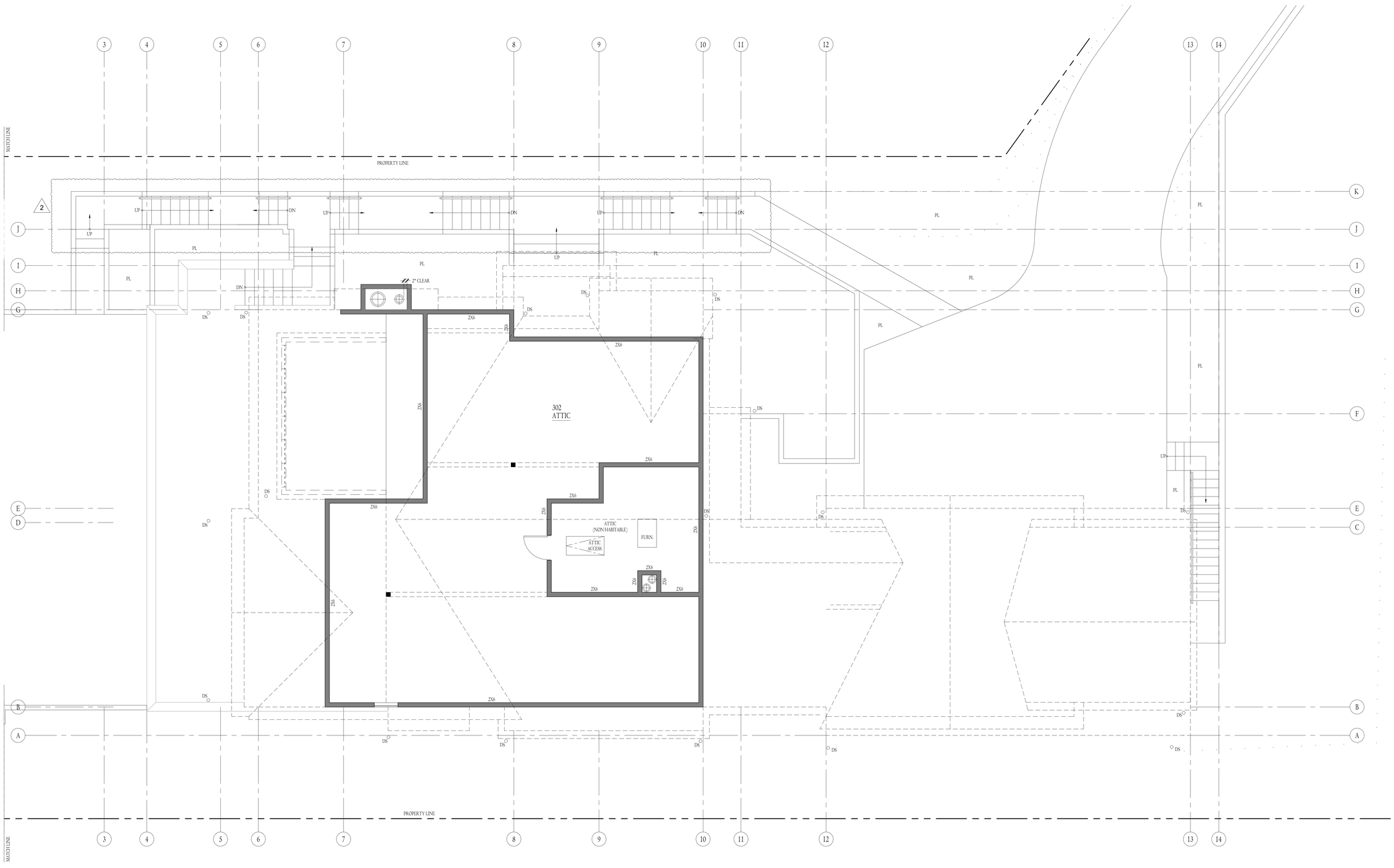

NORTH

ATTIC PLAN

SCALE: 1/4" = 1'-0"

LEGEND

- 2X WALL
- CONCRETE
- DOOR NUMBER
- WINDOW NUMBER

RF ARCHITECTURE

PH: (253) 359-4039

RICHARD@RFARCHITECTURE.COM

7421 214TH AVE E BONNEYLAKE, WA 98391

6080 REGISTERED ARCHITECT RICHARD W. FLAKE STATE OF WASHINGTON

All drawings, specifications, plans, ideas, arrangements, and designs represented or referred to are the property of and owned by Richard Flake Architect in whether the project for which they are made is executed or not. They were created, evolved, developed and produced for sole use on and in connection with this project and none of the above may be disclosed or given to or used by any person, firm, or corporation for any use or purpose whatsoever including any other project, except upon written permission of Richard Flake Architect.

Copyright 2023
Richard Flake Architect

MURRAY RESIDENCE

NEW SINGLE FAMILY RESIDENCE
9804 MERCER ISLAND WAY
MERCER ISLAND, WA 98040

DESIGN: RWF

DRAWN: HAVILAND CONSULTING

CHECKED: RWF

REVISIONS:

1 PER CITY REVIEW 10.22.2021 REVISIONS

2 PER CITY REVIEW 3.8.2023 REVISIONS

September 15, 2023

FP-5

SHORELINE NATIVE PLANTING DIAGRAM

TOTAL SHORELINE AREA*	1403 SF
75% REQUIRED NATIVE PLANTING AREA	1052 SF
PROPOSED NATIVE PLANTING AREA	1069 SF

*SHORELINE AREA DEFINED AS AREA BETWEEN ORDINARY HIGH WATER MARK (OHWM) AND 20' SETBACK FROM OHWM.

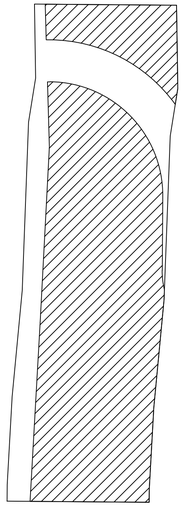

EXISTING TREES LEGEND

- TREES TO BE REMOVED - SEE ARBORIST REPORT & TOPOGRAPHIC BOUNDARY SURVEY
- TREES TO REMAIN AND PROTECT

TREE PROTECTION NOTES

1. TREE PROTECTION FENCING SHALL CONSIST OF 6' TALL CHAIN-LINK FENCING, SECURELY STAKED INTO PLACE.
2. TREE PROTECTION ZONE SIGNAGE, PER MERCER ISLAND CODE SHALL BE POSTED EVERY TEN FEET (10') ALONG THE FENCE PERIMETER AND SHALL BE MADE TO BE WEATHER RESISTANT.
3. TREE PROTECTION FENCING SHALL BE PLACED AS SHOW ON THE PLAN.
4. INVASIVE OR NON-NATIVE SPECIES SHALL BE REMOVED, BY THE USE OF HAND TOOLS, WITHIN THE TREE PROTECTION ZONE.
5. BARE SOILS INSIDE THE TREE PROTECTION ZONE SHOULD BE COVERED WITH ARBORIST CHIPS OR A COMMERCIAL MULCH MATERIAL, TO A DEPTH OF 3".
6. NO PRUNING OF LIMBS SHOULD BE NECESSARY FOR BUILDING CLEARANCE OR CONSTRUCTION AREA ACCESS. IF LIMBS DO NEED TO BE TRIMMED, THIS WORK SHALL BE DONE UNDER THE SUPERVISION OF A PROFESSIONAL TREE PERSON.
7. ANY EXCAVATION NEAR THE TREE PROTECTION ZONE (WITHIN 2') SHALL HAVE AN ARBORIST ONSITE TO MONITOR ROOTS THAT MIGHT BE EXPOSED. ANY ROOTS THAT NEED TO BE SEVERED SHALL BE FIRST ASSESSED BY THE ONSITE ARBORIST AND THEN SHALL BE PRUNED USING THOSE METHODS AND PRACTICES AS DETAILED IN ANSI STANDARD A300 (PART 8)-2013 ROOT MANAGEMENT.
8. MITIGATION WILL LIKELY INCLUDE REPLANTING OF UNDERSTORY NATIVE SHRUBS AND GROUNDCOVERS.

PLANT SCHEDULE

TREES	CODE	QTY	BOTANICAL / COMMON NAME	CAL
	AC	6	ACER CIRCINATUM VINE MAPLE	1.5" CAL.
	AM	1	ACER MACROPHYLLUM BIG LEAF MAPLE	1.5" CAL.
	AS	1	ARBUTUS UNEDO STRAWBERRY TREE	1.5" CAL.
	CD	4	CALOCEDRUS DECURRENS INCENSE CEDAR	6` HT MIN
	PE	5	PRUNUS EMARGINATA BITTER CHERRY	1.5" CAL.
	RP	3	RHAMNUS PURSHIANA CASCARA	1.5" CAL.

SHRUBS	CODE	QTY	BOTANICAL / COMMON NAME	SIZE
	CR	13	CORNUS SERICEA RED TWIG DOGWOOD	2 GAL
	DT	48	DESCHAMPSIA CESPITOSA TUFTED HAIR GRASS	1 GAL
	HD	4	HOLODISCUS DISCOLOR OCEAN-SPRAY	5 GAL
	PM	13	POLYSTICHUM MUNITUM WESTERN SWORD FERN	1 GAL
	SA	6	SYMPHORICARPOS ALBUS COMMON WHITE SNOWBERRY	2 GAL

GROUND COVERS	CODE	QTY	BOTANICAL / COMMON NAME	CONT
	AU	87	ARCTOSTAPHYLOS UVA-URSI KINNIKINNICK	4"POT

Name: Murray project 4803 Forest Ave SE

Assessment date: June 2019
Revised: December 15, 2020

Thomas QuigleyName: Murray project ISA certified arborist PN0655A4803 Forest Ave SE

	Species	DBH"	Drpln rad'	Cndtn	Remarks	Designation	Rm	RTN	Mitigation
	On-site Trees								
287	Acer macrophyllum, Big leaf maple	34"	24' south	Good	Tree root collar is located 4-5' below existing/proposed grade	Exceptional		X	
290	Calocedrus decurrens. Incense cedar	16"	10' radius	Excellent	To be removed	Large	X		2
292	Acer macrophyllum, Big leaf maple	11"	12' south	Fair	Located 5' from BLM stump with Kretzmaria fungii. Leans 5% south.	Large	X		2
293	Acer macrophyllum, Big leaf maple	7"	5' south, 0' north	Good	4", 2", 5" equlas 6.7" DBH. Shared canopy. Leans 5% south	Non-reg			Non-reg
294	Acer macrophyllum, Big leaf maple	13"	18' south	Fair	Tree leans south so canopy is unusually heavy to the south.	Large	X		2
295	Acer macrophyllum, Big leaf maple	17"	0' south	Good	Shared canopy with other more dominant trees.	Large	X		2
296	Acer macrophyllum, Big leaf maple	15"	8' south	Fair	Dead stem and limbs, low vigor	Large	X		2
297	Acer macrophyllum, Big leaf maple	9"	18' south	Good	To be removed	Non-reg			Non-reg
298	Acer macrophyllum, Big leaf maple	12.5"	18' south	Good	no canopy coverage to the north, to be removed	Large	X		2
744	Acer macrophyllum, Big leaf maple	19"	15'	Excellent	Out of proposed construction area, tree protection from nearby, off-site construction	Large		X	
745	Thuja plicata, Western red cedar	19", 11"	15' south	Fair	Out of proposed construction area.	Large		X	
746	Acer macrophyllum, Big leaf maple	36"+	18' SW	Fair	Decay column. Out of proposed construction area.	Exceptional		X	
748	Acer macrophyllum, Big leaf maple	22"	0' north 20' south	Fair	Out of proposed construction area.	Large		X	
750	Prunus, plum?	7"	6'	Fair	under canopy of nearby Tree 744	Non-reg			Non-reg
751	Acer macrophyllum, Big leaf maple	36"+	' south 15' w	Fair	Canopy slightly overhangs construction area below. Decay, deadwood.	Exceptional	X		6
					Total trees onsite = 15, 3 Non-regulated. 30% of 12 is 3.6 or 4 trees. 5 trees retained.	**Total Replant**			**18**
	Off-site Trees								
288	Acer macrophyllum, Big leaf maple	est 48" +	6' south	Good	Off-site tree with canopy dominated by Tree #287	Exceptional		**RTN X**	**Mitigation**
289	Acer macrophyllum, Big leaf maple	est 30"	15' radius	Good	Off-site tree with hornet nest in ground at root collar.	Exceptional		X	
291	Acer macrophyllum, Big leaf maple	2 x 18"	5' south	Fair	Was 3-stem, center stem cut at 10', deadwood, narrow.	Exceptional		X	
299	Acer macrophyllum, Big leaf maple	21"	3' south	Fair	Off-site tree, large decay column, good response growth.	Large	X		2
300	Acer macrophyllum, Big leaf maple	15", 20.5"	8' south	Fair	Off-site, located just 8' from power pole with transformer.	Large		X	
					Total trees offsite = 5, 4 trees retained.	**Total Replant**			**2**

MITIGATION TREES

PROPOSED ONSITE TREES: (6) ACER CIRCINATUM, (1) ACER AMCROPHYLLUM, (4) CALOCEDRUS DECURRENS, (5) PRUNUS EMARGINATA, (2) RHAMNUS PURSHIANA

PROPOSED OFFSITE TREES: (1) RHAMNUS PURSHIANA, (1) ARBUTUS UNEDO

LANDSCAPE NOTES

1. THE REMAINDER OF THE SITE OUTSIDE OF THE 20' SHORELINE ZONE WILL BE LANDSCAPED PER MICC 19.02.020.F.3.
2. ALL PROPOSED LANDSCAPE SHALL BE IRRIGATED.
3. TREE DRIP LINES MUST BE PROTECTED DURING CONSTRUCTION.
4. MERCER ISLAND WEED REMOVAL: DEVELOPMENT PROPOSALS FOR A NEW SINGLE-FAMILY HOME SHALL REMOVE JAPANESE KNOTWEED (POLYGONUM CUSPIDATUM) AND REGULATED CLASS A, REGULATED CLASS B, AND REGULATED CLASS C WEEDS IDENTIFIED ON THE KING COUNTY NOXIOUS WEED LIST, AS AMENDED, FROM REQUIRED LANDSCAPING AREASESTABLISHED PURSUANT TO SUBSECTION (F)(3)(A) OF THIS SECTION. NEW LANDSCAPING ASSOCIATED WITH NEW SINGLE-FAMILY HOME SHALL NOT INCORPORATE ANY WEEDS IDENTIFIED ON THE KING COUNTY NOXIOUS WEED LIST, AS AMENDED. PROVIDED, THAT REMOVAL SHALL NOT BE REQUIRED IF THE REMOVAL WILL RESULT IN INCREASED SLOPE INSTABILITY OR RISK OF LANDSLIDE OR EROSION.
5. TREE REPLACEMENT: REGULATED TREES TO BE REMOVED WILL BE REPLACED PER CITY REQUIREMENTS. SEE CITY OF MERCER ISLAND TREE INVENTORY AND REPLACEMENT SUBMITTAL FORM FOR COMPLETE TREE REPLACEMENT CALCULATIONS.

EXCERPT FROM MICC 19.10.070(B)(1):

REPLACEMENT TREES SHALL BE LOCATED IN THE FOLLOWING ORDER OF PRIORITY FROM MOST IMPORTANT TO LEAST IMPORTANT:

a. ON-SITE REPLACEMENT ADJACENT TO OR WITHIN CRITICAL TREE AREAS AS DEFINED IN CHAPTER 19.16 MICC;

b. ON-SITE REPLACEMENT OUTSIDE OF CRITICAL TREE AREAS ADJACENT TO OTHER RETAINED TREES MAKING UP A GROVE OR STAND OF TREES;

c. ON-SITE REPLACEMENT OUTSIDE OF CRITICAL TREE AREAS; AND

d. OFF-SITE IN ADJACENT PUBLIC RIGHT-OF-WAY WHERE EXPLICITLY AUTHORIZED BY THE CITY.

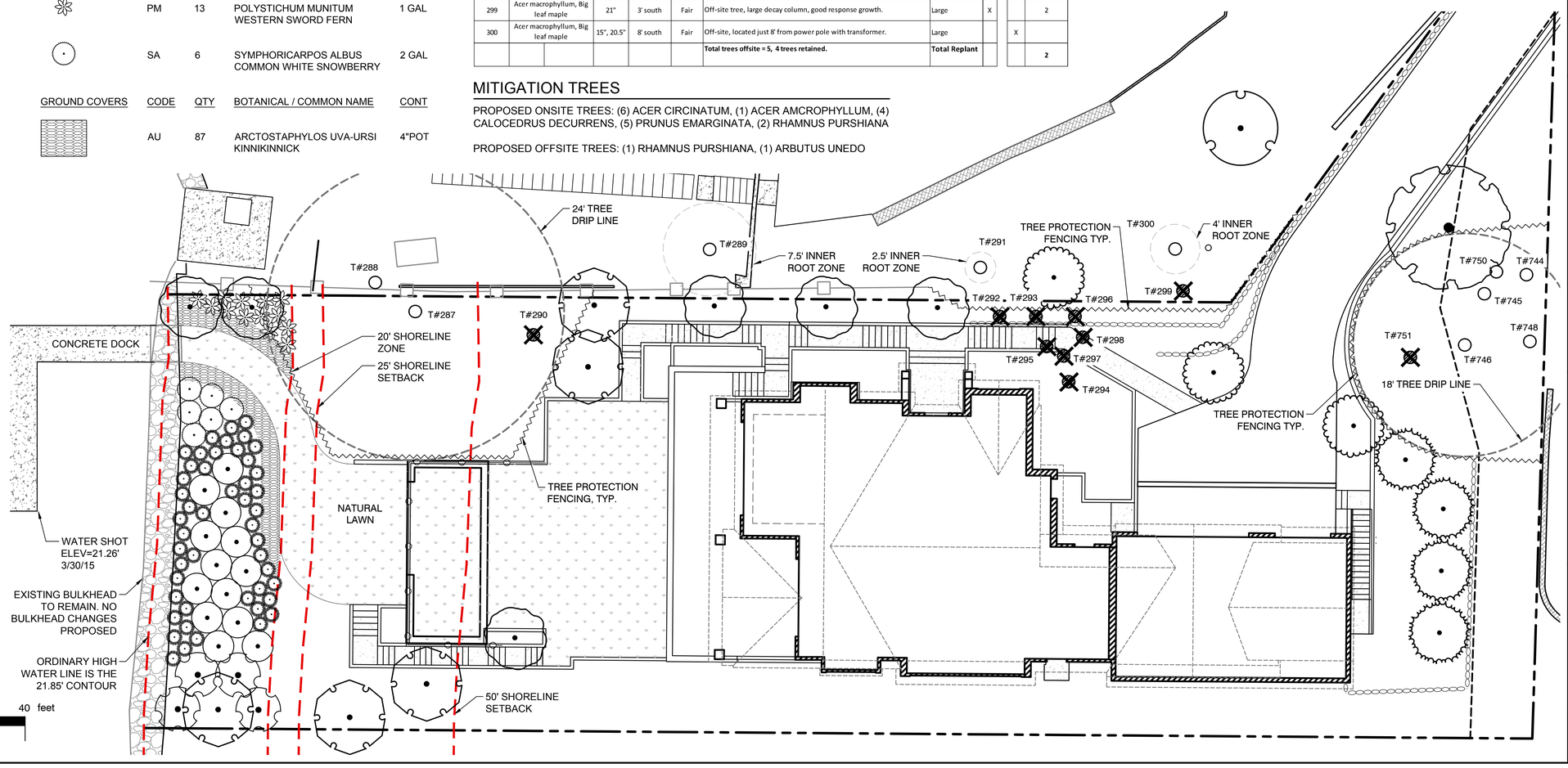

REVISIONS	DATE	BY
1 PERMIT SUBMITTAL	5-10-2021	RR
2 PERMIT RESUBMITTAL	4-17-2023	JB
3 PERMIT RESUBMITTAL	9-06-2023	JB

SCJ STUDIO
LANDSCAPE ARCHITECTURE
3625 WOODLAND PARK AVE N, SUITE 100
P: 206-708-1862
SCJSTUDIOLA.COM

SHEET TITLE: SHORELINE PLANTING & TREE REPLACEMENT PLAN

PROJECT NAME: Murray Residence
4803 Forest Ave SE
Mercer Island, WA

SEAL:

DESIGNER:	JM
DRAWN BY:	JB
APPROVED BY:	JM
DATE:	May, 10 2021
JOB No:	3476.01
DRAWING FILE No:	
DRAWING No:	LA-1.0
SHEET No:	01 OF 02

Sep 08, 2023 3:02:47pm – User: jenn.biondolillo
N:\PROJECTS\3476 ROSS MURRAY\3476.01 MURRAY RESIDENCE\CAD\3476.01_PERMIT.DWG

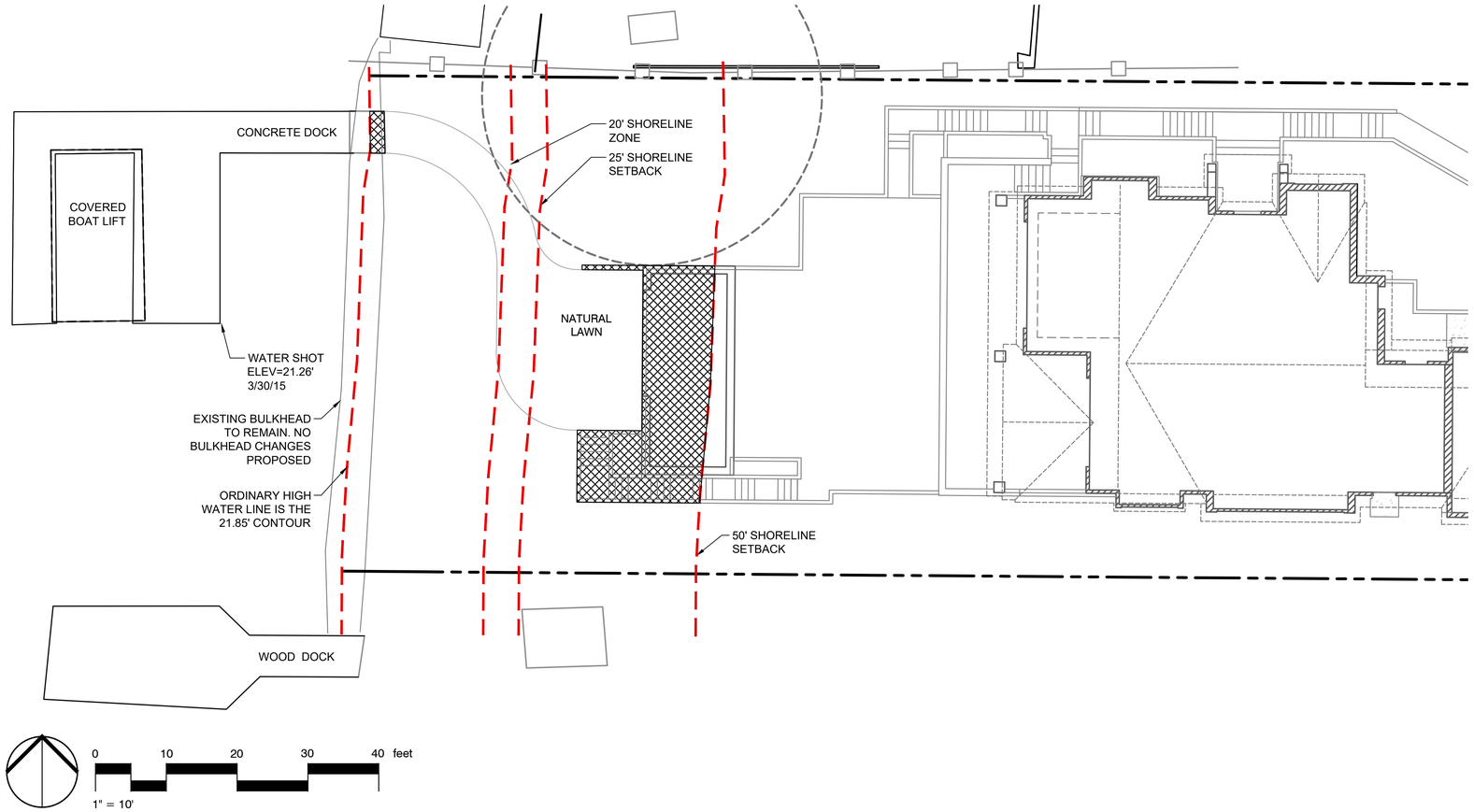

LEGEND

HARDSCAPE AND LOT COVERAGE

HARDSCAPE WITHIN 25' SHORELINE SETBACK

MAXIMUM 10% HARDSCAPE ALLOWED WITHIN 25' SHORELINE SETBACK.

TOTAL AREA OF 25' SHORELINE SETBACK:	1,753 SF
HARDSCAPE AREA ALLOWED:	175 SF
HARDSCAPE PROPOSED:	12 SF

HARDSCAPE AND LOT COVERAGE IN 50' SHORELINE SETBACK

MAXIMUM 30% HARDSCAPE AND LOT COVERAGE ALLOWED BETWEEN 25' AND 50' SHORELINE SETBACK.

TOTAL AREA BETWEEN 25' - 50' SHORELINE SETBACK:	1,755 SF
HARDSCAPE AND LOT COVERAGE AREA ALLOWED:	526 SF
HARDSCAPE AND LOT COVERAGE PROPOSED:	414 SF

REVISIONS		DATE	BY
1	PERMIT SUBMITTAL	5-10-2021	RR
2	PERMIT RESUBMITTAL	4-17-2023	JB
3	PERMIT RESUBMITTAL	9-08-2023	JB

SCJ STUDIO
LANDSCAPE ARCHITECTURE
3625 WOODLAND PARK AVE N, SUITE 100
P: 206-708-1862
SCJSTUDIOLA.COM

SHEET TITLE: SHORELINE HARDSCAPE AND LOT COVERAGE

PROJECT NAME: Murray Residence
4803 Forest Ave SE
Mercer Island, WA

SEAL:

DESIGNER:	JM
DRAWN BY:	JB
APPROVED BY:	JM
DATE:	May, 10 2021
JOB No:	3476.01
DRAWING FILE No:	
DRAWING No:	LA-2.0
SHEET No:	02 OF 02

Sep 08, 2023 2:54:48pm – User jena.biondolillo
N:\PROJECTS\3476 ROSS MURRAY\3476.01 MURRAY RESIDENCE\CAD\3476.01_PERMIT.DWG

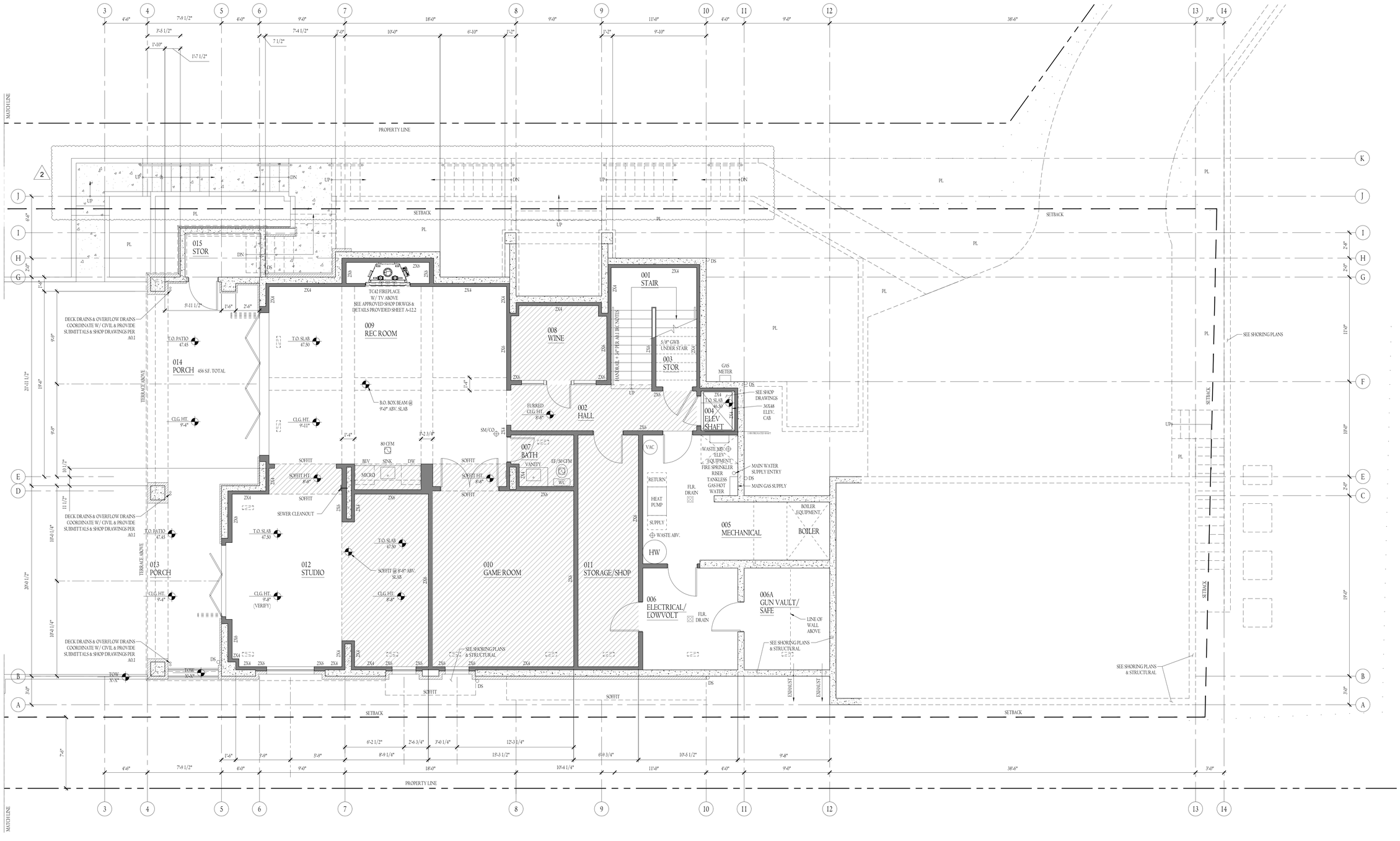

NORTH

BASEMENT PLAN (2,395 S.F.)

SCALE: 1/4" = 1'-0"

LEGEND

- 2X WALL
- CONCRETE
- DOOR NUMBER
- WINDOW NUMBER

RF ARCHITECTURE
PH: (253)359-4039
RICHARD@RFARCHITECTURE.COM
7421 214TH AVE E BONNEYLAKE, WA 98391

6080 REGISTERED ARCHITECT RICHARD W. FLAKE STATE OF WASHINGTON

All drawings, specifications, plans, ideas, arrangements, and designs represented or referred to are the property of and owned by Richard Flake Architect in whether the project for which they are made is executed or not. They were created, evolved, developed and produced for sole use on and in connection with this project and none of the above may be disclosed or given to or used by any person, firm, or corporation for any use or purpose whatsoever including any other project, except upon written permission of Richard Flake Architect.

Copyright 2023
Richard Flake Architect

IDENCE
RESIDENCE
WA 98040

MURRAY RESIDENCE
NEW SINGLE FAMILY RESIDENCE
4 MERCER ISLAND

DESIGN: RWF
DRAWN: HAVILAND CONSULTING
CHECKED: RWF
REVISIONS:
PER CITY REVIEW 10-22-2023
REVISIONS
PER CITY REVIEW 8-8-2023
REVISIONS

September 15, 2023

ELEV-1

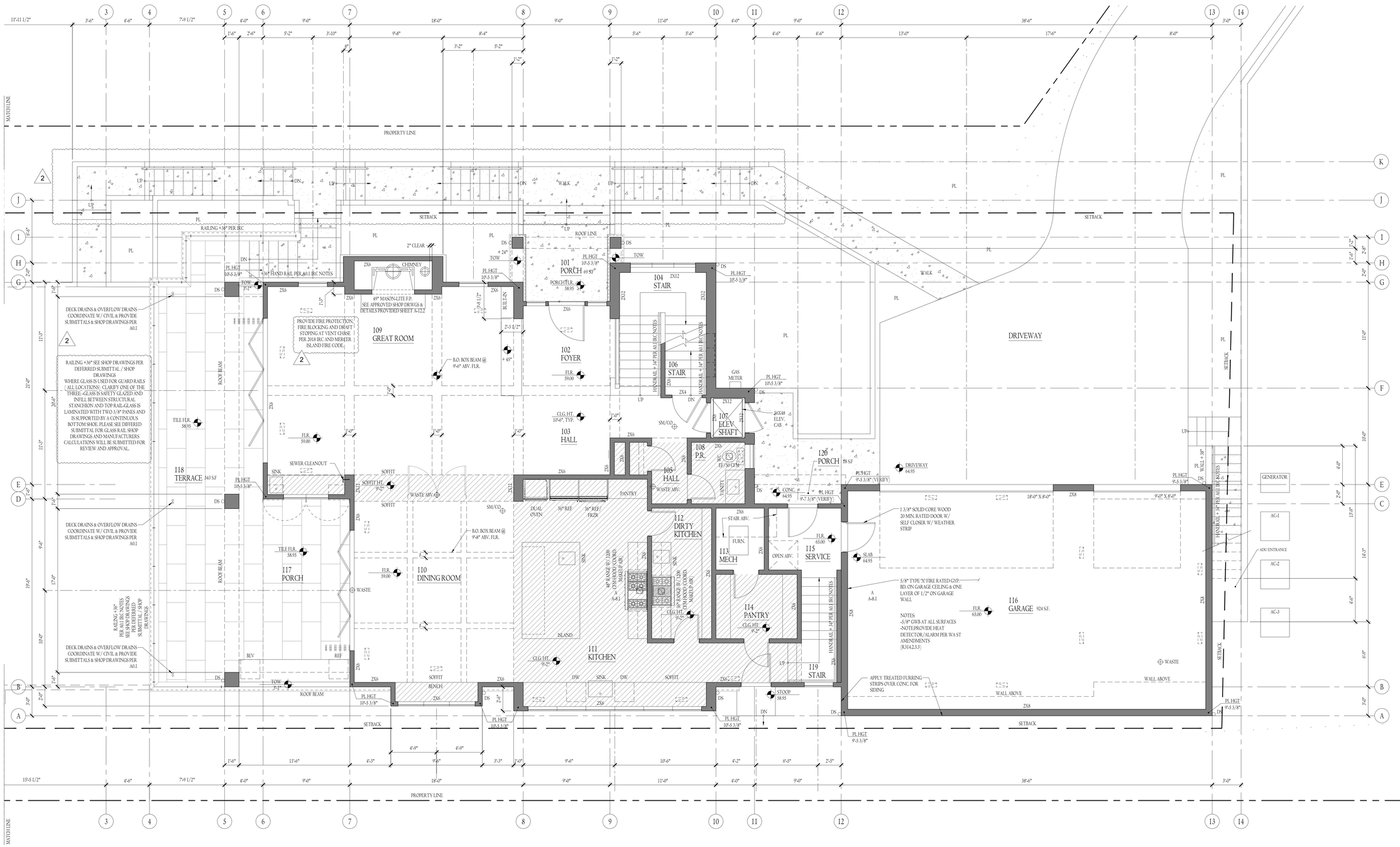

NORTH

MAIN FLOOR PLAN (2,209 S.F.)

SCALE: 1/4" = 1'-0"

LEGEND

- 2X WALL
- CONCRETE
- DOOR NUMBER
- WINDOW NUMBER

RF ARCHITECTURE
PH: (2 5 3) 3 5 9 - 4 0 3 9
RICHARD@RFARCHITECTURE.COM
7421 214TH AVE E BONNEYLAKE, WA 98391

6080 REGISTERED ARCHITECT RICHARD W. FLIKE STATE OF WASHINGTON

All drawings, specifications, plans, ideas, arrangements, and designs represented or referred to are the property of and owned by Richard Flike Architect in whether the project for which they are made is executed or not. They were created, evolved, developed and produced for sole use on and in connection with this project and none of the above may be disclosed or given to or used by any person, firm, or corporation for any use or purpose whatsoever including any other project, except upon written permission of Richard Flike Architect.

Copyright 2023
Richard Flike Architect

MURRAY RESIDENCE

NEW SINGLE FAMILY RESIDENCE
8080 MERCER ISLAND WAY
MERCER ISLAND, WA 98040

DESIGN: RWF
DRAWN: HAVILAND CONSULTING
CHECKED: RWF
REVISIONS:
PER CITY REVIEW 10-23-2023 REVISIONS
PER CITY REVIEW 4-8-2024 REVISIONS

September 15, 2023

ELEV-2

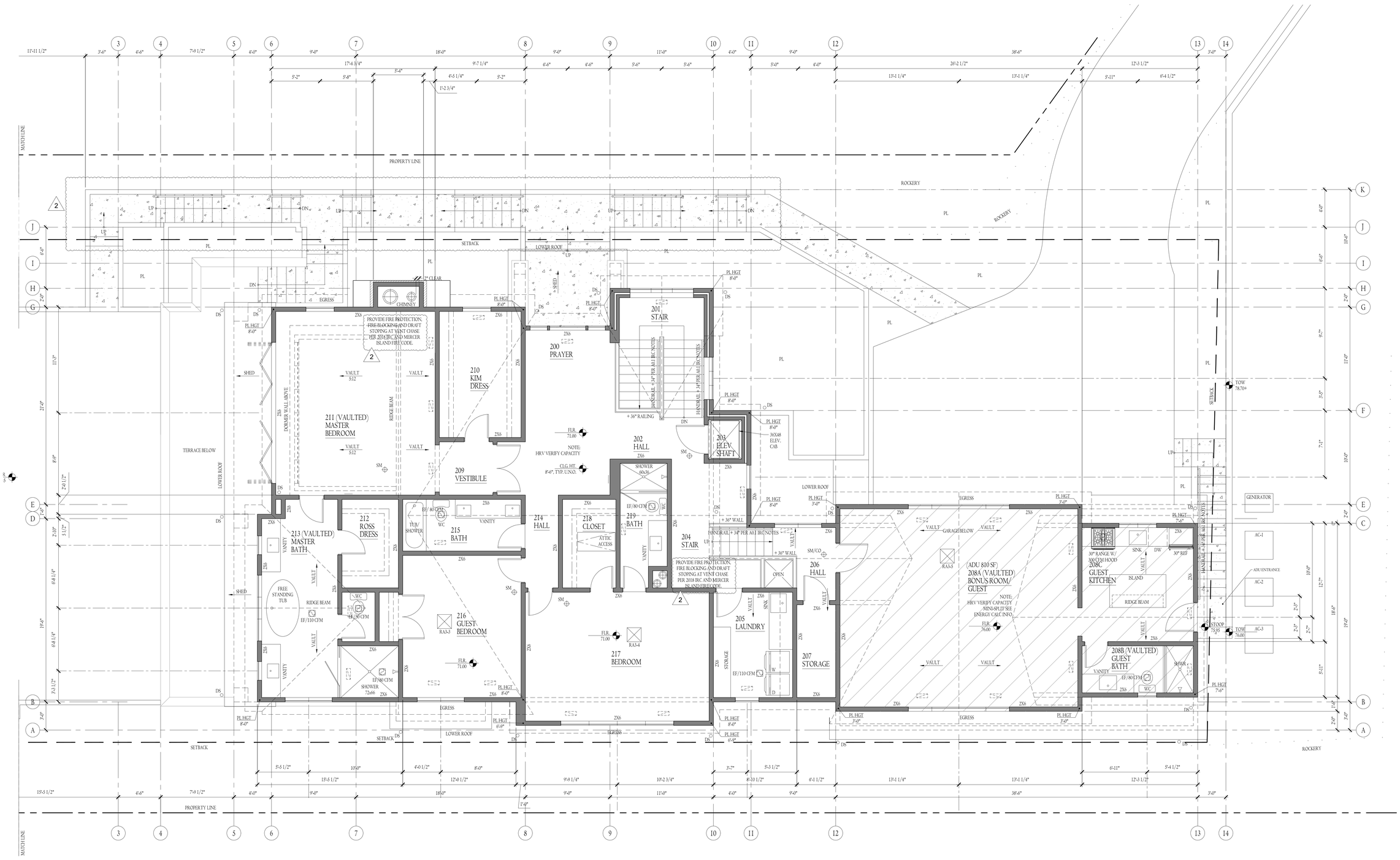

UPPER FLOOR PLAN (2,369.7 S.F.)

SCALE: 1/4" = 1'-0"

NORTH

LEGEND

- 2X WALL
- CONCRETE
- DOOR NUMBER
- WINDOW NUMBER

RF ARCHITECTURE
PH: (253)359-4039
RICHARD@RFARCHITECTURE.COM
7421 214TH AVE E BONNEYLAKE, WA 98391

6080 REGISTERED ARCHITECT RICHARD W. FLAKE STATE OF WASHINGTON

All drawings, specifications, plans, ideas, arrangements, and designs represented or referred to are the property of and owned by Richard Flake Architect in whether the project for which they are made is executed or not. They were created, evolved, developed and produced for sole use on and in connection with this project and none of the above may be disclosed or given to or used by any person, firm, or corporation for any use or purpose whatsoever including any other project, except upon written permission of Richard Flake Architect.

Copyright 2023
Richard Flake Architect

MURRAY RESIDENCE

NEW SINGLE FAMILY RESIDENCE
MERCER ISLAND, WA 98040

DESIGN: RWF
DRAWN: HAVILAND CONSULTING
CHECKED: RWF
REVISIONS:
1 PER CITY REVIEW 10-23-2023 REVISIONS
2 PER CITY REVIEW 4-8-2024 REVISIONS

September 15, 2023

ELEV-3

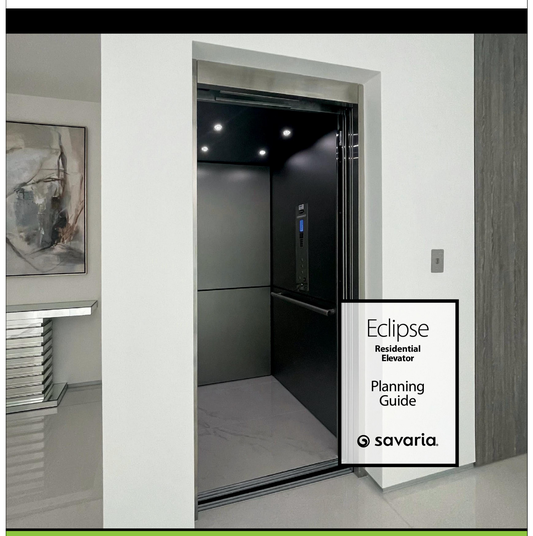

Applicable Codes:

ASME A17.1/CSA-B44
Safety Code for Elevators and Escalators
Section 5.3 – Private Residential Elevators

IMPORTANT NOTICE

This Planning Guide provides nominal dimensions and specifications useful for the initial planning of a project. Before beginning actual construction, make sure you have the installation (shop) drawings customized with specifications and dimensions for your specific project.

Lift configurations and dimensions are in accordance with our interpretation of the standards set forth by the codes listed on the front cover of this Planning Guide. Please consult Savaria or the authorized Savaria dealer in your area for more specific information pertaining to your project, including any discrepancy between referenced standards and those of any local codes or laws.

The dimensions and specifications in this Planning Guide are subject to change (without notice) due to product enhancements and continually evolving codes and product applications.

Visit our website **www.savaria.com** for the most current Eclipse drawings and dimensions.

Purpose of this guide

This guide assists architects, contractors, and lift professionals to incorporate the Eclipse Residential Elevator into a residential building design. The design and manufacture of the Eclipse Residential Elevator meets the requirements of the following codes and standards:

- ASME A17.1/CSA B44 2000, Section 5.3
- ASME A17.1/CSA B44 2004, Section 5.3
- ASME A17.1 2004, Addendum 2005, Section 5.3
- ASME A17.1/CSA B44 2007, Section 5.3
- ASME A17.1/CSA B44, Addendum 2008, Section 5.3
- ASME A17.1/CSA B44 2010, Section 5.3
- ASME A17.1/CSA B44 2013, Section 5.3
- ASME A17.1/CSA B44 2016, Section 5.3
- ASME A17.1/CSA B44 2019, Section 5.3
- ASME A17.1 1996, Part 5

We recommend that you contact your local authority having jurisdiction to ensure that you adhere to all local rules and regulations pertaining to residential elevators.

How to use this guide

1 Determine your client's intended use of the lift.
2 Determine the local code requirements.
3 Determine the site installation parameters.
4 Determine the cab type and hoistway size requirements.
NOTE: If the Eclipse has Auto Slim Doors, do not refer to the tables on pages 6 and 7; refer to Appendix A.
5 Plan for electrical requirements.

Copyright © 2022
Savaria Concord Lifts, Inc.
All Rights Reserved
Printed in Canada

Revision history this guide

- April 2, 2008 – Added rail forces
- July 31, 2008 – Added rail forces diagram
- January 8, 2008 – Added component weights to specifications; modified center of door for type 5 center
- June 4, 2009 – Added WARNING on page 6 not to install pipes conveying steam, gas or liquid in hoistway
- June 23, 2009 – Added dimension to structural view drawing Figure 1-11 on page 8
- September 25, 2009 – Corrected power supply and lighting supply specifications on pages 2, 12, 13 and 14
- February 9, 2010 – Added recommended manufacturers for circuit breakers at the distribution panel on page 12
- March 31, 2010 – Corrected Type 3 cab measurements on page 4; Corrected Type 4 cab measurements on page 5
- September 9, 2010 – Added note at bottom of tables on pages 4 and 5; Corrected Type 5 cab measurements on page 5; Corrected controller and brake resistor dimensions on page 13
- February 23, 2011 – Added note to step 4 above under "How to use this guide"; Reformatted specifications table on pages 4 and 5; Added "Auto slim doors" to "Options" in specification table on page 5; Updated IMPORTANT note at bottom of pages 6 and 7; Added Appendix A with Auto Slim Doors planning information
- April 25, 2011 – Updated standard features and options in specifications table on pages 4 and 5; Updated Auto Slim Door entrance assembly and elevation drawings in Appendix A
- July 20, 2011 – Updated to 6 stops in specifications table on page 4
- August 12, 2011 – Revised Slim Door drawings on pages 18 and 19
- August 24, 2011 – Removed 208V reference throughout manual
- September 15, 2011 – Revised Slim Door drawings on pages 18 and 19
- October 11, 2011 – Clarified the meaning of "centerline" in the drawings on pages 10 and 11
- October 21, 2011 – Corrected the "Center of door B" dimensions in Tables for Type 3 and Type 4 cabs on pages 6 and 7
- August 30, 2012 – Revised slim door drawings on pages 20 - 30
- October 9, 2012 – Removed motor brake resistor from drawing on page 15
- November 6, 2012 – Added door recommendation on page 13
- December 3, 2012 – Revised note at bottom of Electrical Requirements on page 14
- February 21, 2013 – Changed pot lights from incandescent to halogen in specifications table on page 4
- April 25, 2013 – Revised options in specifications table on page 5
- July 8, 2013 – Added Noise Level to specifications table on page 4
- October 21, 2013 – Revised power supply info in specs table on page 4 & electrical requirements on page 14
- March 13, 2014 – Revised specifications table on pages 4 and 5
- April 29, 2014 – Revised "rough opening" dimension in drawings on pages 18, 20, 22, 24, 26, 28, and 30; Changed "Minimum Overhead" spec on page 4 from 114" to 112" for 96" cab
- August 29, 2014 – Added controller box dimensions on page 16
- November 5, 2014 – Revised Applicable codes on page 3
- March 4, 2015 – Revised drawing on page 15
- August 31, 2015 – Revised load capacity spec on page 4
- September 24, 2015 – Added Daily Cycle to specifications table on page 4
- March 2, 2016 – Removed copyright from cover page; Savaria Corporation back to Savaria Concord Lifts, Inc.
- June 15, 2016 – Revised electrical requirements on page 14
- January 25, 2017 – Added new code on page 3; Revised specs table on pages 4 and 5; Added new 3/4 & 4 safety rule and moved safety rules to pages 6 to 9
- February 9, 2017 – Added spec for distance between landings to specs table on page 4
- March 14, 2017 – Revisions throughout; page layout change for bi-fold door and small auto slim door cab plan views
- May 29, 2017 – Revised cab width in tables on pages 10 and 11 (cabs with panel-fold doors)
- March 14, 2018 – Revised pit depth to 8" on pages 4 and 27
- July 10, 2018 – Revised overhead for bi-fold doors to 96" on page 13
- August 1, 2018 – Revised forces on pages 4 and 30
- April 22, 2019 – Removed reference to "vanes" in drawings on pages 13 and 18
- June 26, 2019 - Added P/N for measuring tool on page 8
- July 12, 2019 - Revised overhead for auto slim doors to 100" (pages 4 and 18)
- October 9, 2019 - Revised specifications table on page 5
- November 22, 2019 - Revised specifications table on page 4 (pit depth requirement)
- December 31, 2019 - Revised drawings on pages 14, 15 and 16
- January 9, 2020 - Added note to temperature spec on page 4
- January 16, 2020 - Added outdoor hall call and Savaria Link to options in spec table on page 5; Added provisions by others - Savaria Link option on page 33
- May 5, 2020 - Revised Distance Between Floors spec on page 4
- May 12, 2020 - Added new spec "floor by others (in cab)" to specs table on page 4
- July 10, 2020 - Added 2019 code on page 2; Added plan views for bi-fold doors type 3 and 4 on page 17
- August 11, 2020 - Revised max travel spec on page 4
- August 20, 2020 - Revised noise spec on page 4
- August 21, 2020 - Revised tables on pages 10 and 11
- September 1, 2020 - Removed 3 8.5 rule
- October 20, 2020 - Added flush wood door instructions on pages 33through 36
- November 19, 2020 - Updated specifications on page 4
- January 25, 2021 - Revised wall configuration dimension on page 28
- February 2, 2021 - Corrected conversion and added new overhead clearance dimension on page 5
- August 24, 2021 - Updated controller box dimensions on page 32
- September 2, 2021 - Updated Plan views
- August 2 2022 - Updated cover

Eclipse specifications

Specification type	Specification data
Load capacity	Standard 750 lbs. (341 kg), 950 lbs. (431 kg), and 1000 lbs. (454 kg)
Component weights	367 lbs. - sling and base rail section 170 lbs. - middle rail Variable weight - top rail/bed plate 600 lbs. - control wall stack (variable) 440 to 660 lbs. cab (+ 263 lbs. speedy sling) 100 lbs. motor drive 50 lbs. controller 2 lbs. per foot chain (two runs)
Rail forces	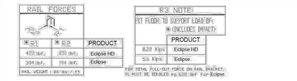
Rated speed	40 fpm (0.20 mps) standard.
Power supply (circuit by others)	230 volt, single phase, 60 Hz, 30-Amp fused disconnect box with 20-Amp fuse
Lighting supply (circuit by others)	120 volt, 60 Hz, 2 amps (consumption)
Drive system	Automatic 2HP-geared roller chain variable frequency drive, complete with counterweight
Distance between floors	7" (178 mm) minimum (floors 1 to 2, 3 to 4, 5 to 6) 11" (279 mm) minimum (floors 2 to 3, 4 to 5)
Temperature operating range (environment)	- 10°C to + 40°C / 14°F to 104°F **NOTE**: For optimal running conditions, each landing of the unit should be in a climate-controlled environment.
Noise level	60 dBA to 63 dBA Measured 10" (254 mm) away from COP at top landing
Daily cycle	Normal: 40 Heavy: 80 Excessive: 150 Maximum starts in 1 hour on standard installation: 20 NOTE: Please consult your Sales Representative if there a chance you may exceed these amounts.
Cab size	• W36" x L48" x H80" (914 mm x 1219 mm x 2032 mm), Type 1, 2, 3, 4, 5 • W36" x L54" x H80" (914 mm x 1371 mm x 2032 mm), Type 1, 2, 3, 4, 5 • W36" x L60" x H80" (914 mm x 1524 mm x 2032 mm), Type 1, 2, 3, 4, 5 • W40" x L54" x H80" (1067mm x 1371 mm x2032 mm), Type 1, 2, 3, 4, 5
Floor by others (in cab)	3/4" (19 mm) maximum
Cab panel and finish	Solid melamine or MDF panels (standard), unfinished oak veneer panels (optional), finished recessed veneer panels (optional), solid hardwood raised panels (optional)
Maximum travel	50 ft (15.24 m); 60 ft (18.29 m) where a variance is possible
Control system	Relay logic controller complete with diagnostic LEDs
Levels and openings	Up to 6 stops / up to 2 cab openings
Pit depth requirement	Eclipse: 8" (152 mm) minimum Eclipse HD: 10" (254 mm) minimum Optional: with buffer springs - plus 3" (76 mm); with steel cab - plus 1.5" (38 mm)

Eclipse specifications (continued)

Specification type	Specification data
Minimum overhead clearance	96" (2438 mm) for standard 80" cab 100" (2540 mm) for 84" cab 112" (2845 mm) for 96" cab 100" (2540 mm) for 84" cab with auto slim doors 112" (2845 mm) for 96" cab with auto slim doors
Hall station and control panel finish	• Clear or bronze anodized aluminum (standard), or stainless steel (optional), or brass (optional), or architect white (optional) • Rectangular (standard) or oval (optional) hall stations, keyless (standard) or keyed (optional)
Standard features	• Automatic cab on/off lighting • Recessed gate pocket • Digital display in car operating panel • Clear or bronze anodized aluminum cab entrance trim and handrail • Data plates, capacity tags • Proximity floor selection, stopping and two-way levelling • Motor access cover (locked and switched) • Home landing feature • Plan drawings • Modular rail sections • Unfinished plywood sub-floor • White ceiling with four LED lights • MDF cab with or without finish, melamine cab in choice of finishes • Stainless steel, clear or bronze anodized aluminum cab operating panel and hall call stations
Safety features	• Cab gate safety switch • Pit run/stop switch and car top run/stop switch • Emergency stop and alarm buttons • Uninterruptible power supply (UPS)/battery back-up system for lowering, automatic gate operation (if equipped), and electrical interlock operation and lighting in the event of a power failure • Upper and lower terminal limits • Final limit switch • Mechanical rail shoring blocks • Sling: factory pre-assembled speedy sling c/w pre-set slack chain safety brake and switch
Options	• Custom cab size • 96" (2438 mm) high cab; 84" (2133 mm) high cab • Rated speed - (50 fpm (0.250 mps) available where code permits) • Accordion car gate (choice of style) • Automatic gate operator • Bi-fold doors • Automatic swing landing door operator • Buffer springs (11" pit depth minimum) • Interlocks for doors by others and Savaria landing doors (fire rated door or wood door) • Keyed on/off control panel and hall stations • Optional cab finishes: raised hardwood, unfinished veneer • Optional fixture finishes: brass #4 finish or blackened stainless steel (handrail, cab operating panel, hall call stations); hall call stations available in rectangular or oval • Telephone cabinet to match trim • Automatic slim doors • Digital position indicator (PI) in hall calls • Surface mount hall call for outdoor use • Savaria Link remote monitoring

Safety first – 3/4 & 4 rule

The ASME A17.1-2016/CSA B44-16 Safety Code for Elevators and Escalators **(2016 AND AFTER)** mandates the following maximum hoistway door clearances (see drawing on next page):

- Clearance between the hoistway side of the landing door and the edge of the landing sill shall not exceed 0.75" (19 mm) for swing doors (shown below) and 2.25" (57 mm) for sliding doors.
- Distance between the hoistway side of the landing door or gate and the car door or gate shall not exceed 4" (102 mm). *A measuring tool for this is shown below.*
- Eclipse Residential Elevator design is with a maximum 1.25" (32 mm) running clearance.

NOTE: Concrete block/masonry shafts and some commercial metal door frames often create 3/4 & 4 rule violations.

Recommendation: We recommend installation of a solid door as hollow doors do not respect the pull-out force required by code for the door locks.

IMPORTANT

- If the landing door has a pattern on the hoistway side, measure the 3/4" setback from the deeper part of the door to the landing sill.
- For accordion (panel fold) gates, you MUST have flush doors (not the 3/4" setback).
- 3/4" setback is possible only when the car doors are bi-fold or slim doors.

Measuring tool for accordion car gate and landing door (3/4 & 4 rule)



Measuring Tool P/N 301803

With the measuring tool pressed into the "V" of the accordion car gate, the hoistway side of the landing door must not be more than 4" (102 mm) as shown.

3/4 & 4 rule

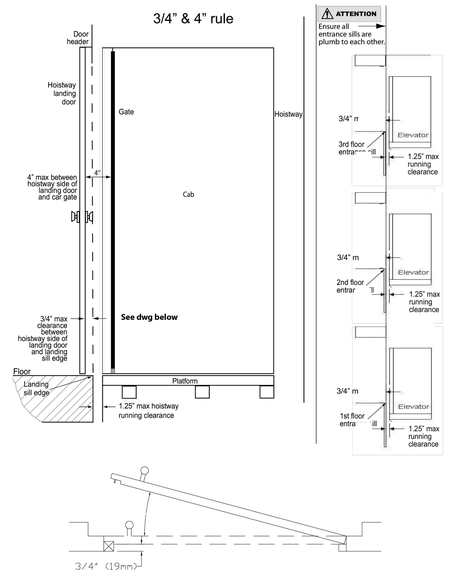

Eclipse with panel-fold doors

Note: All measurements in inches (").

Type 1L (panel-fold doors)

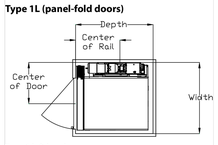

Type 1 left hand

Cab size	Width	Depth	Center of rail	Center of door
36 x 48	50 1/4	55	31*	29 1/4
36 x 54	50 1/4	61	33	29 1/4
36 x 60	50 1/4	67	36	29 1/4
40 x 54	54 1/4	61	33	33 1/4

Note: * 30" if right hand motor

Type 1R (panel-fold doors)

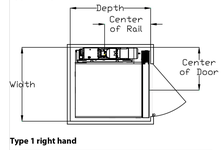

Type 1 right hand

Cab size	Width	Depth	Center of rail	Center of door
36 x 48	50 1/4	55	31*	29 1/4
36 x 54	50 1/4	61	33	29 1/4
36 x 60	50 1/4	67	36	29 1/4
40 x 54	54 1/4	61	33	33 1/4

Note: * 30" if left hand motor

Type 2 (panel-fold doors)

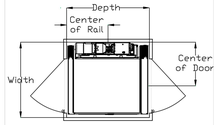

Type 2

Cab size	Width	Depth	Center of rail	Center of door
36 x 48	50 1/4	55 1/4	27 1/4	29 1/4
36 x 54	50 1/4	61 1/4	30 1/4	29 1/4
36 x 60	50 1/4	67 1/4	33 1/4	29 1/4
40 x 54	54 1/4	61 1/4	30 1/4	33 1/4

Type 3 (panel-fold doors)

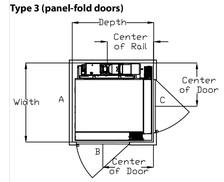

Type 3

Cab size	Width	Depth	Center of rail	Center of door C	Center of door B
36 x 48	52 3/4	55	31	27 1/4	34 1/4
36 x 54	52 3/4	61	33	27 1/4	38 1/4
36 x 60	52 3/4	67	36	27 1/4	46 1/4
40 x 54	56 3/4	61	33	31 1/4	38 1/4

IMPORTANT: Measurements in the above tables are only valid for the cab and hoistway sizes listed. For non-standard cab and/or hoistway sizes, always refer to your plan drawings.

RF ARCHITECTURE
PH: (253) 359-4039
RICHARD@RFARCHITECTURE.COM
7421 214TH AVE E BONNEYLAKE, WA 98391

6080
REGISTERED ARCHITECT
RICHARD W. FLAKE
STATE OF WASHINGTON

All drawings, specifications, plans, ideas, arrangements, and designs represented or referred to are the property of and owned by Richard Flake Architect in whether the project for which they are made is executed or not. They were created, evolved, developed and produced for sole use on and in connection with this project and none of the above may be disclosed or given to or used by any person, firm, or corporation for any use or purpose whatsoever including any other project, except upon written permission of Richard Flake Architect.

Copyright 2023
Richard Flake Architect

RESIDENCE
MURRAY RESIDENCE
NEW SINGLE FAMILY RESIDENCE
AVON 9804

DESIGN: RWF
DRAWN: HAVILAND CONSULTING
CHECKED: RWF
REVISIONS:
PER CITY REVIEW 10-22-2021 REVISIONS
PER CITY REVIEW 8-8-2023 REVISIONS

September 15, 2023

ELEV-4

Type 4 (panel-fold doors)

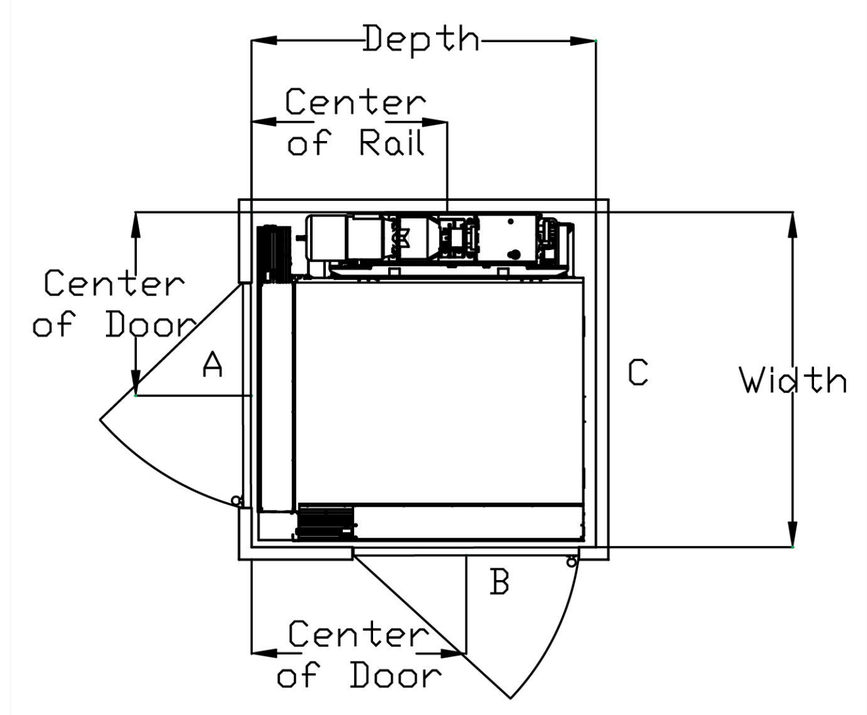

Type 4

Cab size	Width	Depth	Center of rail	Center of door A	Center of door B
36 x 48	52 5/8	55	31	27 7/8	34 1/4
36 x 54	52 5/8	61	33	27 7/8	38 3/4
36 x 60	52 5/8	67	36	27 7/8	46 1/4
40 x 54	56 5/8	61	33	31 7/8	38 3/4

Type 5 center (panel-fold doors)

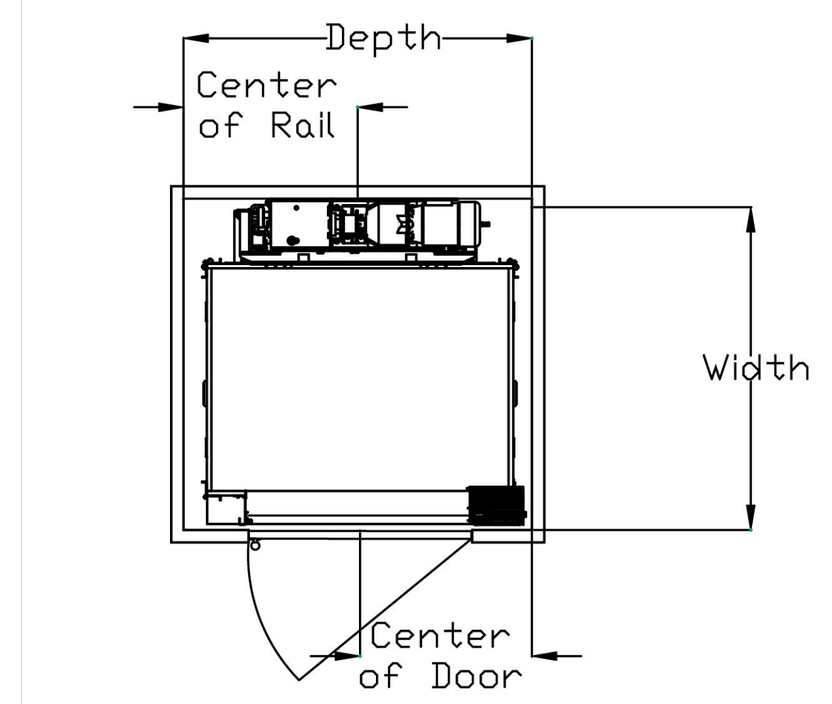

Type 5 center

Cab size	Width	Depth	Center of rail	Center of door
36 x 48	52 5/8	56 1/4	28 1/8	29
36 x 54	52 5/8	62 1/4	31 1/8	29
36 x 60	52 5/8	68 1/4	34 1/8	34 5/8
40 x 54	56 5/8	62 1/4	31 1/8	29

Type 5L (panel-fold doors)

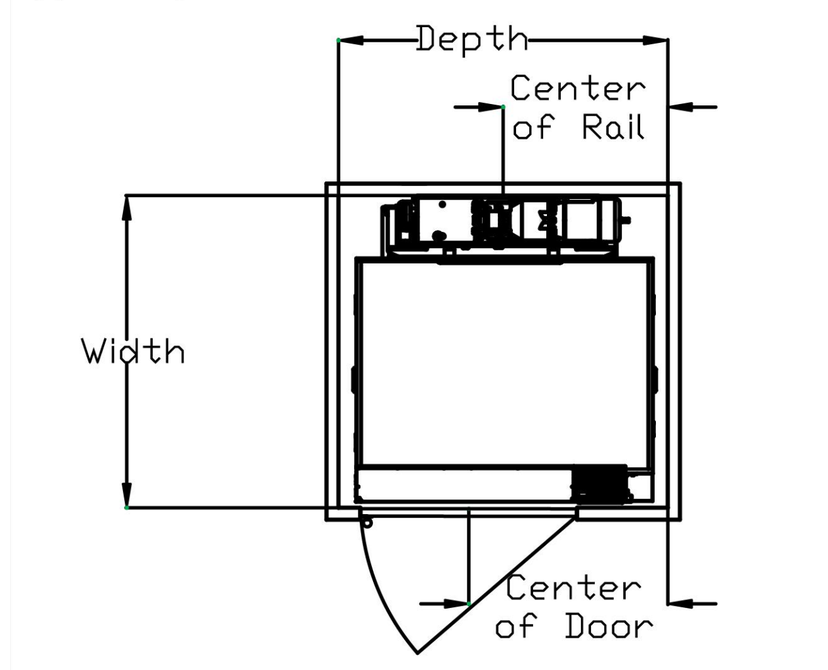

Type 5: left hand

Cab size	Width	Depth	Center of rail	Center of door
36 x 48	52 5/8	55	27 1/2	33 1/4
36 x 54	52 5/8	61	30 1/2	39 1/4
36 x 60	52 5/8	67	33 1/2	45 1/4
40 x 54	56 5/8	61	30 1/2	39 1/4

Type 5R (panel-fold doors)

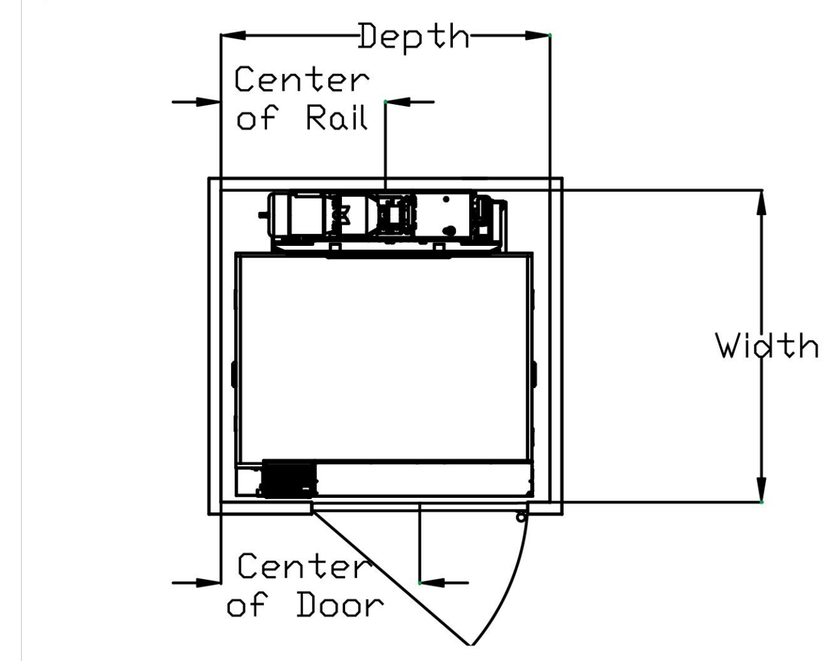

Type 5: right hand

Cab size	Width	Depth	Center of rail	Center of door
36 x 48	52 5/8	55	27 1/2	33 1/4
36 x 54	52 5/8	61	30 1/2	39 1/4
36 x 60	52 5/8	67	33 1/2	45 1/4
40 x 54	56 5/8	61	30 1/2	39 1/4

IMPORTANT: Measurements in the above tables are only valid for the cab and hoistway sizes listed. For non-standard cab and/or hoistway sizes, always refer to your plan drawings.

Eclipse with bi-fold doors

Bi-fold doors entrance assembly

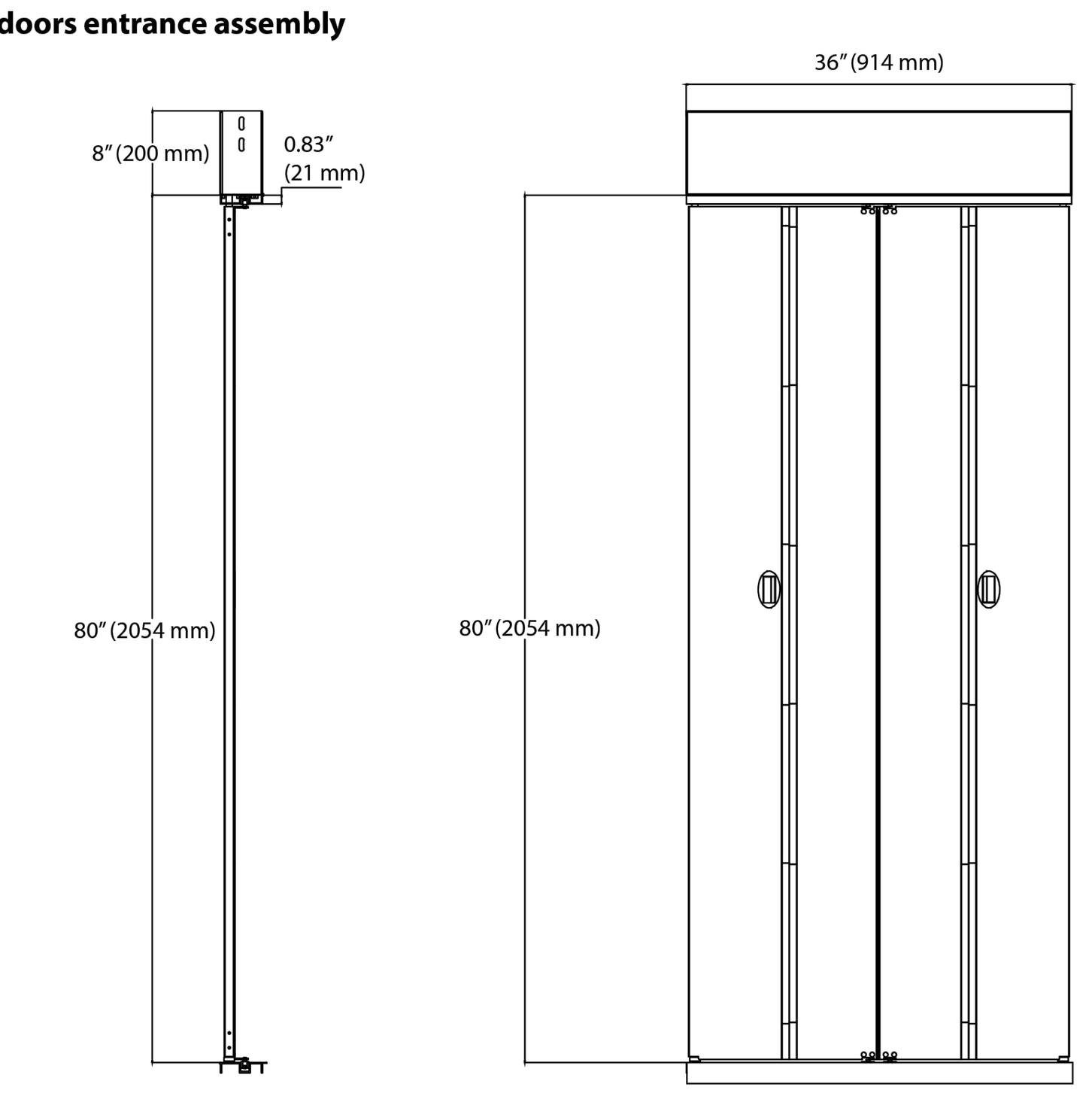

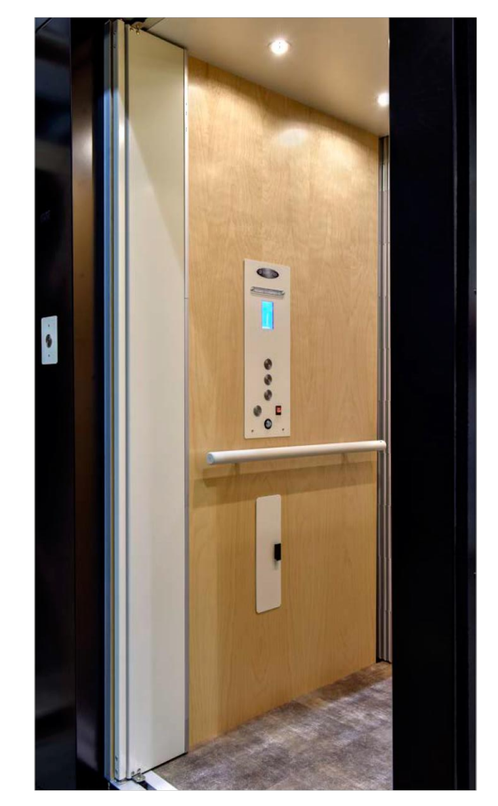

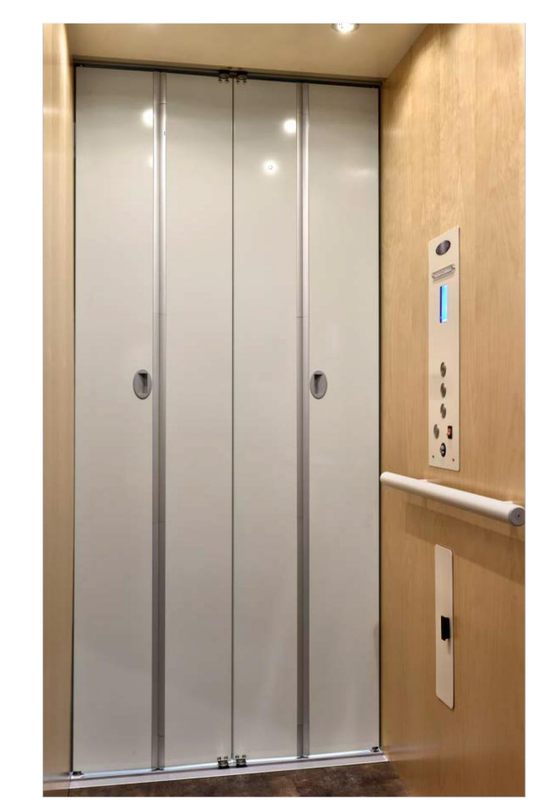

NOTE: ***Bi-fold doors available in size 36"x80", white and stainless. Not available for 90 degrees.***

Sample elevation view – bi-fold doors (Type 1L shown)

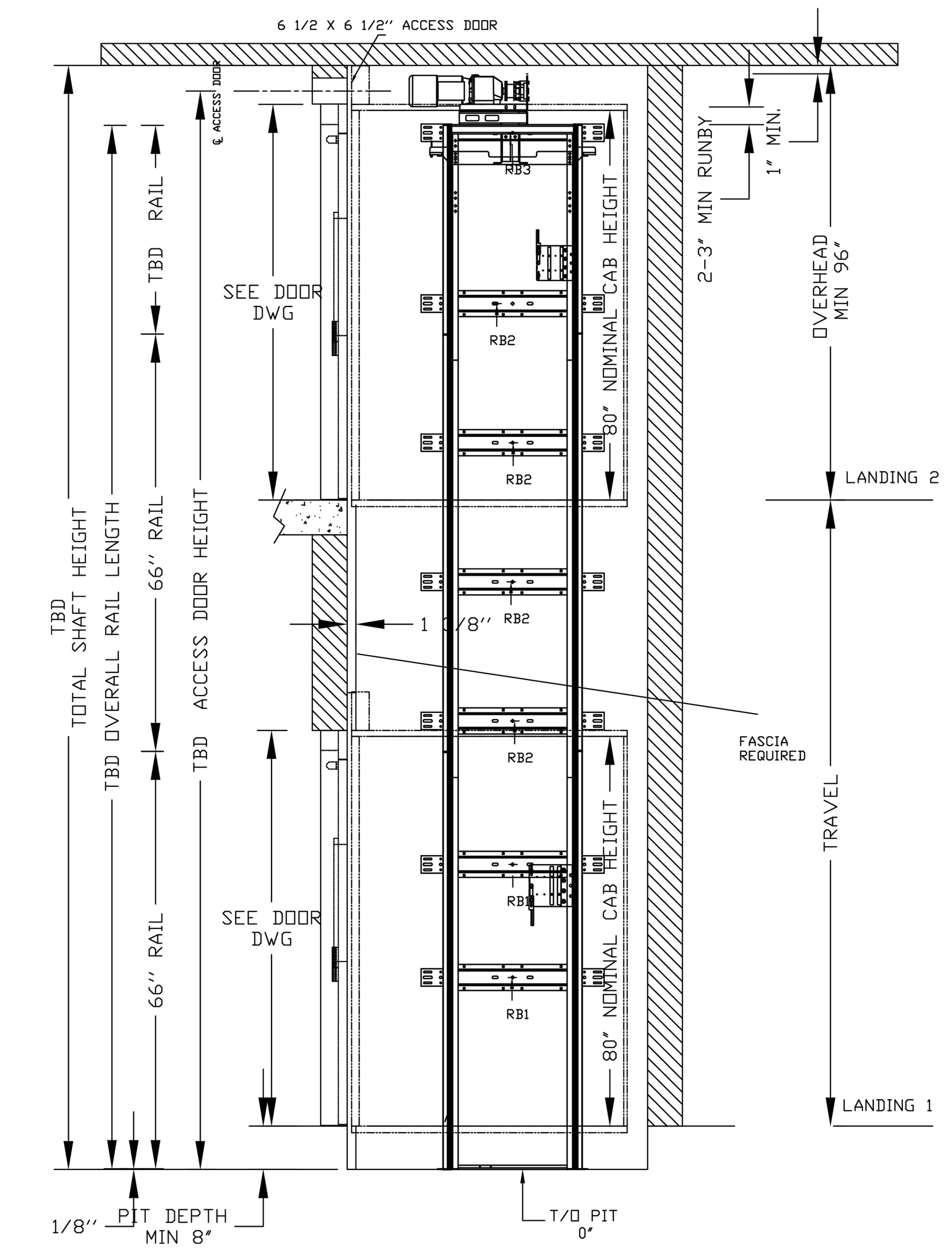

Type 1L (bi-fold doors) - 36" cab width

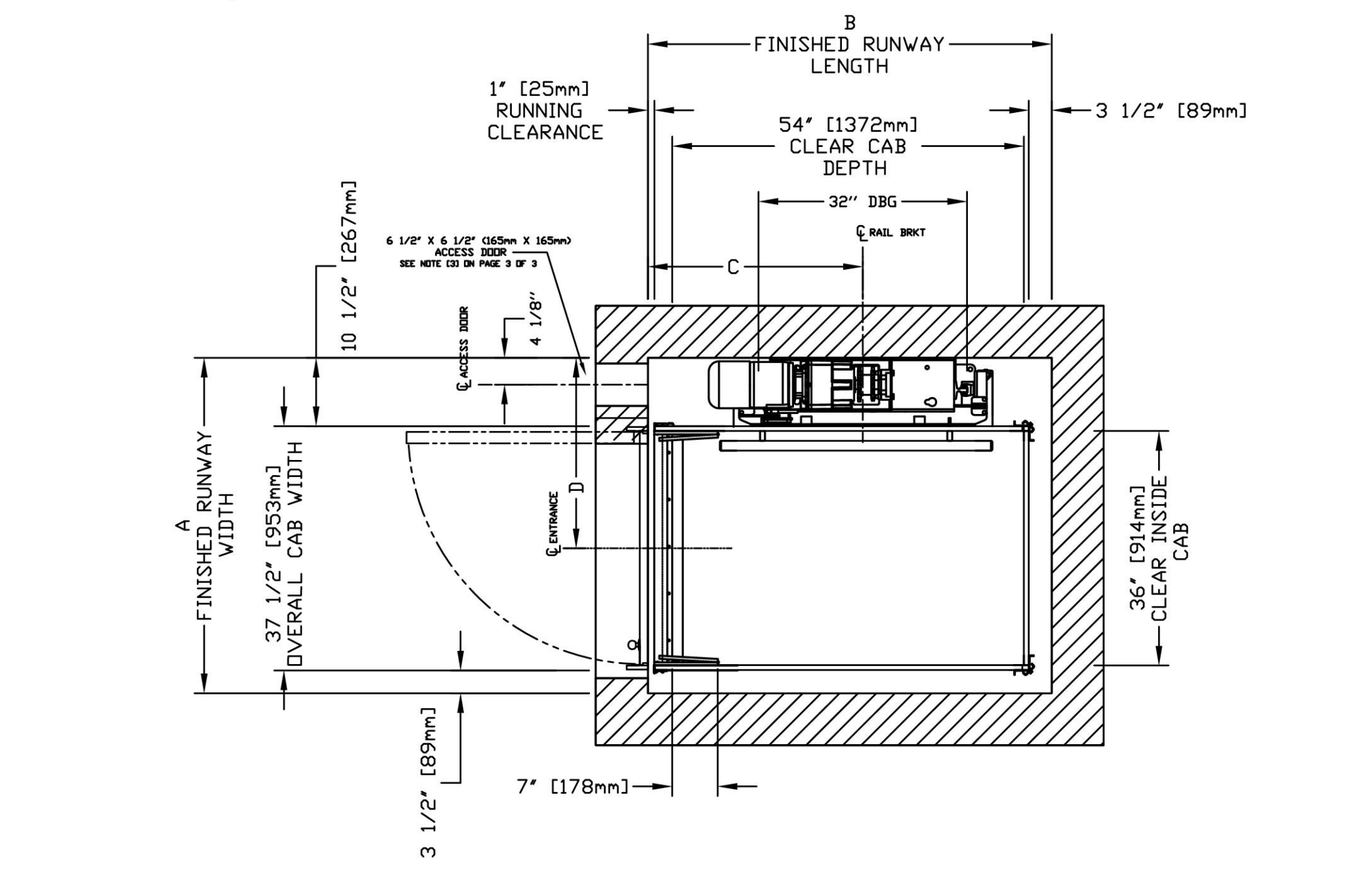

CLEAR INSIDE CAB WIDTH		CLEAR INSIDE CAB LENGTH		A FINISHED RUNWAY WIDTH		B FINISHED RUNWAY LENGTH		C RAIL CENTER LINE		D DOOR CENTER LINE	
mm	Inches	mm		mm	Inches	mm	Inches	mm	Inches	mm	Inches
914	36	1219	48	1308	51 1/2	1422	56	762	30	743	29 1/4
914	36	1372	54	1308	51 1/2	1575	62	838	33	743	29 1/4
914	36	1499	59	1308	51 1/2	1702	67	914	36	743	29 1/4

Type 1L (bi-fold doors) - 40" cab width

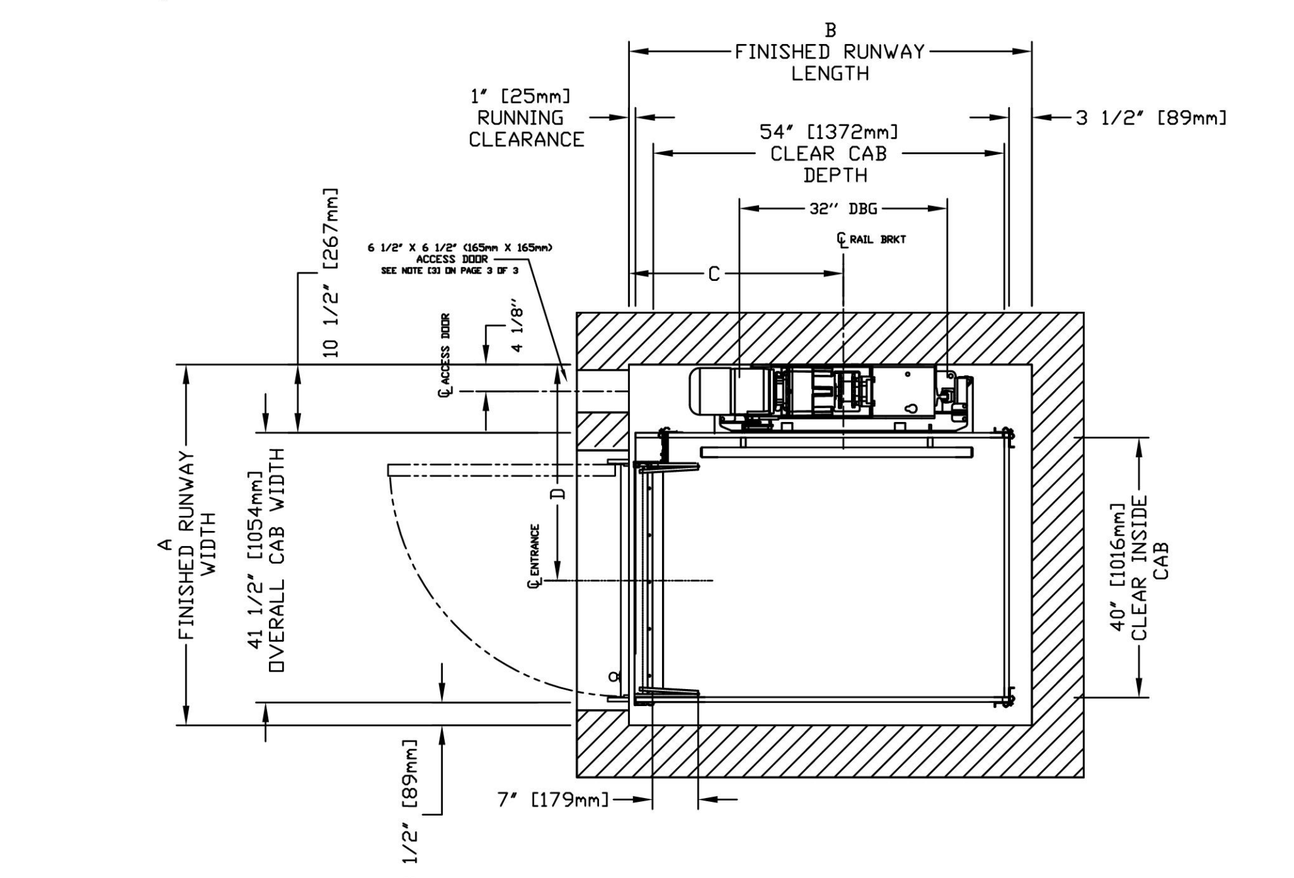

CLEAR INSIDE CAB WIDTH		CLEAR INSIDE CAB LENGTH		A FINISHED RUNWAY WIDTH		B FINISHED RUNWAY LENGTH		C RAIL CENTER LINE		D DOOR CENTER LINE	
mm	Inches	mm		mm	Inches	mm	Inches	mm	Inches	mm	Inches
1016	40	1219	48	1410	55 1/2	1422	56	762	30	845	33 1/4
1016	40	1372	54	1410	55 1/2	1575	62	838	33	845	33 1/4
1016	40	1499	59	1410	55 1/2	1702	67	914	36	845	33 1/4

Type 1R (bi-fold doors) - 36" cab width

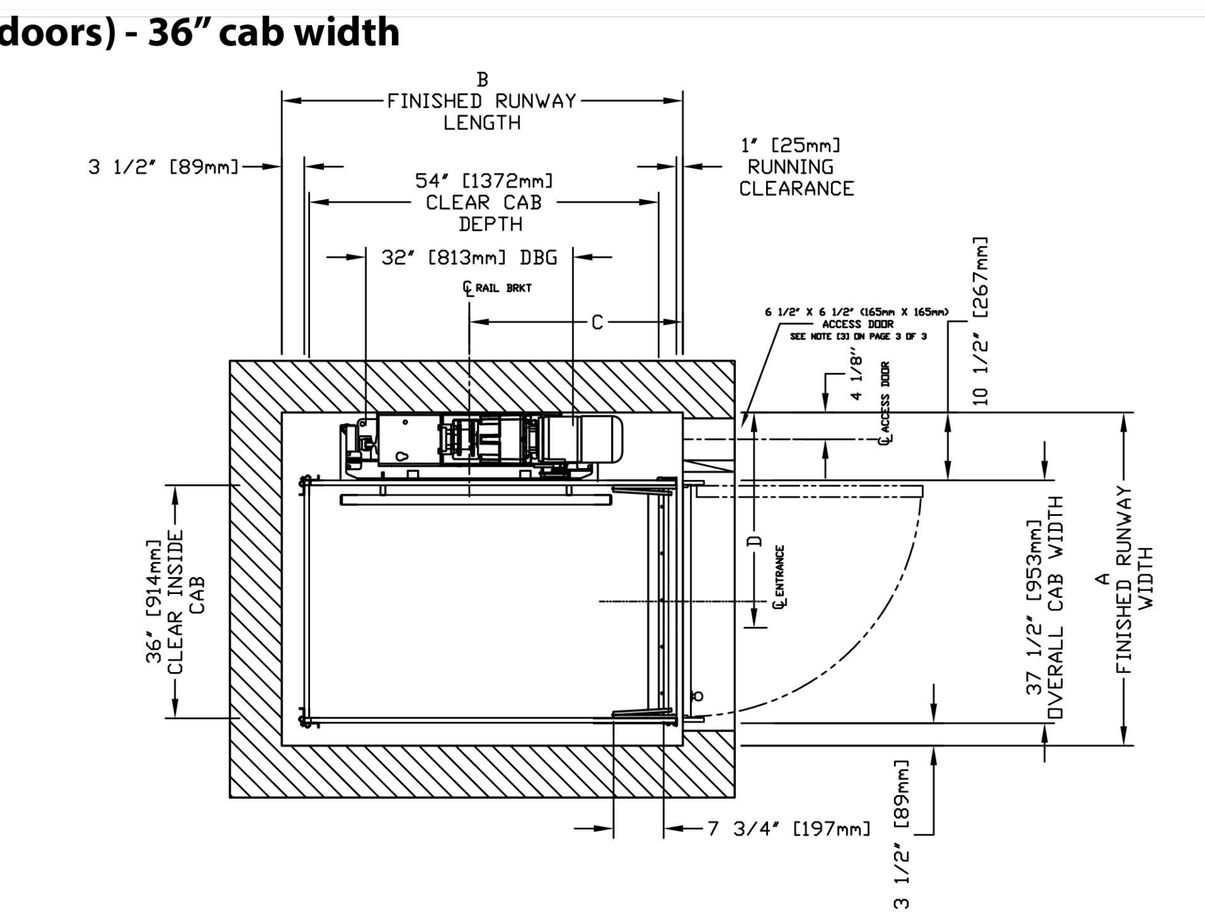

CLEAR INSIDE CAB WIDTH		CLEAR INSIDE CAB LENGTH		A FINISHED RUNWAY WIDTH		B FINISHED RUNWAY LENGTH		C RAIL CENTER LINE		D DOOR CENTER LINE	
mm	Inches	mm		mm	Inches	mm	Inches	mm	Inches	mm	Inches
914	36	1219	48	1308	51 1/2	1422	56	762	30	743	29 1/4
914	36	1372	54	1308	51 1/2	1575	62	838	33	743	29 1/4
914	36	1499	59	1308	51 1/2	1702	67	914	36	743	29 1/4

Type 1R (bi-fold doors) - 40" cab width

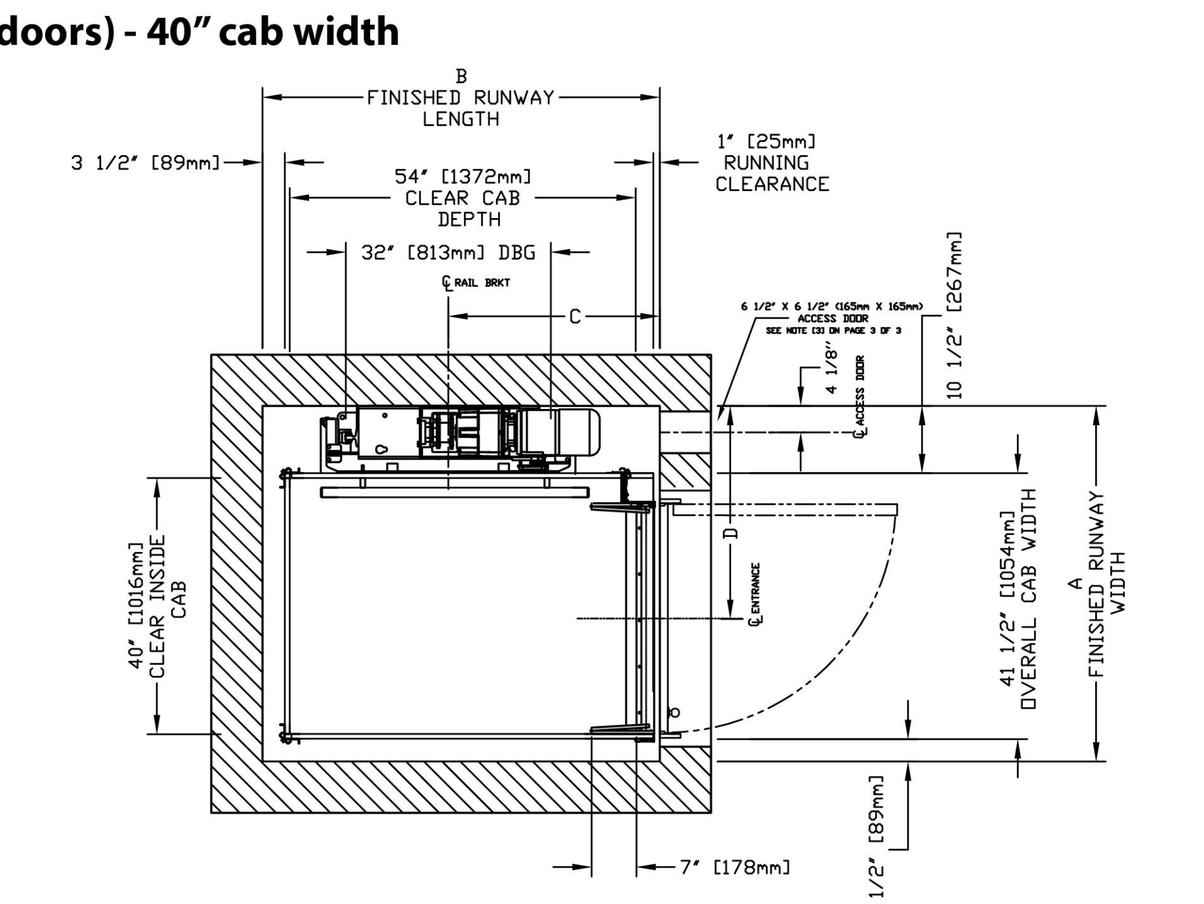

CLEAR INSIDE CAB WIDTH		CLEAR INSIDE CAB LENGTH		A FINISHED RUNWAY WIDTH		B FINISHED RUNWAY LENGTH		C RAIL CENTER LINE		D DOOR CENTER LINE	
mm	Inches	mm		mm	Inches	mm	Inches	mm	Inches	mm	Inches
1016	40	1219	48	1410	55 1/2	1422	56	762	30	845	33 1/4
1016	40	1372	54	1410	55 1/2	1575	62	838	33	845	33 1/4
1016	40	1499	59	1410	55 1/2	1702	67	914	36	845	33 1/4

Type 2 (bi-fold doors) - 36" cab width

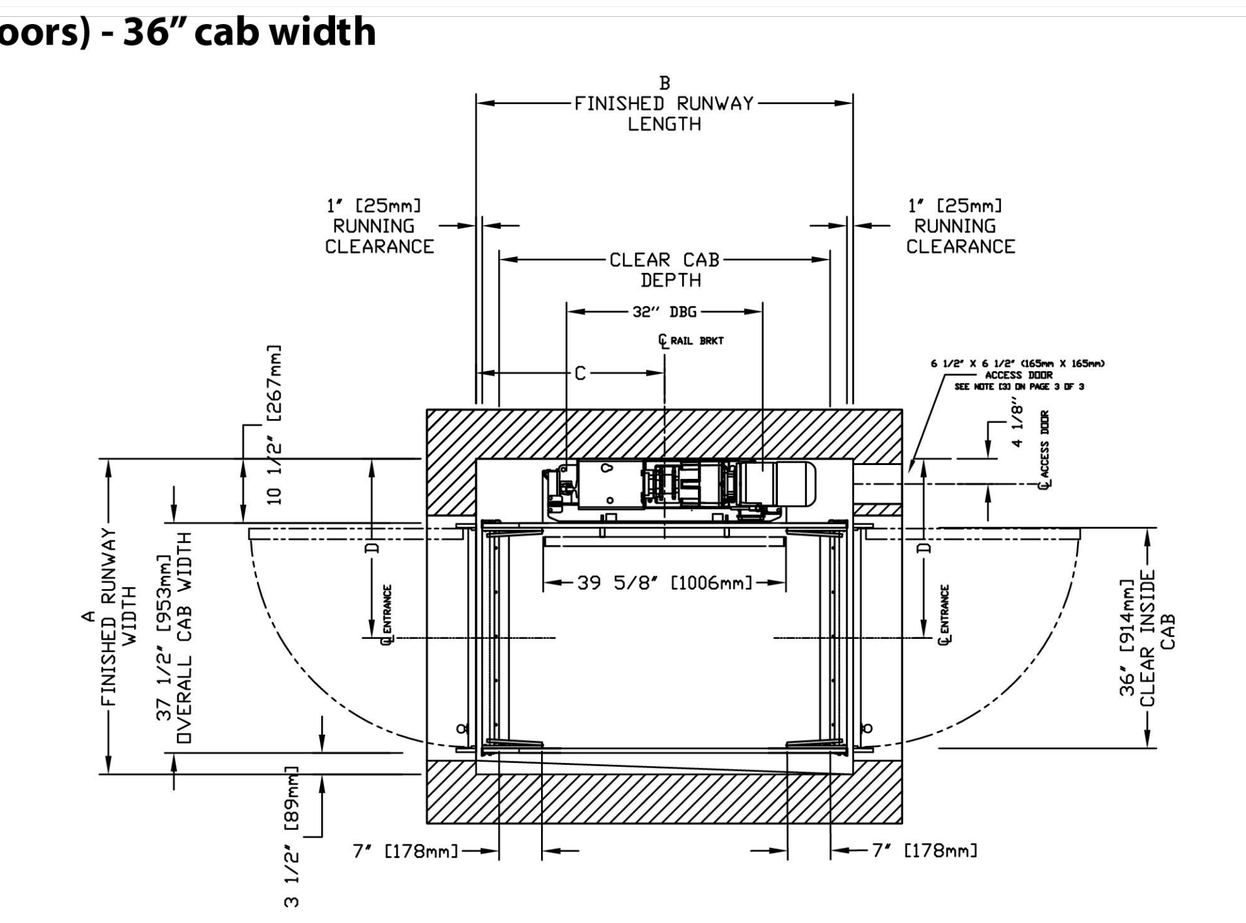

CLEAR INSIDE CAB WIDTH		CLEAR INSIDE CAB LENGTH		A FINISHED RUNWAY WIDTH		B FINISHED RUNWAY LENGTH		C RAIL CENTER LINE		D DOOR CENTER LINE	
mm	Inches	mm		mm	Inches	mm	Inches	mm	Inches	mm	Inches
914	36	1219	48	1308	51 1/2	1410	55 1/2	705	27 3/4	743	29 1/4
914	36	1372	54	1308	51 1/2	1562	61 1/2	781	30 3/4	743	29 1/4
914	36	1499	59	1308	51 1/2	1689	66 1/2	845	33 1/4	743	29 1/4

Type 2 (bi-fold doors) - 40" cab width

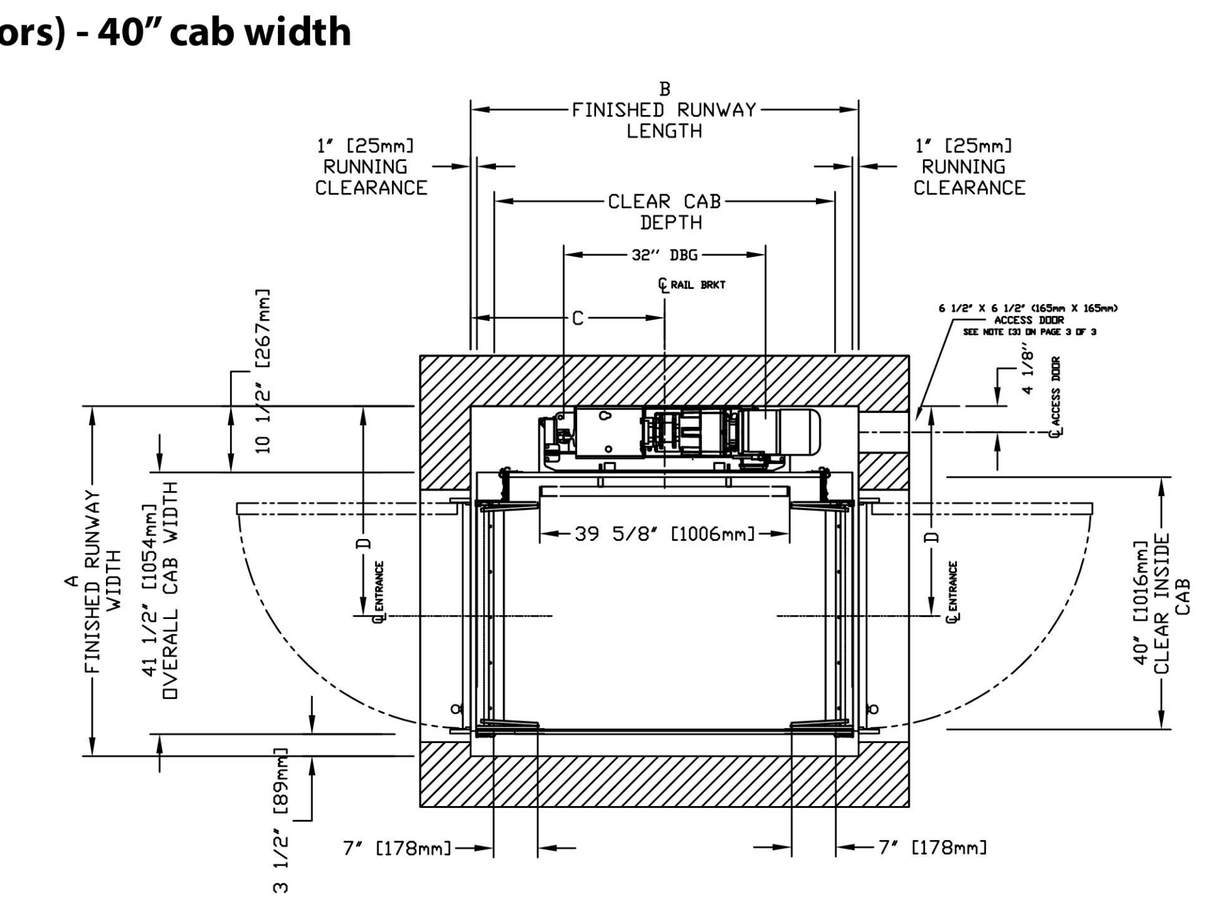

CLEAR INSIDE CAB WIDTH		CLEAR INSIDE CAB LENGTH		A FINISHED RUNWAY WIDTH		B FINISHED RUNWAY LENGTH		C RAIL CENTER LINE		D DOOR CENTER LINE	
mm	Inches	mm		mm	Inches	mm	Inches	mm	Inches	mm	Inches
1016	40	1219	48	1410	55 1/2	1410	55 1/2	705	27 3/4	845	33 1/4
1016	40	1372	54	1410	55 1/2	1562	61 1/2	781	30 3/4	845	33 1/4
1016	40	1499	59	1410	55 1/2	1689	66 1/2	845	33 1/4	845	33 1/4

Type 3(bi-fold doors) - 36" cab width

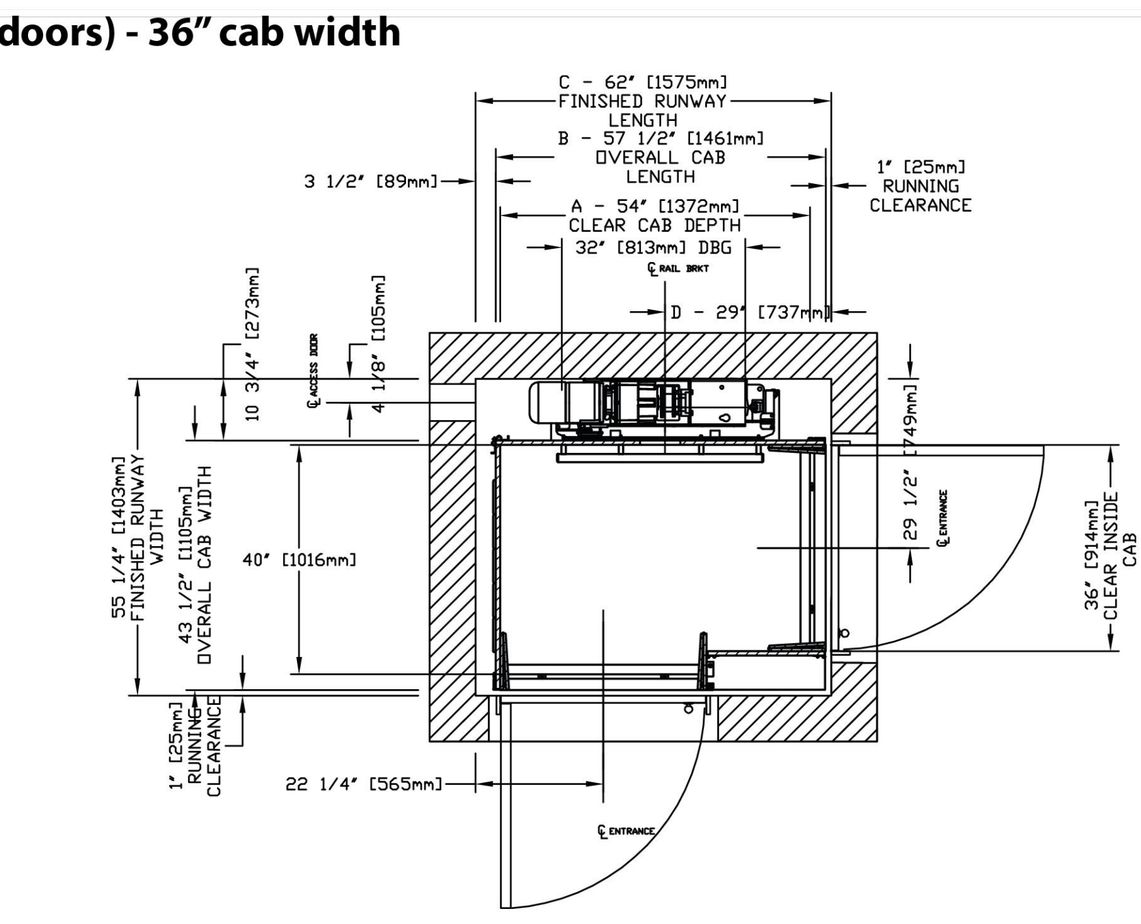

A CLEAR INSIDE CAB LENGTH		B OVERALL CAB LENGTH		C FINISHED RUNWAY LENGTH		D RAIL CENTER LINE	
mm	Inches	mm	Inches	mm	Inches	mm	Inches
1219	48	1308	51 1/2	1422	56	660	26
1372	54	1461	57 1/2	1575	62	737	29
1524	60	1613	63 1/2	1727	68	864	34

Type 4(bi-fold doors) - 36" cab width

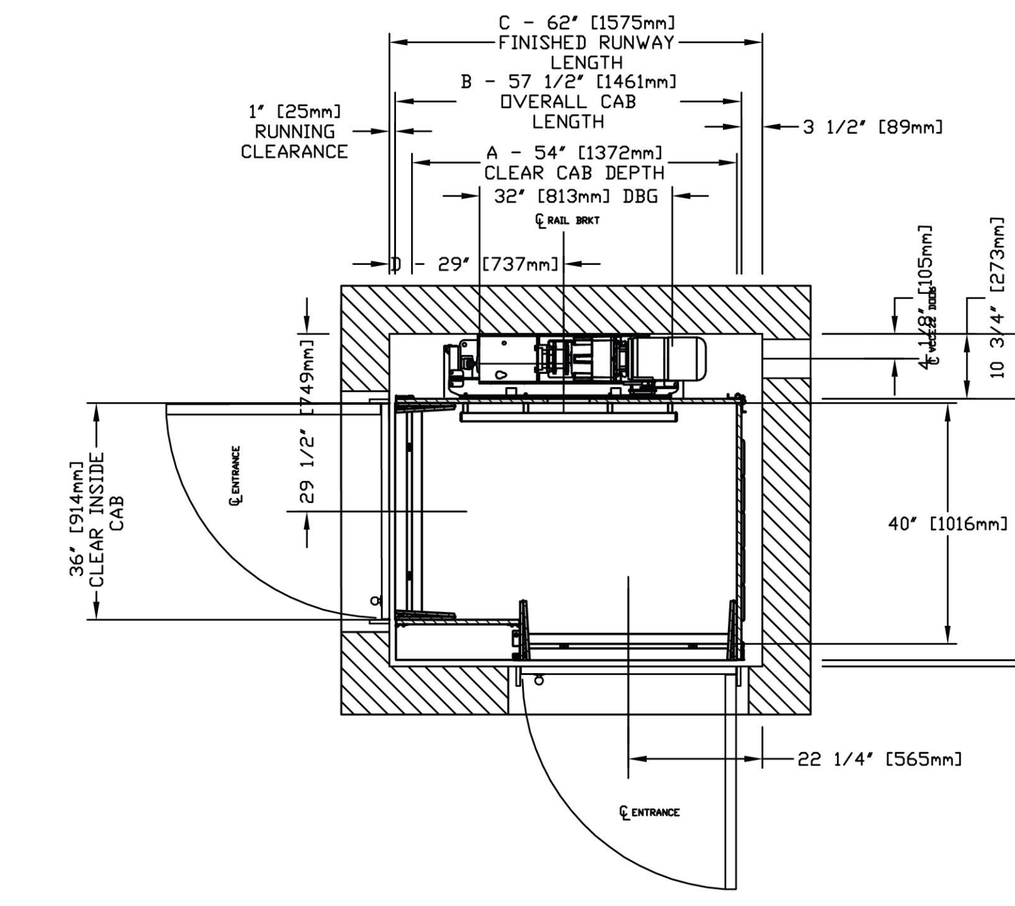

A CLEAR INSIDE CAB LENGTH		B OVERALL CAB LENGTH		C FINISHED RUNWAY LENGTH		D RAIL CENTER LINE	
mm	Inches	mm	Inches	mm	Inches	mm	Inches
1219	48	1308	51 1/2	1422	56	660	26
1372	54	1461	57 1/2	1575	62	737	29
1524	60	1613	63 1/2	1727	68	864	34

Eclipse with auto slim doors (35.5" opening)

Auto slim doors entrance assembly, CO = 2100

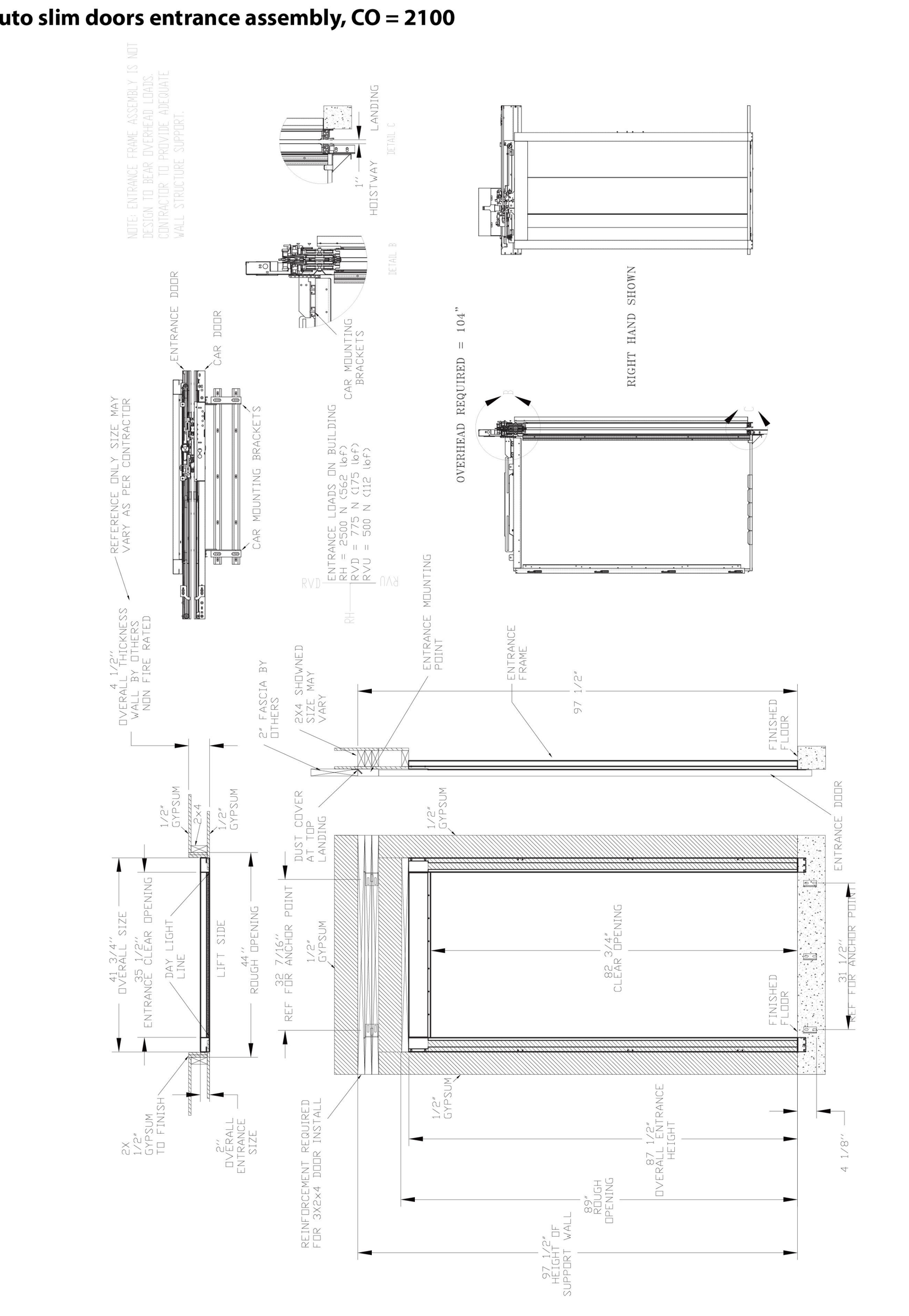

RF ARCHITECTURE

PH: (253) 359-4039
RICHARD@RFARCHITECTURE.COM
7421 214TH AVE E BONNEYLAKE, WA 98391

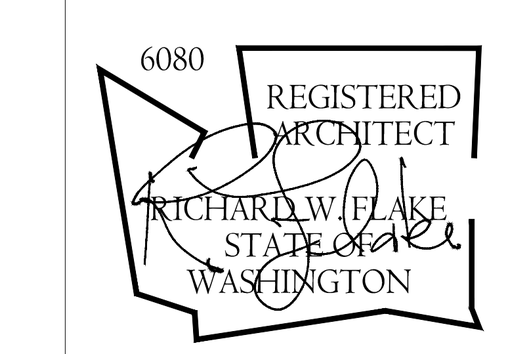

All drawings, specifications, plans, ideas, arrangements, and designs represented or referred to are the property of and owned by Richard Flake Architect in whether the project for which they are made is executed or not. They were created, evolved, developed and produced for sole use on and in connection with this project and none of the above may be disclosed or given to or used by any person, firm, or corporation for any use or purpose whatsoever including any other project, except upon written permission of Richard Flake Architect.

Copyright 2023
Richard Flake Architect

MURRAY RESIDENCE

NEW SINGLE FAMILY RESIDENCE
4803 FOREST AVE SE
MERCER ISLAND, WA 98040

DESIGN: RWF

DRAWN:

HAVILAND CONSULTING

CHECKED: RWF

REVISIONS:

1 PER CITY REVIEW 10-22-2021 REVISIONS

2 PER CITY REVIEW 8-8-2023 REVISIONS

September 15, 2023

ELEV-5

Sample elevation view – auto slim doors (Type 1L shown)

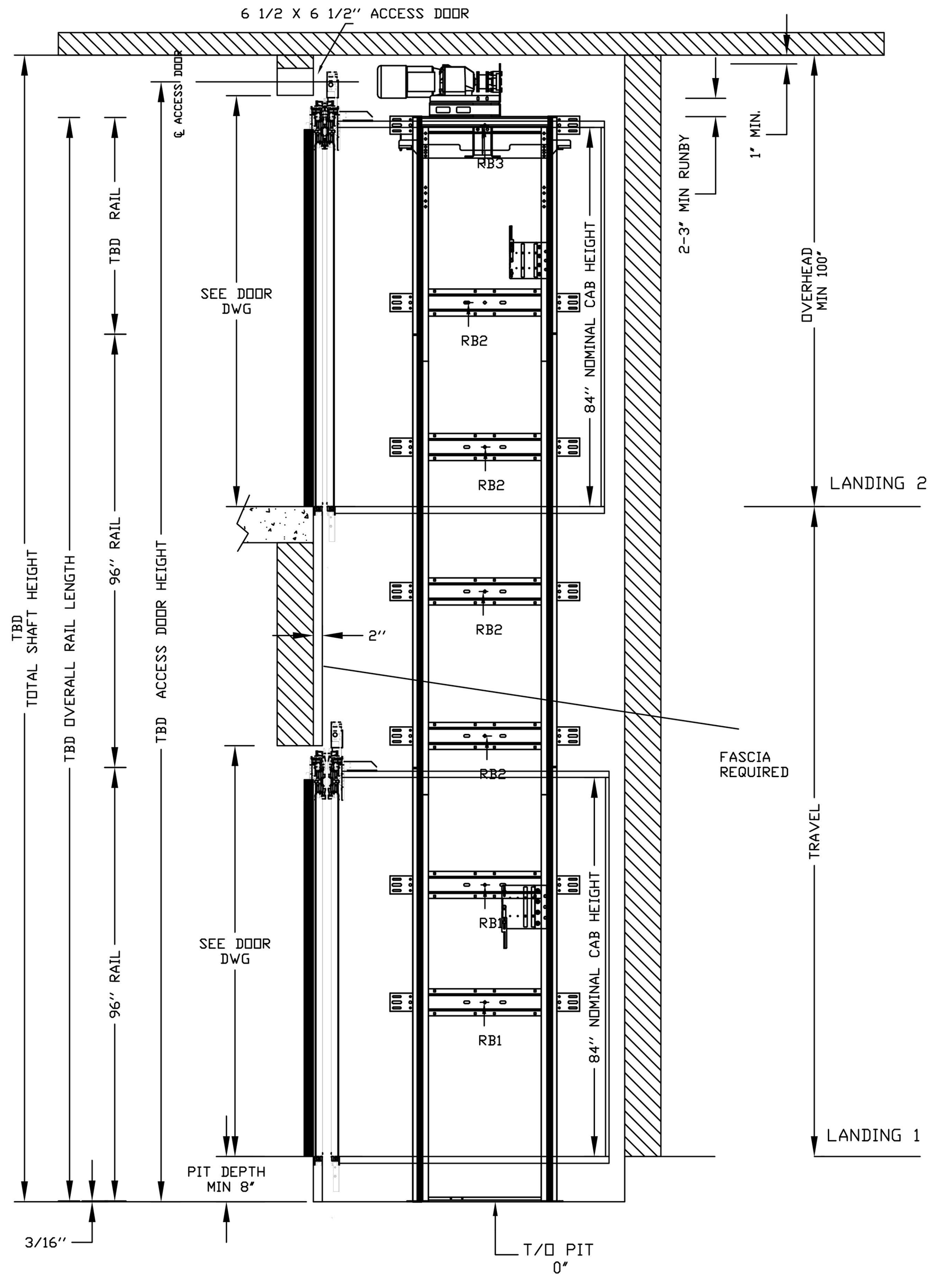

Type 1L (auto slim doors) - 35.5" opening

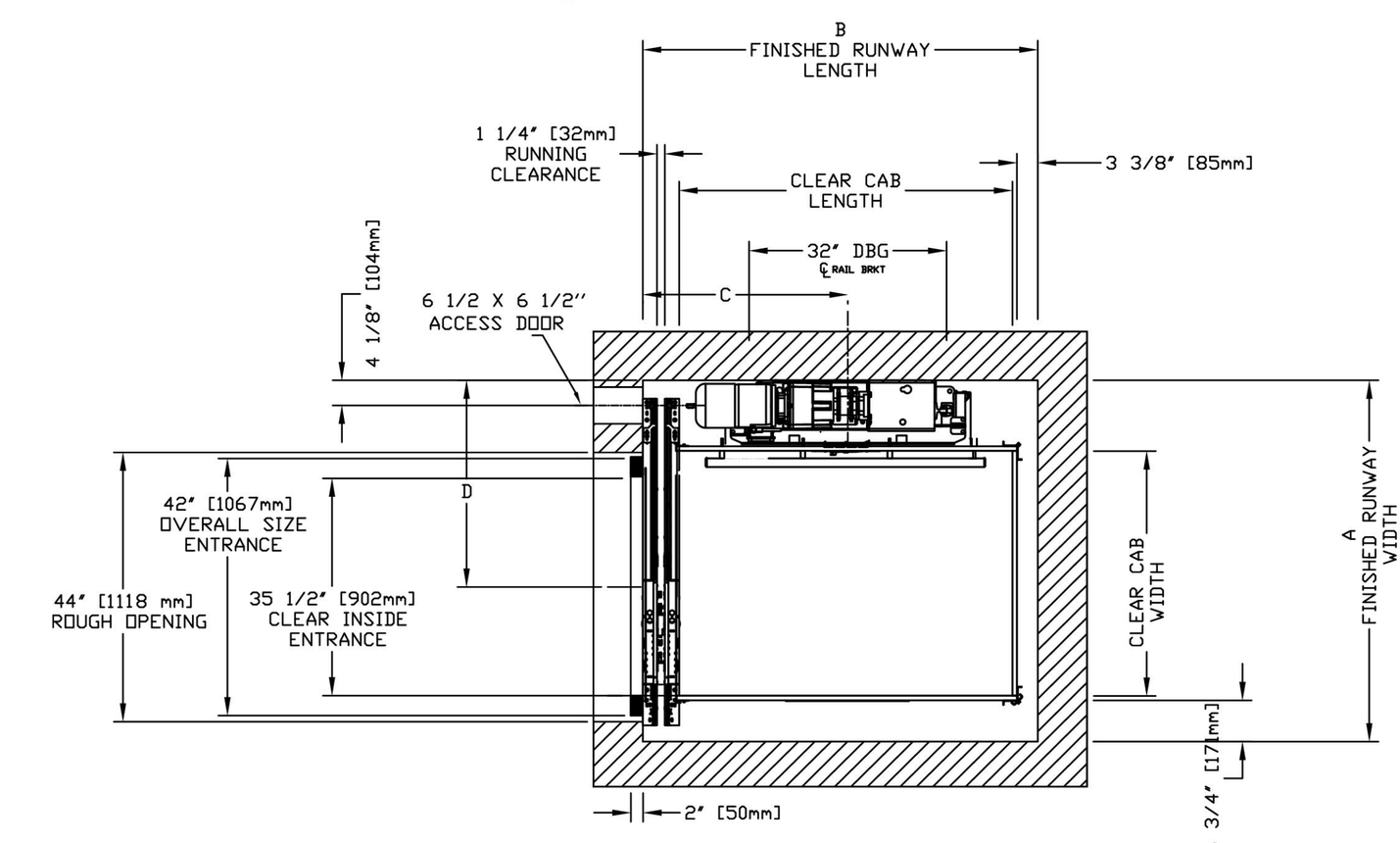

CLEAR INSIDE CAB WIDTH		CLEAR INSIDE CAB LENGTH		A FINISHED RUNWAY WIDTH		B FINISHED RUNWAY LENGTH		C RAIL CENTER LINE		D DOOR CENTER LINE	
mm	Inches	mm	Inches	mm	Inches	mm	Inches	mm	Inches	mm	Inches
914	36	1219	48	1499	59	1473	58	794	31 1/4	838	33
914	36	1372	54	1499	59	1626	64	845	33 1/4	838	33
914	36	1524	60	1499	59	1778	70	921	36 1/4	838	33
1016	40	1372	54	1524	60	1626	64	845	33 1/4	883	34 3/4

Type 1R (auto slim doors) - 35.5" opening

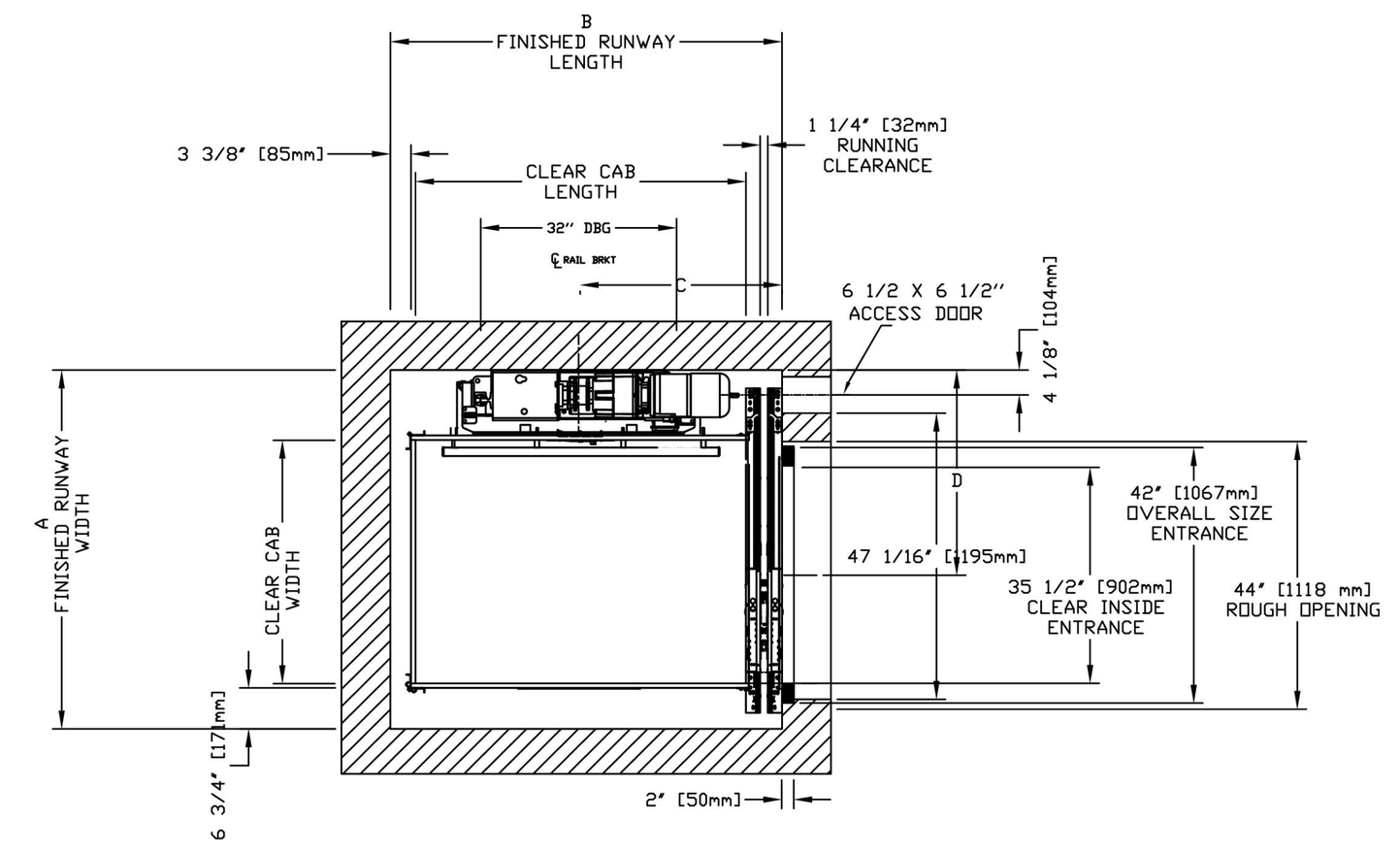

CLEAR INSIDE CAB WIDTH		CLEAR INSIDE CAB LENGTH		A FINISHED RUNWAY WIDTH		B FINISHED RUNWAY LENGTH		C RAIL CENTER LINE		D DOOR CENTER LINE	
mm	Inches	mm	Inches	mm	Inches	mm	Inches	mm	Inches	mm	Inches
914	36	1219	48	1499	59	1473	58	794	31 1/4	838	33
914	36	1372	54	1499	59	1626	64	845	33 1/4	838	33
914	36	1524	60	1499	59	1778	70	921	36 1/4	838	33
1016	40	1372	54	1524	60	1626	64	845	33 1/4	883	34 3/4

Type 2 (auto slim doors) - 35.5" opening

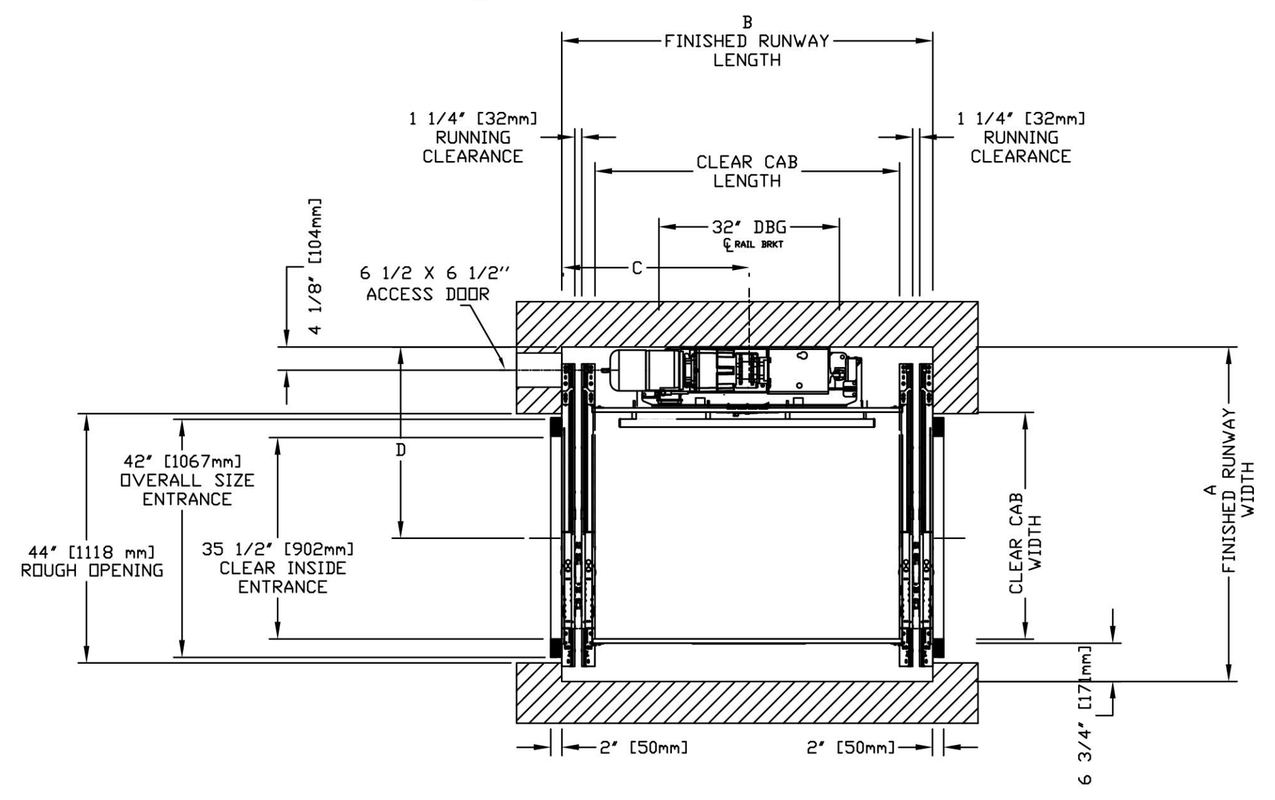

CLEAR INSIDE CAB WIDTH		CLEAR INSIDE CAB LENGTH		A FINISHED RUNWAY WIDTH		B FINISHED RUNWAY LENGTH		C RAIL CENTER LINE		D DOOR CENTER LINE	
mm	Inches	mm		mm	Inches	mm	Inches	mm	Inches	mm	Inches
914	36	1219	48	1499	59	1518	59 3/4	759	29 7/8	838	33
914	36	1372	54	1499	59	1670	65 3/4	835	32 7/8	838	33
914	36	1524	60	1499	59	1822	71 3/4	911	35 7/8	838	33
1016	40	1372	54	1524	60	1670	65 3/4	835	32 7/8	883	34 3/4

Type 3 (auto slim doors) - 35.5" opening

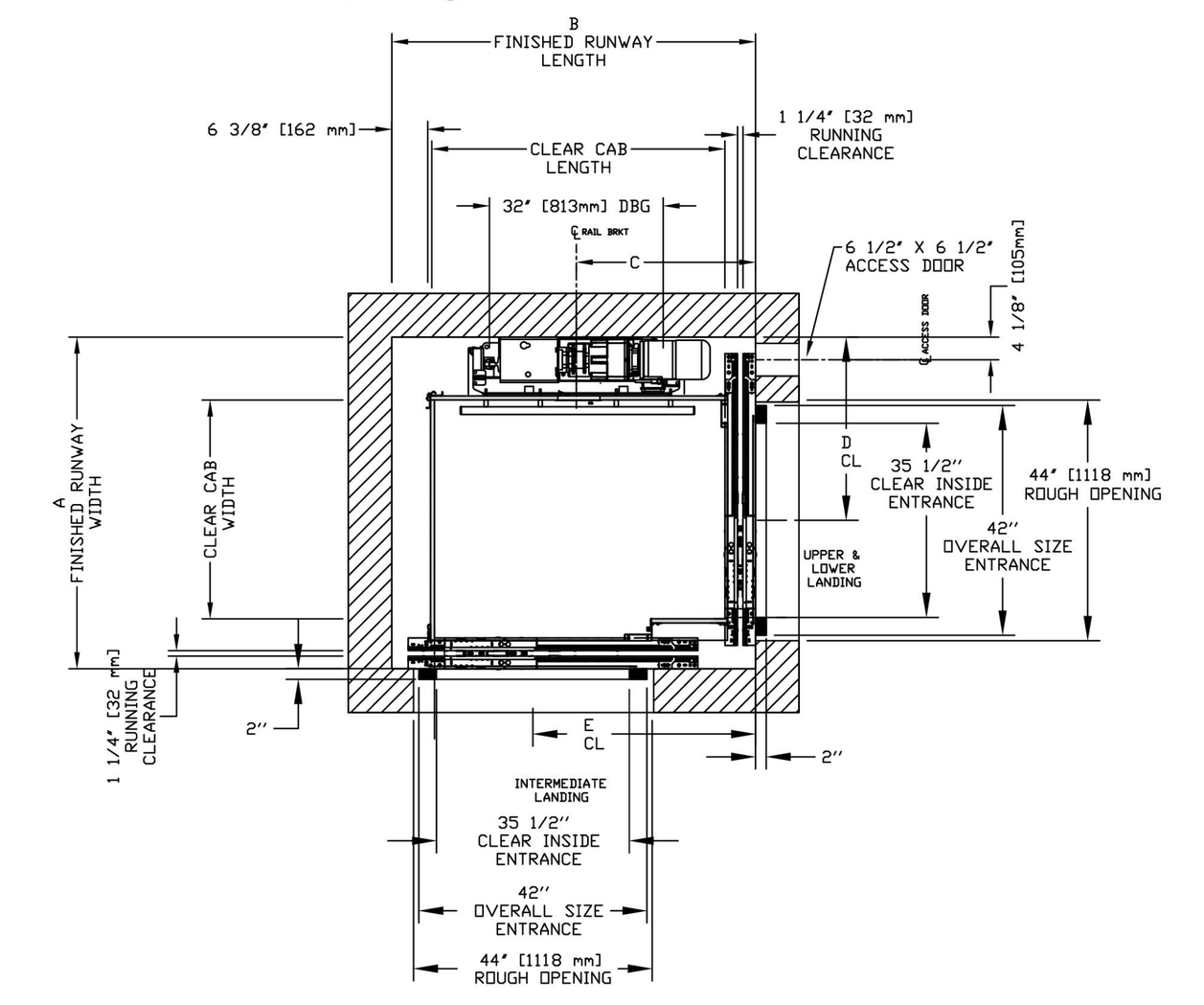

CLEAR INSIDE CAB WIDTH		CLEAR INSIDE CAB LENGTH		A FINISHED RUNWAY WIDTH		B FINISHED RUNWAY LENGTH		C RAIL CENTER LINE		D DOOR CENTER LINE		E DOOR CENTER LINE	
mm	Inches	mm		mm	Inches	mm	Inches	mm	Inches	mm	Inches	mm	Inches
914	36	1372	54	1540	60 5/8	1702	67	838	33	838	33	1064	41 7/8
914	36	1524	60	1540	60 5/8	1854	73	914	36	838	33	1216	47 7/8
1016	40	1372	54	1581	62 1/4	1702	67	838	33	883	34 3/4	1064	41 7/8

Type 4 (auto slim doors) - 35.5" opening

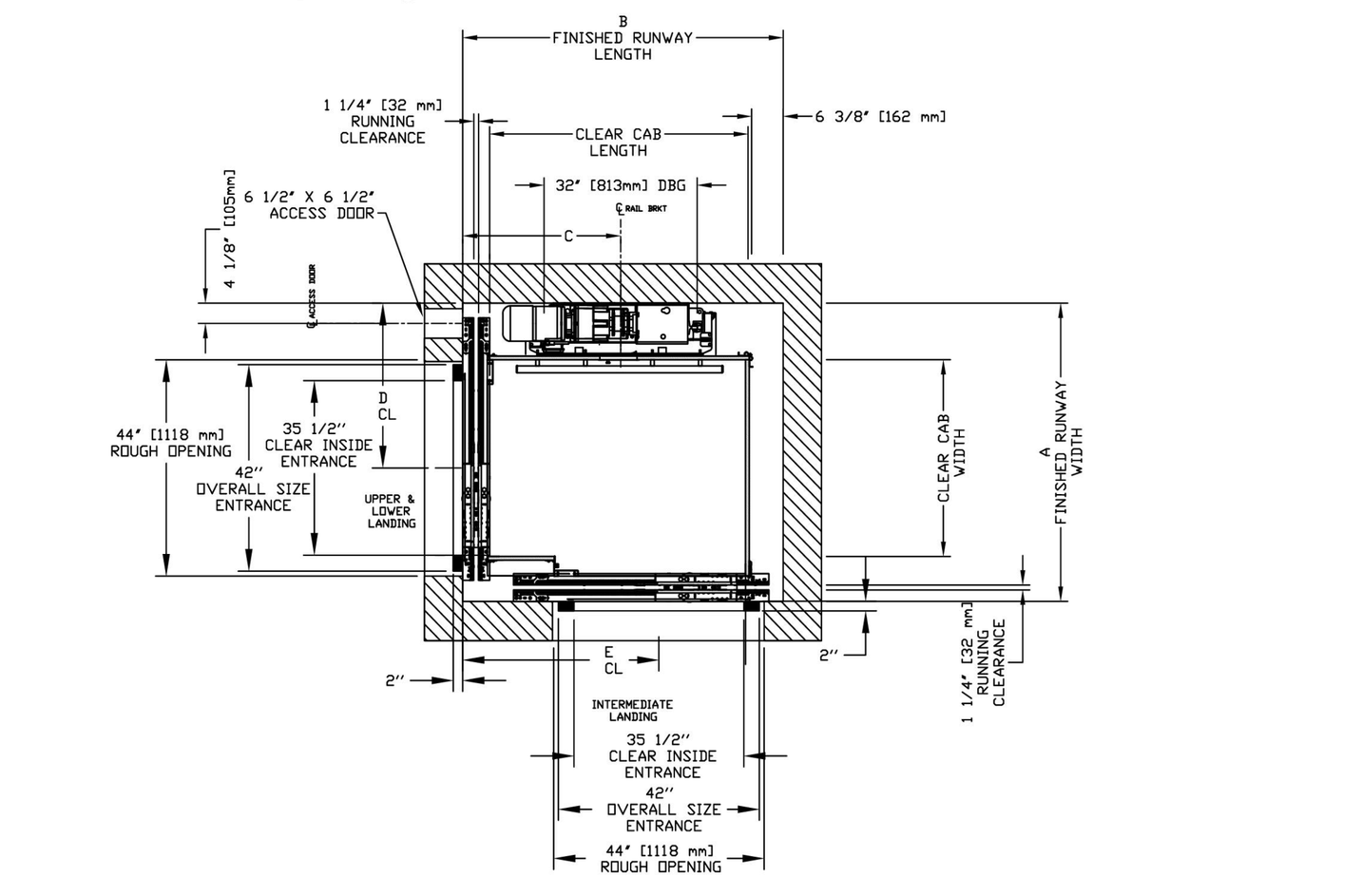

CLEAR INSIDE CAB WIDTH		CLEAR INSIDE CAB LENGTH		A FINISHED RUNWAY WIDTH		B FINISHED RUNWAY LENGTH		C RAIL CENTER LINE		D DOOR CENTER LINE		E DOOR CENTER LINE	
mm	Inches	mm		mm	Inches	mm	Inches	mm	Inches	mm	Inches	mm	Inches
914	36	1372	54	1540	60 5/8	1702	67	838	33	838	33	1064	41 7/8
914	36	1524	60	1540	60 5/8	1854	73	914	36	838	33	1216	47 7/8
1016	40	1372	54	1581	62 1/4	1702	67	838	33	883	34 3/4	1064	41 7/8

Type 5 (auto slim doors) - 35.5" opening

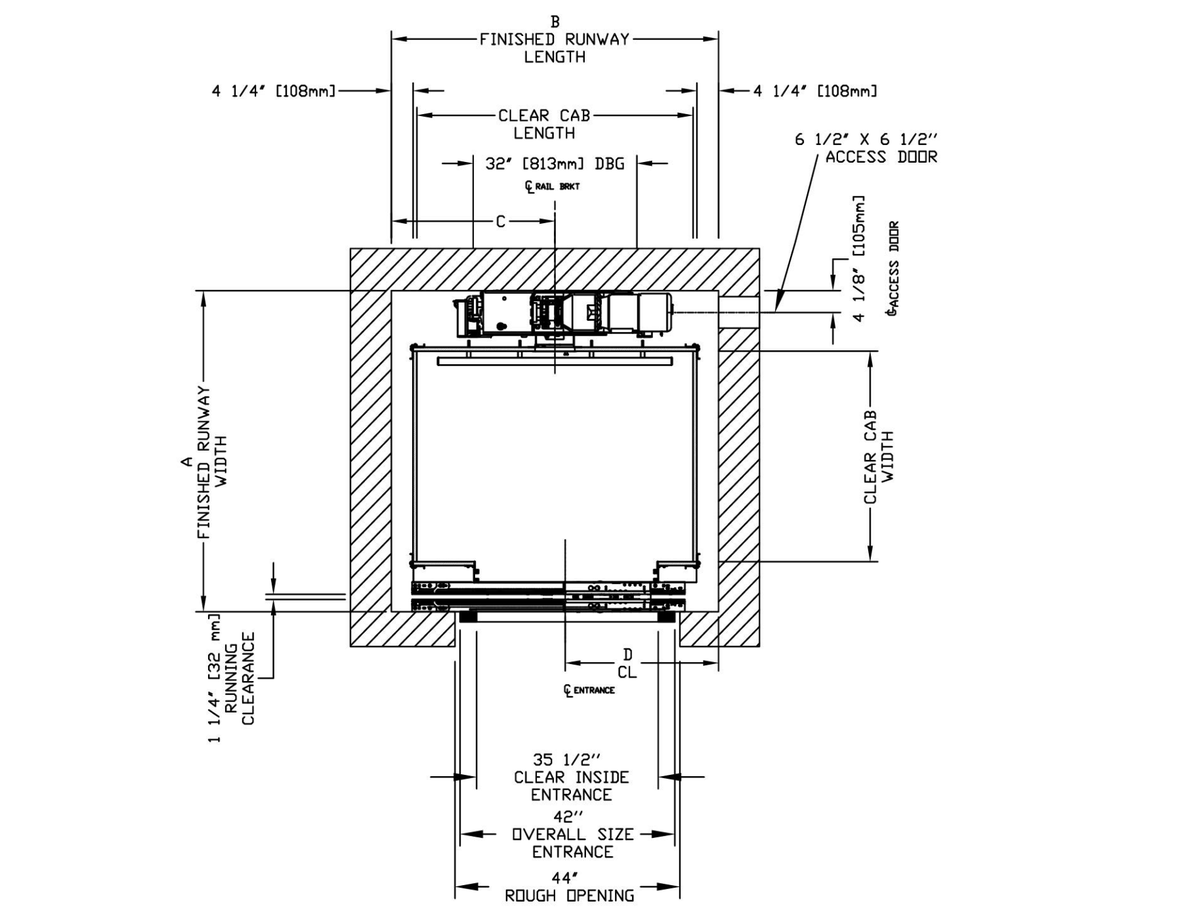

CLEAR INSIDE CAB WIDTH		CLEAR INSIDE CAB LENGTH		A FINISHED RUNWAY WIDTH		B FINISHED RUNWAY LENGTH		C RAIL CENTER LINE		D DOOR CENTER LINE	
mm	Inches	mm		mm	Inches	mm	Inches	mm	Inches	mm	Inches
914	36	1372	54	1486	58 1/2	1626	64	813	32	762	30
914	36	1524	60	1486	58 1/2	1778	70	889	35	762	30
1016	40	1372	54	1588	62 1/2	1626	64	813	32	762	30

Eclipse with auto slim doors 29.5" opening

Type 1L (auto slim doors on car and landing) - 29.5" opening

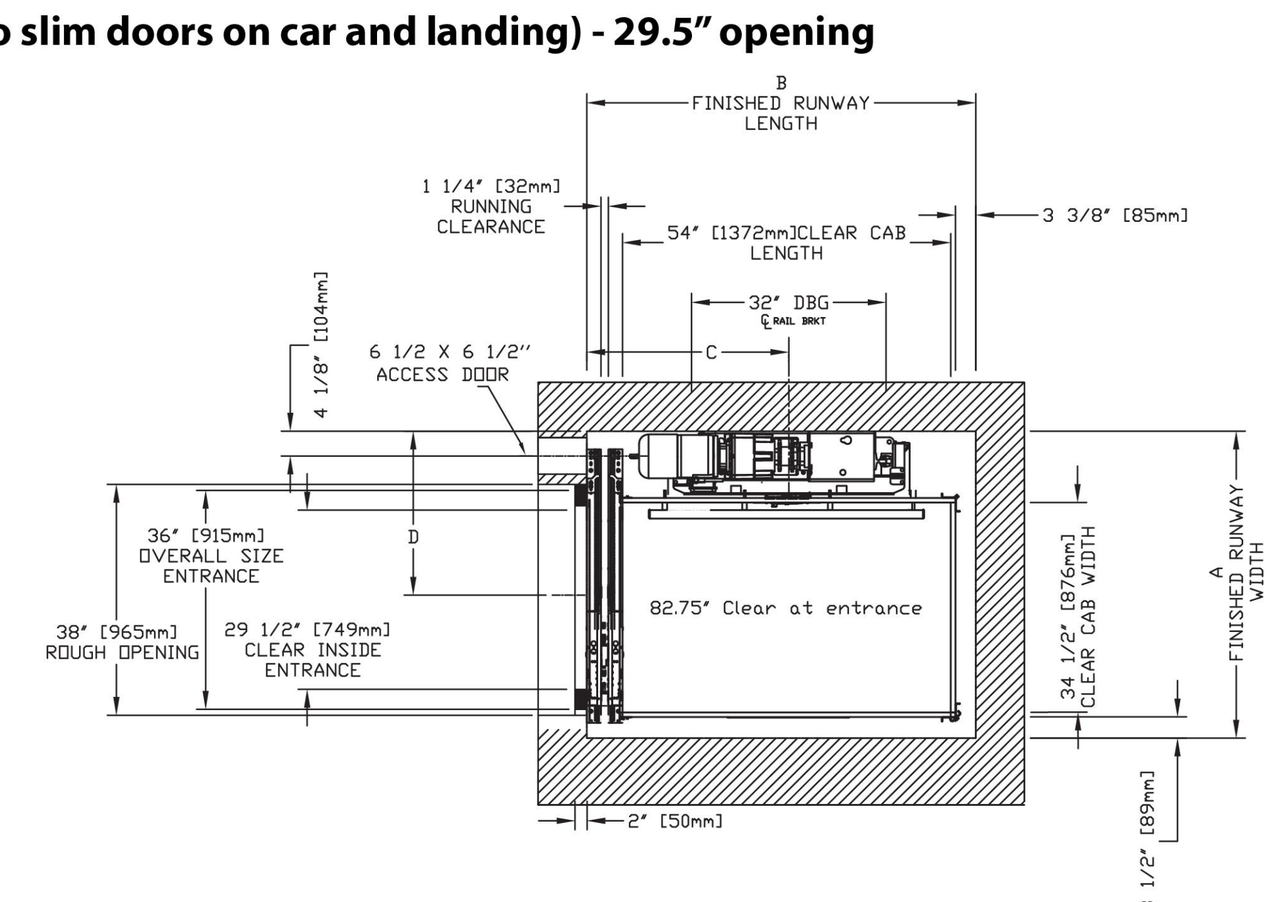

CLEAR INSIDE CAB WIDTH		CLEAR INSIDE CAB LENGTH		A FINISHED RUNWAY WIDTH		B FINISHED RUNWAY LENGTH		C RAIL CENTER LINE		D DOOR CENTER LINE	
mm	Inches	mm	Inches	mm	Inches	mm	Inches	mm	Inches	mm	Inches
876	34 1/2	1219	48	1283	50 1/2	1473	58	794	31 1/4	686	27
876	34 1/2	1372	54	1283	50 1/2	1626	64	845	33 1/4	686	27
876	34 1/2	1524	60	1283	50 1/2	1778	70	921	36 1/4	686	27

Type 1L (auto slim doors on car, swing doors on landing) - 29.5" opening

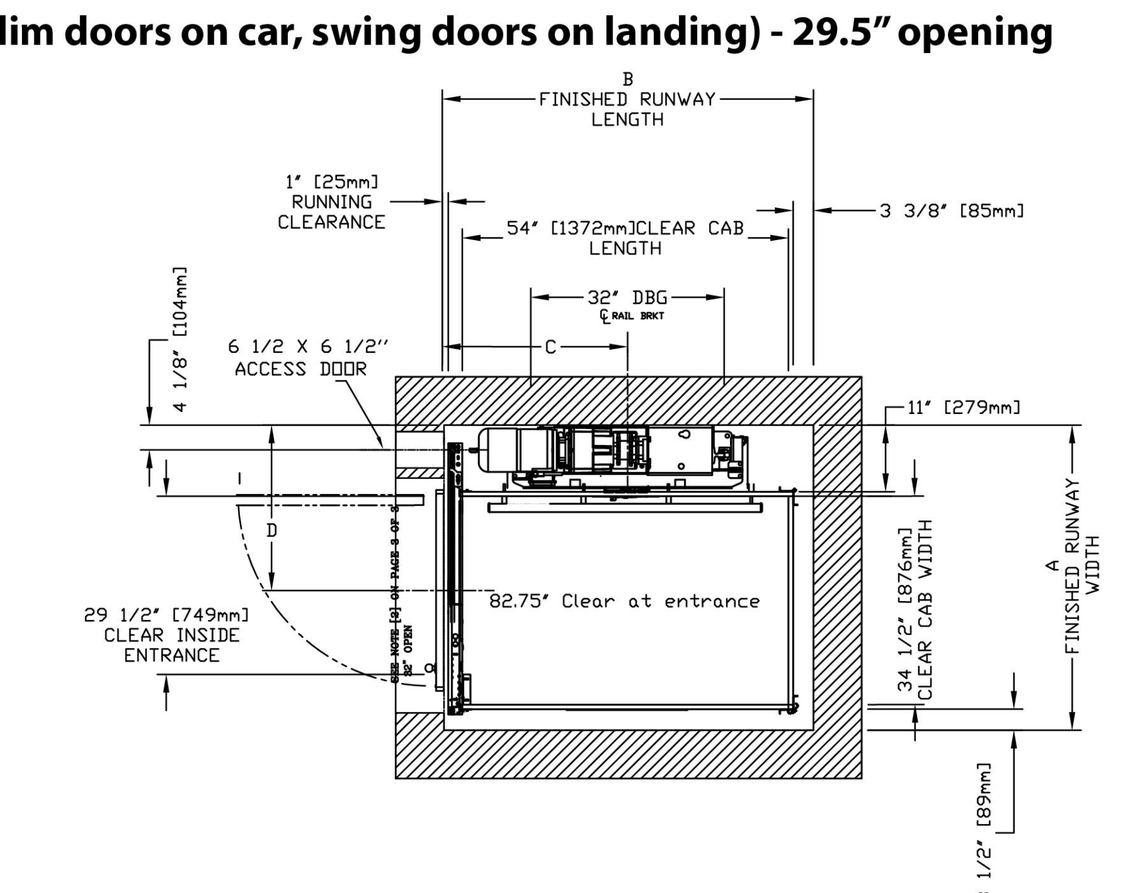

CLEAR INSIDE CAB WIDTH		CLEAR INSIDE CAB LENGTH		A FINISHED RUNWAY WIDTH		B FINISHED RUNWAY LENGTH		C RAIL CENTER LINE		D DOOR CENTER LINE	
mm	Inches	mm	Inches	mm	Inches	mm	Inches	mm	Inches	mm	Inches
876	34 1/2	1219	48	1283	50 1/2	1408	55 7/16	729	28 11/16	695	27 3/8
876	34 1/2	1372	54	1283	50 1/2	1561	61 7/16	779	30 11/16	695	27 3/8
876	34 1/2	1524	60	1283	50 1/2	1713	67 7/16	856	33 11/16	695	27 3/8

Type 1R (auto slim doors on car and landing) - 29.5" opening

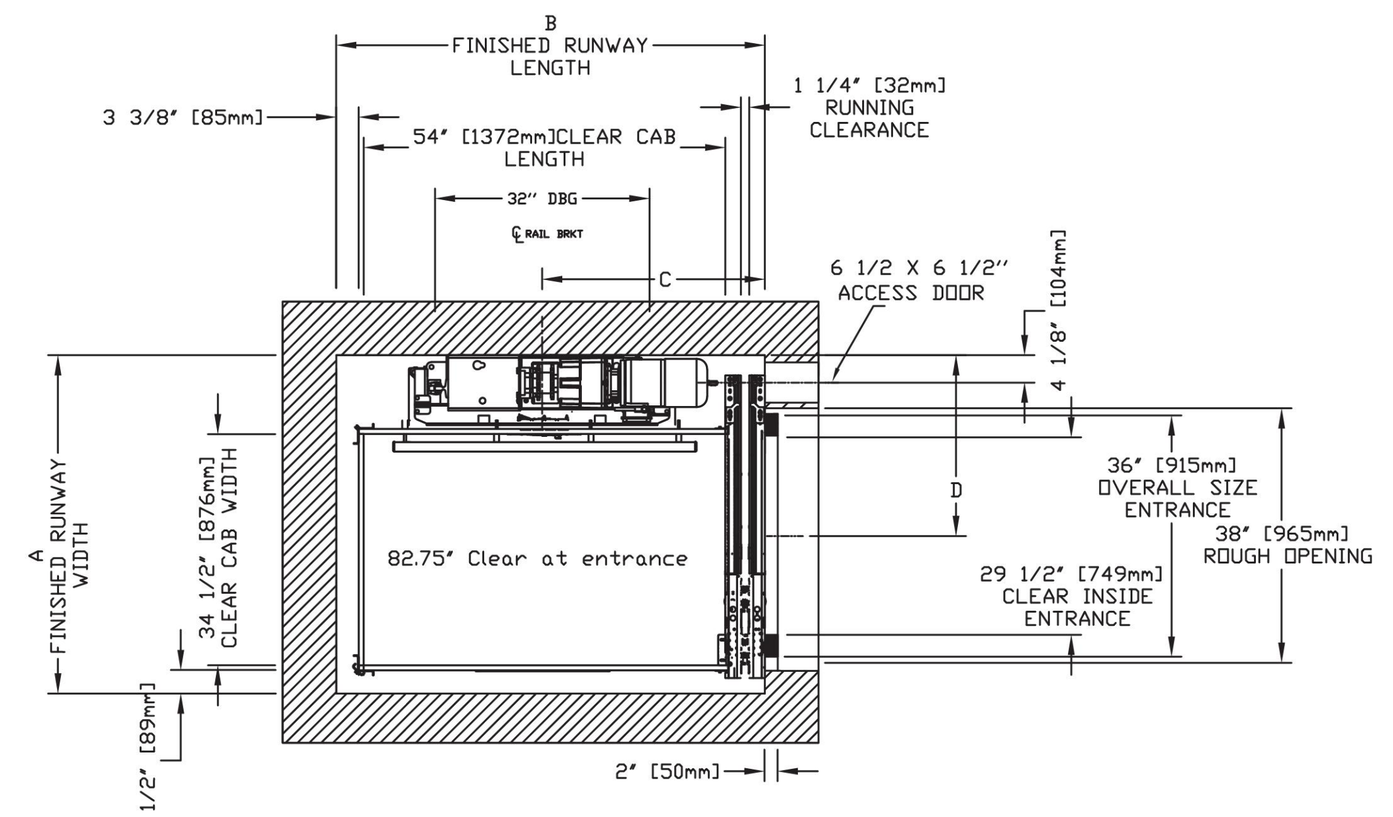

CLEAR INSIDE CAB WIDTH		CLEAR INSIDE CAB LENGTH		A FINISHED RUNWAY WIDTH		B FINISHED RUNWAY LENGTH		C RAIL CENTER LINE		D DOOR CENTER LINE	
mm	Inches	mm	Inches	mm	Inches	mm	Inches	mm	Inches	mm	Inches
876	34 1/2	1219	48	1283	50 1/2	1473	58	794	31 1/4	686	27
876	34 1/2	1372	54	1283	50 1/2	1626	64	845	33 1/4	686	27
876	34 1/2	1524	60	1283	50 1/2	1778	70	921	36 1/4	686	27

Type 1R (auto slim doors on car, swing doors on landing) - 29.5" opening

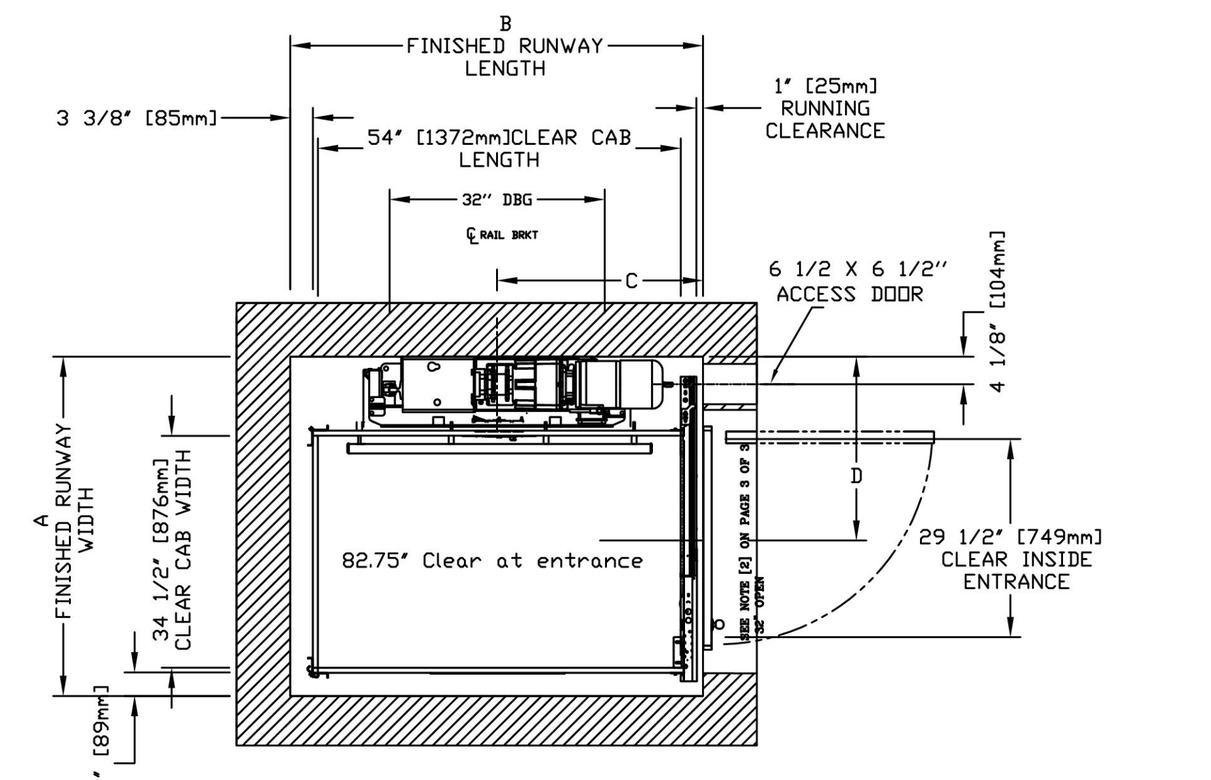

CLEAR INSIDE CAB WIDTH		CLEAR INSIDE CAB LENGTH		A FINISHED RUNWAY WIDTH		B FINISHED RUNWAY LENGTH		C RAIL CENTER LINE		D DOOR CENTER LINE	
mm	Inches	mm	Inches	mm	Inches	mm	Inches	mm	Inches	mm	Inches
876	34 1/2	1219	48	1283	50 1/2	1408	55 7/16	729	28 11/16	695	27 3/8
876	34 1/2	1372	54	1283	50 1/2	1561	61 7/16	779	30 11/16	695	27 3/8
876	34 1/2	1524	60	1283	50 1/2	1713	67 7/16	856	33 11/16	695	27 3/8

Type 2 (auto slim doors on car and landing) - 29.5" opening

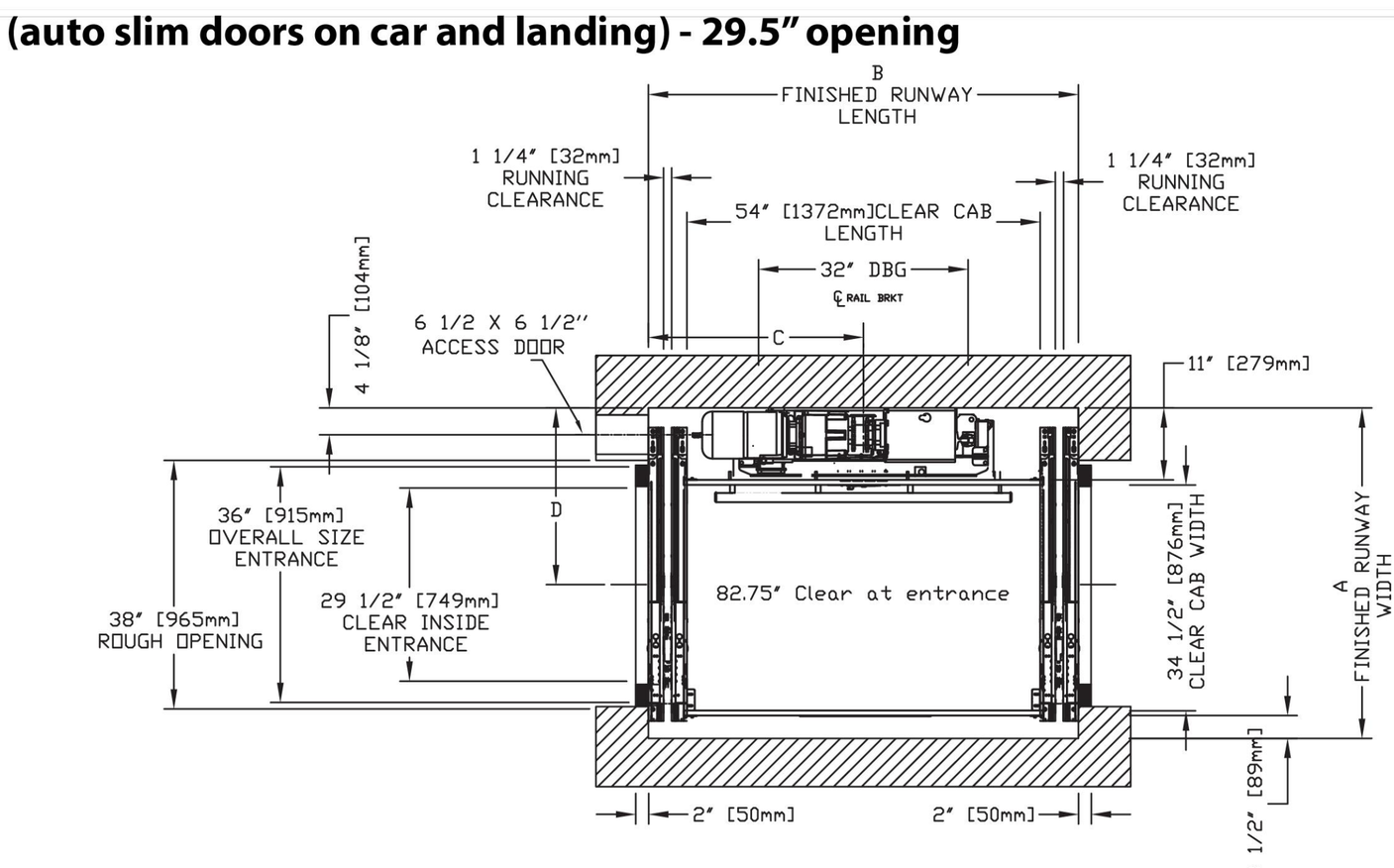

CLEAR INSIDE CAB WIDTH		CLEAR INSIDE CAB LENGTH		A FINISHED RUNWAY WIDTH		B FINISHED RUNWAY LENGTH		C RAIL CENTER LINE		D DOOR CENTER LINE	
mm	Inches	mm		mm	Inches	mm	Inches	mm	Inches	mm	Inches
876	34 1/2	1219	48	1283	50 1/2	1518	59 3/4	759	29 7/8	686	27
876	34 1/2	1372	54	1283	50 1/2	1670	65 3/4	835	32 7/8	686	27
876	34 1/2	1524	60	1283	50 1/2	1822	71 3/4	911	35 7/8	686	27

Type 2 (auto slim doors on car, swing doors on landing) - 29.5" opening

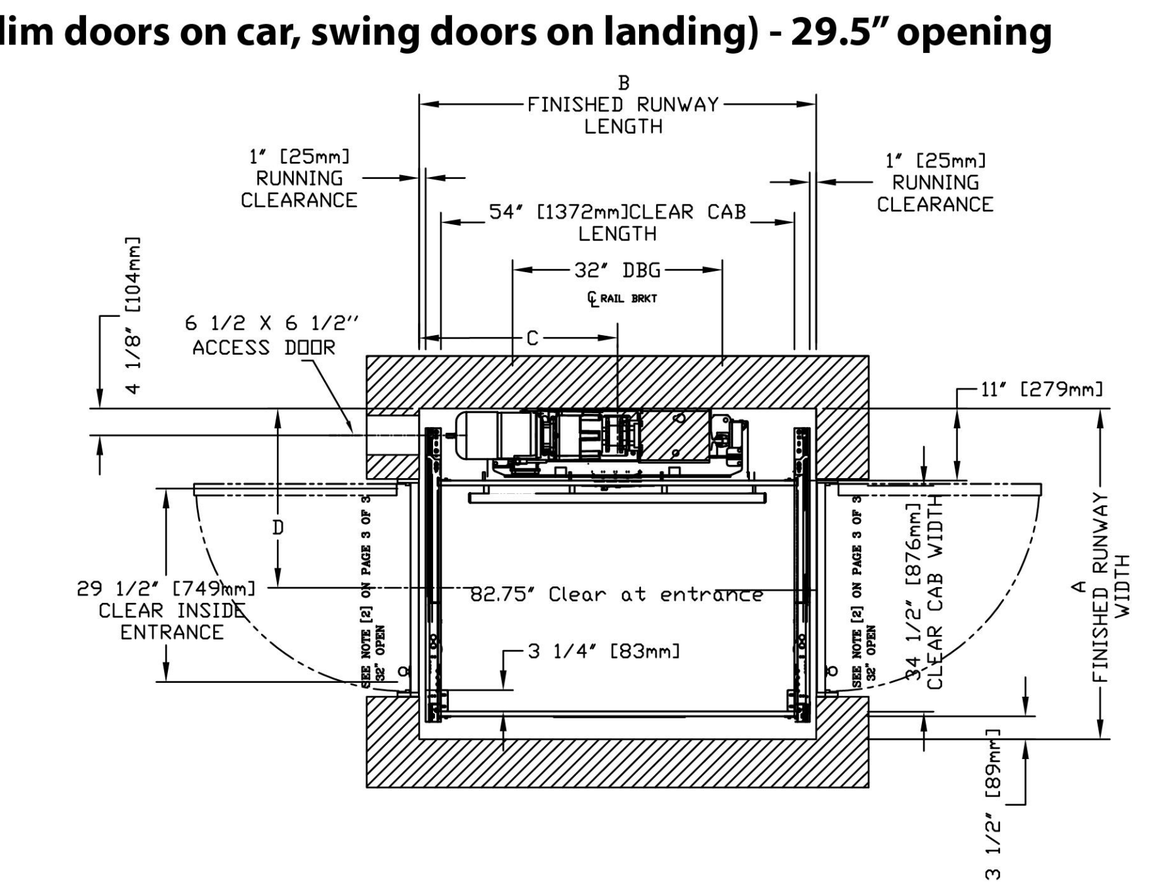

CLEAR INSIDE CAB WIDTH		CLEAR INSIDE CAB LENGTH		A FINISHED RUNWAY WIDTH		B FINISHED RUNWAY LENGTH		C RAIL CENTER LINE		D DOOR CENTER LINE	
mm	Inches	mm		mm	Inches	mm	Inches	mm	Inches	mm	Inches
876	34 1/2	1219	48	1283	50 1/2	1387	54 5/8	694	27 5/16	695	27 3/8
876	34 1/2	1372	54	1283	50 1/2	1540	60 5/8	770	30 5/16	695	27 3/8
876	34 1/2	1524	60	1283	50 1/2	1692	66 5/8	846	33 5/16	695	27 3/8

Type 3 with auto slim doors on car and landing (29.5" opening)

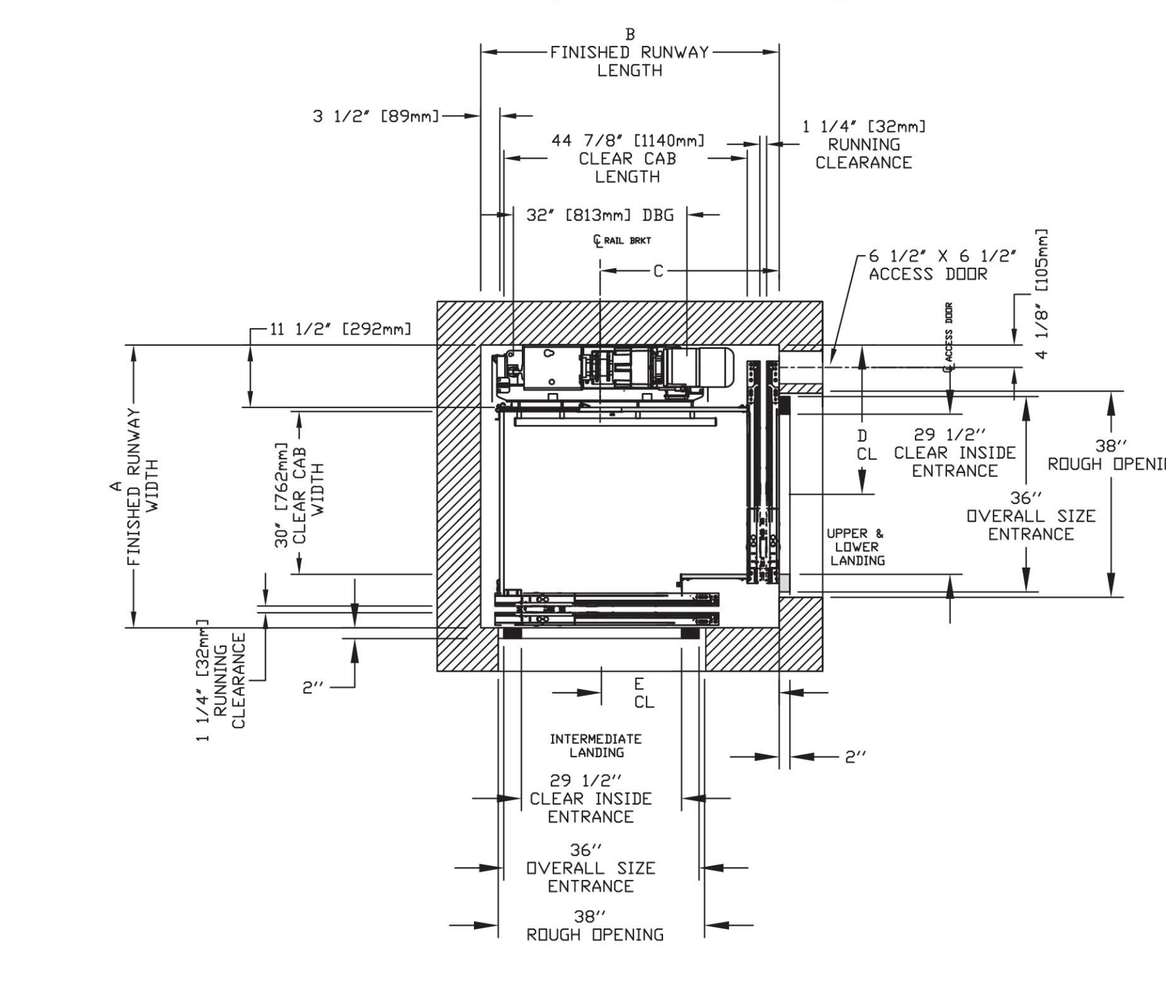

CLEAR INSIDE CAB WIDTH		CLEAR INSIDE CAB LENGTH		A FINISHED RUNWAY WIDTH		B FINISHED RUNWAY LENGTH		C RAIL CENTER LINE		D DOOR CENTER LINE		E DOOR CENTER LINE	
mm	Inches	mm		mm	Inches	mm	Inches	mm	Inches	mm	Inches	mm	Inches
762	30	1140	44 7/8	1324	52 1/8	1397	55	838	33	699	27 1/2	832	32 3/4
762	30	1292	50 7/8	1324	52 1/8	1549	61	838	33	699	27 1/2	984	38 3/4
762	30	1445	56 7/8	1324	52 1/8	1702	67	914	36	699	27 1/2	1137	44 3/4

Type 3 with auto slim doors on car, swing doors on landing (29.5" opening)

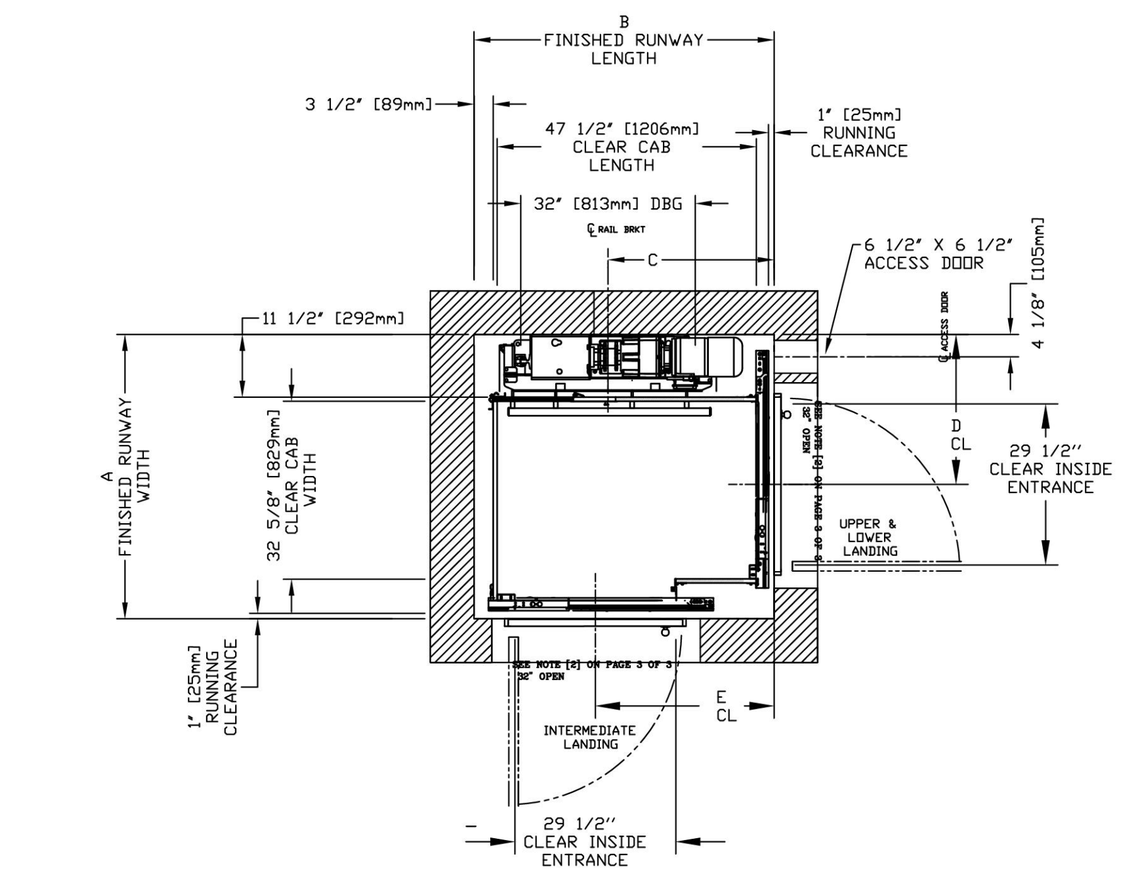

CLEAR INSIDE CAB WIDTH		CLEAR INSIDE CAB LENGTH		A FINISHED RUNWAY WIDTH		B FINISHED RUNWAY LENGTH		C RAIL CENTER LINE		D DOOR CENTER LINE		E DOOR CENTER LINE	
mm	Inches	mm		mm	Inches	mm	Inches	mm	Inches	mm	Inches	mm	Inches
829	32 5/8	1207	47 1/2	1324	52 1/8	1397	55	762	30	699	27 1/2	832	32 3/4
829	32 5/8	1359	53 1/2	1324	52 1/8	1549	61	838	33	699	27 1/2	984	38 3/4
829	32 5/8	1511	59 1/2	1324	52 1/8	1702	67	914	36	699	27 1/2	1137	44 3/4

RF ARCHITECTURE
PH: (253) 359-4039
RICHARD@RFARCHITECTURE.COM
7421 214TH AVE E BONNEYLAKE, WA 98391

6080 REGISTERED ARCHITECT RICHARD W. FLAKE STATE OF WASHINGTON

All drawings, specifications, plans, ideas, arrangements, and designs represented or referred to are the property of and owned by Richard Flake Architect in whether the project for which they are made is executed or not. They were created, evolved, developed and produced for sole use on and in connection with this project and none of the above may be disclosed or given to or used by any person, firm, or corporation for any use or purpose whatsoever including any other project, except upon written permission of Richard Flake Architect.

Copyright 2023
Richard Flake Architect

MURRAY RESIDENCE
NEW SINGLE FAMILY RESIDENCE
4803 FOREST AVE SE
MERCER ISLAND, WA 98040

DESIGN: RWF

DRAWN:

CHECKED: RWF

REVISIONS:

1 PER CITY REVIEW 10-22-2021 REVISIONS

2 PER CITY REVIEW 8-8-2023 REVISIONS

September 15, 2023

ELEV-6

Eclipse hoistway with rail

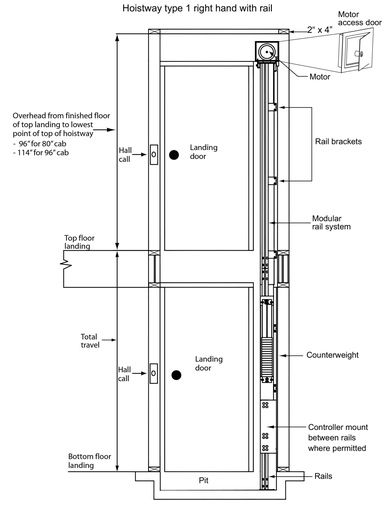

Eclipse hoistway mount

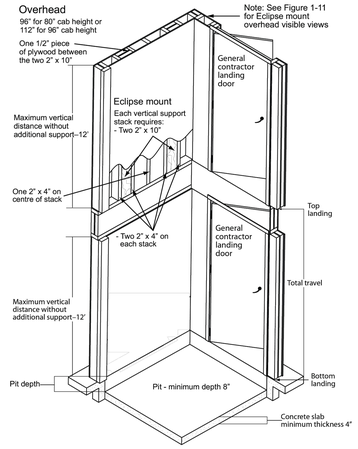

⚠ WARNING

Pipes conveying steam, gas or liquids, which, if discharged into the hoistway would endanger life, shall not be installed in the hoistway.

Eclipse top of hoistway view for wood construction

Structural views for elevator

Overhead view of Eclipse support wall

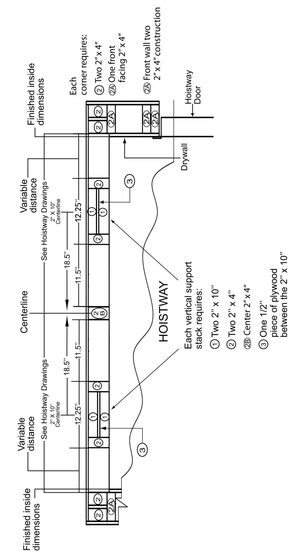

Wall configuration for wood construction (continued)

Structural views for elevator shaft (continued)

Front view of support wall

Eclipse mount load bearing wall

Top of hoistway

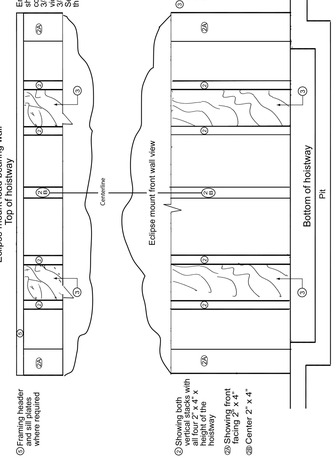

Loads on building and forces on rails

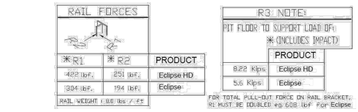

R1: Equal and opposing reaction loads caused by offset suspension means relative to center of mass-top shoes pull out; bottom shoes push in.

R2: Side forces experienced on rail face caused by asymetrical loading.

R3: Downforce on the rail under safety stop conditions.

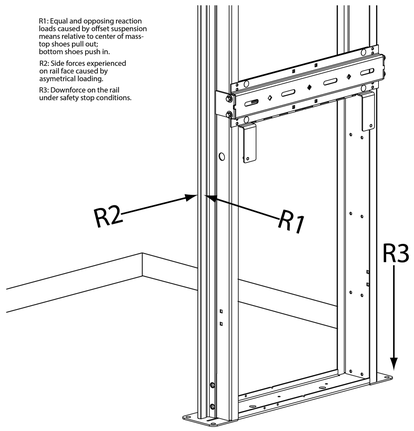

Eclipse electrical requirements

By General Contractor/Owner

Your electrician and phone installer supply the following connections:
Main disconnect - One (1) 230V single-phase disconnect (if voltage is not 230V, minimum 3 Jack-Knife disconnect is required)
Lighting disconnect - One (1) 120V 15 Amp fused disconnect or circuit breaker for cab lighting
Telephone line - One (1) telephone line jack in close proximity to the controller

NOTE: Savaria Corporation does not provide power cable to main disconnect.

Recommended manufacturers for fused disconnect

Square D
- Main disconnect: 230V single-phase disconnect model # H221N
240V - 30 Amp with Interlock Kit - ELK031 Aux Contacts (normally opened/normally closed)
In addition, two each - 250V, 20 Amp, RK5 fuses
- Lighting disconnect - 120V 15 Amp fused disconnect or circuit breaker

Siemens
- Main disconnect: 230V single-phase disconnect model #HF221N
240V - 30 Amp with Interlock Kit-HA 161234 Aux Contacts (normally opened/normally closed)
In addition, two each - 250V, 20 Amp, RK5 fuses
- Lighting disconnect: 120V 15 Amp fused disconnect or circuit breaker

Cutler Hammer
- Main disconnect: 230V single-phase disconnect model #HF221N
240V - 30 Amp with Interlock Kit - THAUX21D Aux Contacts (normally opened/normally closed)
In addition, two each - 250V, 20 Amp, RK5 fuses
- Lighting disconnect: 120V 15 Amp fused disconnect or circuit breaker

Recommended manufacturers for circuit breakers at the distribution panel (and the distribution panel itself): Square D or Siemens only.

Wiring (use as reference)

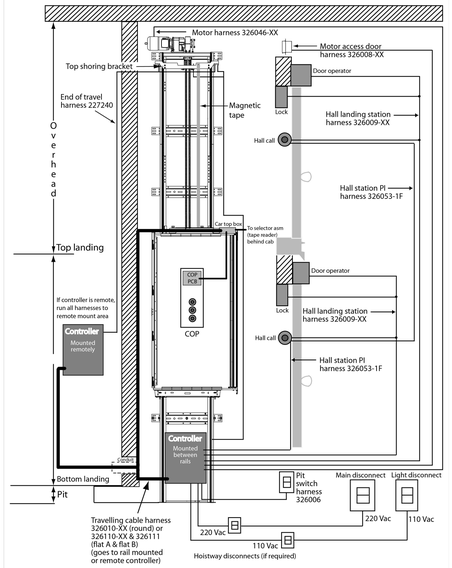

Controller box dimensions

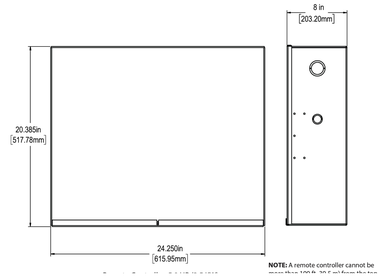

NOTE: A remote controller cannot be

Provisions by others

Savaria Link option

If you have the Savaria Link Ethernet remote monitoring option, ensure that you have an Ethernet connection with Internet capability in the vicinity of the unit's controller.

If you have the Savaria Link Wireless remote monitoring option, ensure that you have a wireless signal with Internet capability in the vicinity of the unit's controller.

RF ARCHITECTURE
PH: (253) 359-4039
RICHARD@RFARCHITECTURE.COM
7421 214TH AVE E BONNEYLAKE, WA 98391

6080
REGISTERED ARCHITECT
RICHARD W. FLAKE
STATE OF WASHINGTON

All drawings, specifications, plans, ideas, arrangements, and designs represented or referred to are the property of and owned by Richard Flake Architect whether the project for which they are made is executed or not. They were created, evolved, developed and produced for sole use on and in connection with this project and none of the above may be disclosed or given to or used by any person, firm, or corporation for any use or purpose whatsoever including any other project, except upon written permission of Richard Flake Architect.

Copyright 2023
Richard Flake Architect

MURRAY RESIDENCE
NEW SINGLE FAMILY RESIDENCE
MERCER ISLAND, WA
98040

DESIGN: RWF
DRAWN: HAVILAND CONSULTING
CHECKED: RWF
REVISIONS:
PER CITY REVIEW 10.22.2021
REVISIONS
PER CITY REVIEW 8.8.2023
REVISIONS

September 15, 2023

ELEV-7

Flush wood door instructions for contractors

METHOD TO BUILD FLUSH DOOR: USING STOPPER ON INSIDE OF DOOR FRAME



HOISTWAY VIEW
WITH 1/8" SHEET-METAL
STOPPER

WARNING: : Lock cut-out in top corner representative of a standard 80" door. For taller doors, such as 84" to 96", the top of the cut-out itself needs to stay at 80" from the ground to allow users access to unlock in case of emergency.

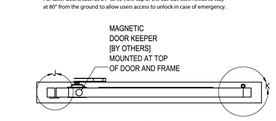

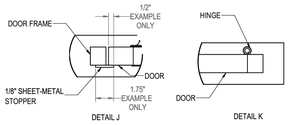

DETAIL J

DETAIL K

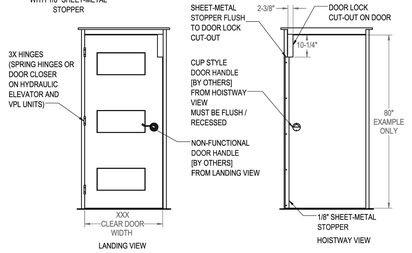

LANDING VIEW

HOISTWAY VIEW

Flush wood door instructions for contractors (cont.)

METHOD TO BUILD FLUSH DOOR USING ANGLE (L) BRACKET STOPPER

WARNING: Lock cut-out in top corner representative of a standard 80" door. For taller doors, such as 84" to 96", the top of the cut-out itself needs to stay at 80" from the ground to allow users access to unlock in case of emergency.



HOUSE VIEW WITH
"L" BRACKET STOPPER





DETAIL M
"L" BRACKET MOUNTED
ON DOOR SLAB

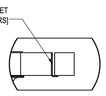

DETAIL P
SCALE 1 : 4

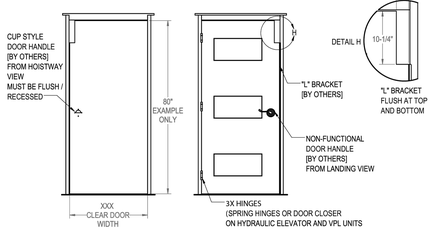

Flush wood door instructions for contractors (cont.)

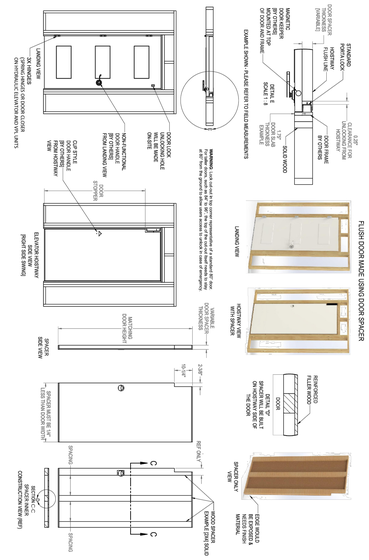

Flush wood door instructions for contractors (cont.)

LOCK CUTOUT DIMENSIONS: FLUSH PORTA
LOCK BRACKET

WARNING: Lock cut-out in top corner representative of a standard 80" door. For taller doors, such as 84" to 96", the top of the cut-out itself needs to stay at 80" from the ground to allow users access to unlock in case of emergency.

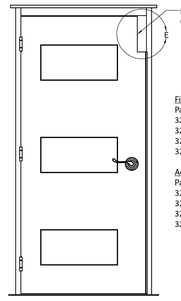

Fixed version kit with lock

Part No.	Description
320269-FR	LOCK_PORTA WOOD DR FLSH, RH ASSY
320269-FL	LOCK_PORTA WOOD DR FLSH, LH ASSY
326589-R	PLATE ONLY, RH
326589-L	PLATE ONLY, LH

Adjustable version kit with lock

Part No.	Description
320269-FAR	LOCK_PORTA WOOD DR FLSH, RH ASSY
320269-FAL	LOCK_PORTA WOOD DR FLSH, LH ASSY
326591-R	PLATE ASSEMBLY ONLY, RH
326591-L	PLATE ASSEMBLY ONLY, LH

LOCK BRACKET OPTIONS:

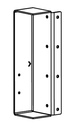

OPTION-1
FOR 1-3/4" DOOR
THICKNESS

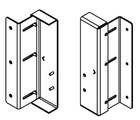

OPTION-2
2 PIECES LOCK
BRACKET FOR 1-1/2" - 2"
DOOR THICKNESS

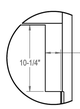

DETAIL E
SCALE 1 : 8

THIS PAGE IS INTENTIONALLY LEFT BLANK

Find more design resources at:
savaria.com

Online configurator
CAD drawings
BIM objects
SpecWizard
Continuing education calendar

Savaria Concord Lifts, Inc.
2 Walker Drive Brampton ON L6T 5E1 Canada

savaria
savaria.com

©2022 Savaria Corporation

RF ARCHITECTURE
PH: (253) 359-4039
RICHARD@RFARCHITECTURE.COM
7421 214TH AVE E BONNEYLAKE, WA 98391

(408) REGISTERED ARCHITECT RICHARD W. FLAKE STATE OF WASHINGTON

All drawings, specifications, plans, ideas, arrangements, and designs represented or referred to are the property of and owned by Richard Flake Architect no whether the project for which they are made is executed or not. They were created, evolved, developed and produced for sole use on and in connection with this project and none of the above may be disclosed or given to or used by any person, firm, or corporation for any use or purpose whatsoever including any other project, except upon written permission of Richard Flake Architect.

Copyright 2023
Richard Flake Architect

IDENCE
RESIDENCE
WA 98040

MURRAY RESIDENCE
NEW SINGLE FAMILY RESIDENCE
MERCER ISLAND, WA

DESIGN:
RWF
DRAWN:
HAVILAND CONSULTING
CHECKED:
RWF
REVISIONS:
PER CITY REVIEW
10.22.2023
REVISIONS
PER CITY REVIEW
8.8.2023
REVISIONS

September 15, 2023

ELEV-8